RECEIVED
JUN 20 2025
STATE OF ALASKA
REGULATORY COMMISSION OF ALASKA

AECA

Alaska Exchange Carriers Association
P O Box 241281
Anchorage, Alaska 99524

Phone: 907-561-6300

Email: aeca@alaska.net
Website: aeca-alaska.com (T)

RECEIVED
December 6, 2024
STATE OF ALASKA
REGULATORY COMMISSION OF ALASKA

ACCESS SERVICES

Table of Contents

	Sheet No.	(T)
Title Sheet	1	(T)
Table of Contents	2	
Location of Tariff	8	(N)
Issuing Carriers	9	
Concurring Carriers	9	
Explanation of Symbols	10	
Explanation of Abbreviations	10	
Reference to Other Tariffs	12	
Reference to Technical Publications	13	
1. Application of Tariff	16	
2. General Regulations		
2.1 Undertaking of the Telephone Company	18	
2.1.1 Scope	18	
2.1.2 Limitations	18	
2.1.3 Liability	19	
2.1.4 Provision of Services	21	
2.1.5 Installation and Termination of Services	21	
2.1.6 Maintenance of Services	22	
2.1.7 Changes and Substitutions	22	
2.1.8 Refusal and Discontinuance of Service	23	
2.1.9 Notification of Service-Affecting Activities	25	
2.1.10 Provision and Ownership of Telephone Numbers	25	
2.1.11 Coordination with Respect to Network Contingencies	25	
2.2 Use	26	
2.2.1 Interference or Impairment	26	
2.2.2 Unlawful Use	26	
2.3 Obligations of the Customer	27	
2.3.1 Damages	27	
2.3.2 Ownership of Facilities	27	
2.3.3 Equipment Space and Power	28	
2.3.4 Availability for Testing	28	
2.3.5 Balance	29	
2.3.6 Design of Customer Services	29	
2.3.7 Reference to the Telephone Company	29	
2.3.8 Claims and Demands for Damages	30	
2.3.9 Jurisdictional Report Requirements	31	

RECEIVED

JUN 16 2011

STATE OF ALASKA
REGULATORY COMMISSION OF ALASKA

ACCESS SERVICES

		Sheet No.	
2.4	Payment Arrangements and Credit Allowance	33	
2.4.1	Payment of Rates, Charges and Deposits	33	
2.4.2	Minimum Periods	39	
2.4.3	Credit Allowance for Service Interruptions	40	
2.4.4	Title or Ownership Rights	43	
2.4.5	Reestablishment of Service Following Fire, Flood or Other Occurrence	43	
2.5	Connections	44	
2.5.1	General	44	
2.6	Definitions	44	
2.7	Audit Provision	60	
2.8	Dispute Resolution	60	
3.	**Carrier Common Line Access Service**	67	
3.1	General Descriptions	67	
3.2	Limitations	68	
3.3	Undertaking of the Telephone Company	68	
3.4	Obligations of the Customer	68	
3.5	Reporting of Access Minutes	70	(T)
3.5.1	Estimating Access Minutes	70.1	
3.6	Rate Regulation	70.3	

RECEIVED
December 6, 2024
STATE OF ALASKA
REGULATORY COMMISSION OF ALASKA

TELEPHONE EXCHANGE CARRIERS OF ALASKA

ACCESS SERVICES

		Sheet No.
4.	**End User Access Service**	79
4.1	General Description	79
4.2	Limitations	79
4.3	Undertaking of the Telephone Company	79
4.4	Payment Arrangements and Credit Allowance	80
5.	**Ordering Options For Switched And Special Access Service**	
5.1	General	84
5.1.1	Ordering Conditions	84
5.1.2	Provision of Other Services	85
5.1.3	Expedited Orders	85
5.2	Access Order	85
5.3	(Reserved for Future Use)	
5.4	Access Order Service Intervals	89.1.3 (T)
5.5	Access Order Change Charges	89.2
5.6	Selection of Facilities for Access Orders	90
5.7	Charges Associated with Access Ordering	90
5.7.1	Access Order Charge	90
5.7.2	Misc. Service Order Charge	92
5.7.3	Service Date Change	94
5.7.4	Design Change	95

RECEIVED
December 6, 2024
STATE OF ALASKA
REGULATORY COMMISSION OF ALASKA

		Sheet No.	
5.8	Minimum Periods and Cancellations	97	
5.8.1	Minimum Periods	97	
5.8.2	Development of Minimum Period Charges	97	
5.8.3	Cancellation of an Access Order	98	
5.8.4	Partial Cancellation Charge	100.1	
6.	**Switched Access Service**	101	
6.1	General	101	
6.2	Rate Categories	101	
6.3	Provision and Description of Switched Access Service Feature Groups	109.3	
6.3.1	Feature Group A (FGA)	109.3	
6.3.2	Feature Group B (FGB)	112	
6.3.3	Feature Group C (FGC)	117	
6.3.4	Manner of Provision	120	
6.3.5	Feature Group D (FGD)	121	
6.4	WATS Access Line	127	
6.5	Transmission Specifications	127	
6.6	Obligation of the Telephone Company	129	
6.6.1	Network Management	129	
6.6.2	(Reserved for Future Use)		(T)
6.6.3	Provision of Service Performance Data	130	
6.6.4	Trunk Group Measurement Reports	130	
6.6.5	Determination of Number of Transmission Paths	130	
6.6.6	Design Blocking Measurement	130	
6.6.7	Design Layout Report	133	
6.6.8	Testing	134	
6.7	Obligations of the Customer	135	
6.7.1	Supervisory Signaling	135	
6.7.2	Trunk Group Measurement Reports	135	
6.8	Rate Regulations	135	
6.8.1	Application of Rates and Charges	135	
6.8.2	(Reserved for Future Use)		(T)
6.8.3	Carrier Common Line Access Service is as set forth in Section 3	141	
6.8.4	Measuring Access Minutes	141	
6.8.5	Application of Rates for Extension Service	150	
6.8.6	Network Blocking	151	
6.8.7	Toll Free Data Base Access Service	151	

RECEIVED

DEC 1 6 2003

State of Alaska
Regulatory Commission of Alaska

ACCESS SERVICES

	Sheet No.	
6.9 Common Switching, Transport Termination and Interim NXX Optional Features	152	
6.9.1 Common Switching Nonchargeable Optional Features	152	
6.9.2 Transport Termination Nonchargeable Optional Features	153.4	
6.9.3 Chargeable Optional Features	153.6	
7. Special Access Service		
7.1 General		
7.1.1 Channel Types	154	
7.1.2 Service Descriptions	154	
7.1.3 Service Configurations	156	
7.1.4 Alternate Use	164	
7.1.5 Special Facilities Routing	164	(T)
7.1.6 Design Layout Report	164	|
7.1.7 Acceptance Testing	165	|
7.1.8 Ordering Options and Conditions	165	(T)
7.2 Rate Regulations	166	
7.2.1 Rate Categories	166	
7.2.2 Types of Rates and Charges	169	
7.2.3 Moves	172	
7.2.4 Mileage Measurement	173	
7.2.5 Facility Hubs	174	
7.2.6 Mixed Use Analog and Digital High Capacity Services	176	
7.3 Surcharge for Special Access Service	178	
7.3.1 General	178	
7.3.2 Application	178	
7.3.3 Exemption of Special Access Service Surcharge	179	
7.3.4 Rate Regulations	180	
7.4 Voice Grade Service	181	
7.4.1 Basic Channel Description	181	
7.4.2 Technical Specifications Packages and Network Channel Interfaces	182	
7.4.3 Chargeable Optional Features and Functions	182	

RECEIVED

DEC 16 2003

State of Alaska
Regulatory Commission of Alaska

ACCESS SERVICES

		Sheet No.	
7.5	Program Audio Service (Closed Circuit)	187	
7.5.1	Basic Channel Description	187	
7.5.2	Technical Specifications Packages and Network Channel Interfaces	188	
7.5.3	Optional Features and Functions	188	(T)
7.6	Video Service (Closed Circuit)	189	
7.6.1	Basic Channel Description	189	
7.6.2	Technical Specifications Packages and Network Channel Interfaces	189	
7.7	Digital Data Service	190	
7.7.1	Basic Channel Description	190	
7.7.2	Technical Specifications Packages and Network Channel Interface	191	
7.7.3	Chargeable Optional Features and Functions	191	

RECEIVED

JUN 1 1 2009

STATE OF ALASKA
REGULATORY COMMISSION OF ALASKA

ACCESS SERVICES

		Sheet No.	
7.8	High Capacity Service	192	
7.8.1	Basic Channel Description	192	
7.8.2	Technical Specification Packages and Network Channel Interfaces	193	
7.8.3	Chargeable Optional Features and Functions	193	
7.9	Synchronous Optical Channel Service	195.1	(N)
7.10	Individual Case Filings	198.4	(L)
8.	**Special Facilities and Specialized Service**	199	
8.1	Description	199	
8.1.1	Diversity	199	
8.1.2	Avoidance	199	
8.1.3	Diversity and Avoidance Combined	199	
8.1.4	Cable-Only Facilities	199	
8.2	Specialized Service or Arrangements	200	
9.	**Additional Engineering, Additional Labor and Miscellaneous Services**	202	
9.1	Additional Engineering	202	
9.2	Additional Labor	202	
9.2.1	Overtime Installation	202	
9.2.2	Overtime Repair	202	
9.2.3	Stand by	203	
9.2.4	Testing and Maintenance with Other Telephone Companies	203	
9.2.5	Testing Services	203	
9.2.6	Other Labor	203	
9.3	Miscellaneous Services	204	
9.3.1	Testing Services	204	
9.3.2	Maintenance of Service	211	
9.3.3	Telecommunications Service Priority	211.1	
9.3.4	Access to Intrastate Interexchange Carriers	212	
9.3.5	Blocking Service	217	
10.	**Special Construction**	219	
10.1	General	219	
10.2	Conditions Requiring Special Construction	219	

RECEIVED
December 6, 2024
STATE OF ALASKA
REGULATORY COMMISSION OF ALASKA

TELEPHONE EXCHANGE CARRIERS OF ALASKA

ACCESS SERVICES

	Sheet No.	
11. Access Service Interfaces and Transmission Specifications	222	
11.1 Switched Access Service	222	
11.1.1 Transport Interface Groups	222	
11.1.2 Standard Transmission Specifications	232	
11.1.3 Data Transmission Parameters	241	
11.2 Special Access Service	245	
11.2.1 Network Channel (NC) Codes	249	
11.2.2 Network Channel Interface (NCI) Codes	257	
12. Public Packet Data Network	275	
12.1 Frame Relay Service	275	
12.1.1 General	275	
12.1.2 Rate Regulations	275.5	
12.1.3 Ethernet Transport Service	276	
13. Rates and Charges		
Index to Rates and Charges	277	
14. Non-Pooling Companies - Rates and Charges		
Index to Non-Pooling Rates and Charges	315	(T)

Issued:
Issued By: Alaska Exchange Carriers Association, Inc
By: Keegan Bernier Title: Executive Director

RECEIVED
JUL 15 2025
STATE OF ALASKA
REGULATORY COMMISSION OF ALASKA

ACCESS SERVICES

LOCATION OF TARIFF

The Alaska Exchange Carriers Association tariff is available for inspection and review during regular business hours at the following location:

Regulatory Commission of Alaska
701 W. 8th Avenue, Suite 300 Anchorage AK 99501

The tariff is also available electronically at: aeca-alaska.com. (T)

RECEIVED
AUG 0 6 2010
STATE OF ALASKA
REGULATORY COMMISSION OF ALASKA

ACCESS SERVICES

ISSUING CARRIERS

Adak Eagle Enterprises LLC dba Adak Telephone Utility
Alaska Telephone Co.
Bettles Telephone, Inc.
Bristol Bay Telephone Cooperative, Inc.
Bush-Tell, Incorporated
Circle Telephone

(D)

North Country Telephone Company
Nushagak Electric & Telephone Cooperative, Inc.
OTZ Telephone Cooperative, Inc.
The Summit Telephone & Telegraph Company of Alaska d/b/a
Summit Telephone Company
United-KUC, Inc.
United Utilities, Inc.
Yukon Telephone Company, Inc.

RECEIVED

MAY 1 7 2013

STATE OF ALASKA
REGULATORY COMMISSION OF ALASKA

ACCESS SERVICES

Explanation of Symbols

(R) to signify reduction.
(I) to signify increase.
(C) to signify changed regulation.
(T) to signify a change in text by no change in rate or regulation.
(S) to signify reissued matter.
(L) to signify matter relocated without change.
(N) to signify new rate or regulation.
(D) to signify discontinued rate or regulation.

Explanation of Abbreviations

ac	Alternating Current	
AECA	Alaska Exchange Carriers Association, Inc.	
ANI	Automatic Number Identification	
AT&T	American Telephone and Telegraph Company	
BD	Business Day	
BHMC	Busy Hour Minutes of Capacity	
CCS	Centum Call Seconds	
CCS	Common Channel Signaling	
CIR	Committed Information Rate	
CN	Charge Number	(N)
CNP	Charge Number Parameter	
CO	Central Office	
Cont'd	Continued	
CPE	Customer Premises Equipment	
CPN	Calling Party Number	
CSP	Carrier Selection Parameter	

RECEIVED
DEC 14 2018
STATE OF ALASKA
REGULATORY COMMISSION OF ALASKA

Explanation of Abbreviations - Cont'd

DA	Directory Assistance
dB	Decibel
dBrmC	Decibel Reference Noise C-Message Weighting
dBrnCo	Decibel Reference Noise C-Message Weighted 0
dc	direct current
DDD	Direct Distance Dialing
DTF	Direct Trunked Facility
DTT	Direct Trunked Termination
EAS	Extended Area Service
EDD	Envelope Delay Distortion
EF	Entrance Facility
EML	Expected Measured Loss
ENS	Essential Network Support (N)
EO	End Office
EPL	Echo Path Loss
ERL	Echo Return Loss
ESALT	Ethernet Switched Access Local Transport
ESS	Electronic Switching System
ESSX	Electronic Switching System Exchange
f	frequency
FCC	Federal Communications Commission
FRAS	Frame Relay Access Service
FX	Foreign Exchange
Hz	Hertz
IC	Interexchange Carrier
ICB	Individual Case Basis
IP	Internet Protocol Signaling
kbps	kilobits per second
kHz	kilohertz
LAN	Local Area Network
LATA	Local Access and Transport Area

RECEIVED

MAY 17 2013

STATE OF ALASKA
REGULATORY COMMISSION OF ALASKA

ACCESS SERVICES

(L)
|
(L)

ma	Milliampers	
Mbps	Megabits per second	
mcs	Microsecond	
MF	Multi-Frequency	
MHz	Megahertz	(N)
MMUC	Minimum Monthly Usage Charge	
MRC	Monthly Recurring Charge	
MT	Metallic	
MTS	Message Telecommunications Service(s)	
NPA	Numbering Plan Area	
NRC	Nonrecurring Charge	
NTS	Non-Traffic Sensitive	
NXX	Three-Digit Central Office Cod	
PBX	Private Branch Exchange	
PCM	Pulse Code Modulation	
PIC	Presubscribed Interexchange Carrier	
PIU	Percent Interstate Usage	(N)
POT	Point of Termination	
PSTN	Public Switched Telephone Network	(N)
PSU	Percent State Usage	(N)
PVC	Permanent Virtual Connection	
PVU	Percent VoIP Usage	(N)
SS7	Signaling System 7	(N)
TSF	Tandem Switched Facility	(N)
TST	Tandem Switched Termination	(N)
TDM	Time Division Multiplexing	(N)
TS	Traffic Sensitive	
TSPS	Traffic Service Position System	
TV	Television	
USOC	Uniform Service Order Code	
VG	Voice Grade	
V&H	Vertical & Horizontal	
WATS	Wide Area Telecommunications Service(s)	

(L) Text relocated to First Revised Sheet 10.1

RECEIVED
NOV 21 1990
State of Alaska
Public Utilities Commission

TELEPHONE EXCHANGE CARRIERS OF ALASKA

ACCESS SERVICES

REFERENCE TO OTHER TARIFFS

Whenever reference is made in this tariff to other tariffs of the Telephone Company, the reference is to the tariffs in force as of the effective date of this tariff, and to amendments thereto and successive issues thereof.

Pursuant to Orders No. 6 & 7 in Docket U-90-26

RECEIVED
APR 30 1997
ALASKA PUBLIC UTILITIES COMM.

TELEPHONE EXCHANGE CARRIERS OF ALASKA

ACCESS SERVICES

REFERENCE TO TECHNICAL PUBLICATIONS

The following technical publications are referenced in this tariff and may be obtained from Bell Communications Research, Inc., Distribution Storage Center, 60 New England Ave., Piscataway, NJ 08854.

Technical Reference:

1. PUB 41451
   Issued: January, 1983 Available: May 17, 1993
2. PUB 41004
   Issued: October, 1973 Available: October, 1973
3. TR-NPL-000334
   Issued: February, 1987
4. TR-NPL-000335
   Issued: February, 1987
5. TR-NPL-000337
   Issued: July, 1987
6. TR-NPL-00341
   Issued: March, 1989
7. SR-ISD-000307
   Issued: March, 1988
8. TR-TSV-001370 (N)
   Issued: May 1993 (N)
9.
10.
11. PUB 62508
    Issued: December, 1983 Available: January, 1984
12. PUB 62310
    Issued: September, 1983 Available: October, 1983
13. PUB 62411
    Issued: September, 1983 Available: October, 1983

The following technical publications are referenced on AECA Tariff Sheet No. 211.1, and may be obtained from National Communications System, Washington, D.C. 20305-2010.

14. NCS Handbook 3-1-2
    Issued July 9, 1990

15. NCS Manual 3-1-1
    Issued July 9, 1990

Tariff Advice No. 34 Effective: June 27, 1997

Issued: _____
Issued By: Alaska Exchange Carriers Association, Inc.
By: [signature] Title: President

RECEIVED
JUN 25 1991
State of Alaska
Public Utilities Commission

ACCESS SERVICES

The following technical publication is referenced in this tariff and may be obtained from the Bell Communication Technical Education Center Room B02, 6200 Route 53, Lisle, IL 60532:

Telecommunications Transmission Engineering
Volume 3 - Networks and Services (Chapters 6 and 7)
Second Edition, 1980
Issued: June, 1980 Available: June, 1980

The following technical publication is referenced in this tariff and may be obtained from the National Exchange Carrier Association, Inc., Director - Tariff and Regulatory Matters, 100 S. Jefferson Road, Whippany, N.J. 07981 and the Federal Communications Commission's commercial contractor.

PUB AS No. 1 - Issue II
Issued: May, 1984 Available: May, 1984
Addendum: March, 1987 (N)

Issued: 6/24/91
Issued By: Alaska Exchange Carriers Association, Inc.
By: [signature] Title: President

RECEIVED
NOV 21 1990
State of Alaska
Public Utilities Commission

TELEPHONE EXCHANGE CARRIERS OF ALASKA

ACCESS SERVICES

RESERVED FOR FUTURE USE

Pursuant to Orders No. 6 & 7 in Docket U-90-26

RECEIVED
APR 30 1997
ALASKA PUBLIC UTILITIES COMM.

TELEPHONE EXCHANGE CARRIERS OF ALASKA

ACCESS SERVICES

1. Application of Tariff

1. This tariff contains regulations, rates and charges applicable to the provision of Carrier Common Line, End User Access, Switched Access and Special Access Services, Public Packet Data Network, and other miscellaneous services offered by issuing or concurring carriers which are members of the Alaska Exchange Carriers Association, Inc. (AECA) to Customer(s). (N)

2. The provision of such services by the Telephone Company as set forth in this tariff does not constitute a joint undertaking with the customer for the furnishing of any service.

3. The Alaska Exchange Carriers Association, Inc. has the primary responsibility for preparing, filing, and supporting this tariff; billing and collecting access charges; handling disputes; and distributing access charge revenues to the individual companies.

RECEIVED
NOV 21 1990
State of Alaska
Public Utilities Commission

TELEPHONE EXCHANGE CARRIERS OF ALASKA

ACCESS SERVICES

1. Application of Tariff (Cont'd)

RESERVED FOR FUTURE USE

Pursuant to Orders No. 6 & 7 in Docket U-90-26

RECEIVED
NOV 21 1990
State of Alaska
Public Utilities Commission

TELEPHONE EXCHANGE CARRIERS OF ALASKA

ACCESS SERVICES

2. General Regulations

2.1 Undertaking of the Telephone Company

2.1.1 Scope

(A) The Telephone Company does not undertake to transmit messages under this tariff.

(B) The Telephone Company shall be responsible only for the installation, operation and maintenance of the service it provides.

(C) The Telephone Company will, for maintenance purposes, test its services only to the extent necessary to detect and/or clear troubles.

(D) Services are provided 24 hours daily, seven days per week, except as set forth in other sections of this tariff.

2.1.2 Limitations

(A) The customer may assign or transfer the use of services under this tariff if there is no interruption in or relocation of services. The assignee or transferee must agree to assume all outstanding indebtedness for services provided under this tariff and any termination liability associated with the services provided. The customer will remain jointly liable with the assignee or transferee for any obligations existing at the time of the assignment.

Prior to assignment, the Telephone Company must acknowledge in writing that all requirements have been met. Acknowledgement will be made within fifteen days after the Telephone Company has been notified of the proposed assignment.

Pursuant to Orders No. 6 & 7 in Docket U-90-26

RECEIVED
NOV 21 1990
State of Alaska
Public Utilities Commission

ACCESS SERVICES

2. General Regulations (Cont'd)

2.1 Undertaking of the Telephone Company (Cont'd)

2.1.2 Limitations (Cont'd)

(B) All services offered in this tariff will be provided on a first-come first-served basis.

2.1.3 Liability

(A) Except in the case of willful misconduct for which the Telephone Company's liability is not limited by this tariff, the Telephone Company's liability for damages shall not exceed an amount equal to the proportionate tariff charge for the period during which the service was affected. This liability for damages shall be in addition to any amounts that may be due the customer as described in Section 2.4.3 following.

(B) The Telephone Company shall not be liable for any act or omission of any other carrier or customer providing a portion of a service, nor shall the Telephone Company for its own act or omission hold liable any other carrier or customer providing a portion of a service.

(C) The Telephone Company is not liable for damages to the customer premises resulting from the furnishing of a service, including the installation and removal of equipment and associated wiring, unless the damage is caused by the Telephone Company's negligence.

(D) Both the Telephone Company and the AECA shall be indemnified, defended and held harmless by the end user against any claim, loss or damage arising from the end user's use of services offered under this tariff, involving:

RECEIVED
NOV 21 1990
State of Alaska
Public Utilities Commission

ACCESS SERVICES

2. General Regulations (Cont'd)

2.1 Undertaking of the Telephone Company (Cont'd)

2.1.3 Liability (Cont'd)

(1) Claims for libel, slander, invasion of privacy, or infringement of copyright arising from the end user's own communications;

(2) Claims for patent infringement arising from the end user's acts combining or using the service furnished by the Telephone Company in connection with facilities or equipment furnished by the end users or Intrastate Carriers (IC) or;

(3) All other claims arising out of any act or omission of the end user in the course of using services provided pursuant to this tariff.

(E) Both the Telephone Company and the AECA shall be indemnified, defended and held harmless by the IC against any claim, loss or damage arising from the IC's use of services offered under this tariff involving;

(1) Claims for libel, slander, invasion of privacy, or infringement of copyright arising from the IC's own communications;

(2) Claims for patent infringement arising from the IC's acts combining or using the service furnished by the Telephone Company in connection with facilities or equipment furnished by the end user or IC or;

RECEIVED

DEC 1 6 2003

State of Alaska
Regulatory Commission of Alaska

ACCESS SERVICES

2. General Regulations (Cont'd)

2.1 Undertaking of the Telephone Company (Cont'd)

2.1.3 Liability (Cont'd)

3. All other claims arising out of any act or omission of the IC in the course of using services provided pursuant to this tariff.

F. The Telephone Company's failure to provide or maintain services under this tariff shall be excused by labor difficulties, governmental orders, civil commotions, criminal actions taken against the Telephone Company, acts of God and other circumstances beyond the Telephone Company's reasonable control, subject to the Credit Allowance for a Service Interruption as set forth in 2.4.4 following.

2.1.4 Provision of Services

The Telephone Company's obligation to furnish the services described in this tariff is dependent upon its ability to provide such services.

LEC will provide the services it is reasonably capable of providing and it will provide a written explanation of its inability to provide services when denying requests for service under this section. (T)

2.1.5 Installation and Termination of Services

The services provided under this tariff (A) will include any entrance cable or drop wiring and wire or intrabuilding cable to that point where provision is made for termination of the Telephone Company's outside distribution network facilities at a protective location inside a customer-designated premises and (B) will be installed by the Telephone Company to such Point of Termination, subject to Section 2.6, Access Network Change Notification.

RECEIVED
NOV 21 1990
State of Alaska
Public Utilities Commission

ACCESS SERVICES

2. General Regulations (Cont'd)

2.1 Undertaking of the Telephone Company (Cont'd)

2.1.5 Installation and Termination of Service (Cont'd)

Wire required within a building to extend Access Service facilities will be provided, at the Customer's request, for which non-recurring charges contained in other local tariff or rate schedules will apply.

2.1.6 Maintenance of Services

The services provided under this tariff shall be maintained by the Telephone Company. The customer or others may not rearrange, move, disconnect, remove or attempt to repair any facilities provided by the Telephone Company, other than by connection or disconnection to any interface means used, except with the written consent of the Telephone Company.

2.1.7 Changes and Substitutions

Except as provided for equipment and systems subject to FCC Part 68 Regulations at 47 C.F.R. section 68.110(b), the Telephone Company may, where such action is reasonably required in the operation of its business, (A) change any facilities used in providing service under this tariff, (B) change minimum protection criteria, (C) change operating or maintenance characteristics of facilities or (D) change operations or procedures of the Telephone Company. The Telephone Company shall not be responsible if the change renders customer furnished services obsolete or requires modification of the customer furnished services. If such change materially affects the operating characteristics of the facility, the Telephone Company

Pursuant to Orders No. 6 & 7 in Docket U-90-26

RECEIVED

SEP 24 1999

State of Alaska
Regulatory Commission of Alaska

ACCESS SERVICES

2. General Regulations (Cont'd)

2.1 Undertaking of the Telephone Company (Cont'd)

2.1.7 Changes and Substitutions (Cont'd)

will provide reasonable notification to the customer in writing. Reasonable time will be allowed for any redesign and implementation required by the changes made.

The Telephone Company will work cooperatively with the customer to determine reasonable notification procedures.

2.1.8 Refusal and Discontinuance of Service

A. Unless the provisions of 2.2.1(B) apply, if a customer fails to comply with 2.1.6, 2.2.2, 2.3.1, 2.3.5, 2.4 or 2.5.1, the AECA shall:

1. Send notice by Certified U.S. Mail to the person designated by that customer to receive such written notice that the AECA will be advising the Telephone company regarding 2.1.8 (A) 2.

2. Thirty calendar days after sending the notice to the customer, advise the Telephone Company to: (C)

   a. Refuse to accept additional applications for service and/or refuse to complete any pending orders for service by the non-complying customer at any time after the date of advising is sent.

   b. Discontinue the provision of the services to the non-complying customer at any time thereafter.

3. In the case of discontinuance, all applicable charges, including termination charges, shall become due and the Telephone

RECEIVED

SEP 24 1999

State of Alaska
Regulatory Commission of Alaska

2. General Regulations

2.1 Undertaking of the Telephone Company (Cont'd)

2.1.8 Refusal and Discontinuance of Service (Cont'd)

Company will deny access to the defaulting IC.

B. At this time the AECA Executive Director will execute upon the delinquent customer's payment bond, letter of credit or cash deposit and initiate any other appropriate legal action. If the Telephone Company does not discontinue the provision of the services involved on the date specified in the thirty (30) calendar days notice, and the customer's noncompliance continues, nothing contained herein shall preclude the Telephone Company's right to discontinue the provision of the services to the non-complying customer without further notice. (C)

In the event the account is not paid in accordance with the thirty (30) calendar days notice and the defaulting IC's service has been discontinued, end user customers will have recourse to dialing 10XXX, or such other dialing arrangements as appropriate for a particular LEC to complete long distance calls through alternate IC's. (C)

C. As soon as a Telephone Company is advised by the AECA to discontinue service to an IC, the Telephone Company will provide a recorded message to all of the IC's end users that the service is terminated. End users will be informed of available dialing alternatives and how to arrange interexchange service through another IC.

RECEIVED
APR 03 1992
State of Alaska
Public Utilities Commission

ACCESS SERVICES

2. General Regulations (Cont'd)

2.1 Undertaking of the Telephone Company (Cont'd)

2.1.8 Refusal and Discontinuance of Service (Cont'd)

(D) For wholesale applications, the wholesale provider may be required to disconnect service from the wholesale user if the Telephone Company does not have the capability to do so. (N)

RECEIVED
NOV 21 1990
State of Alaska
Public Utilities Commission

ACCESS SERVICES

2. General Regulations (Cont'd)

2.1.9 Notification of Service-Affecting Activities

The Telephone Company will provide the customer reasonable notification of service-affecting activities that may occur in normal operation of its business. Such activities may include, but are not limited to, equipment additions, removals, and routine preventative maintenance. Generally, such activities are not individual customer service specific, they affect many customer services. No specific advance notification period is applicable to all service activities. The Telephone Company will work cooperatively with the customer to determine the notification requirements.

2.1.10 Provision and Ownership of Telephone Numbers

The Telephone Company reserves the reasonable right to assign, designate or change telephone numbers associated with Access Services, or the Telephone Company serving central office prefixes associated with such numbers, when necessary in the conduct of its business. Should it become necessary to make a change, the Telephone Company will furnish to the customer six months notice, by certified mail, of the effective date and an explanation of the reason(s) for such change(s).

2.1.11 Coordination with Respect to Network Contingencies

The Telephone Company intends to work cooperatively with the customer to develop network contingency plans in order to maintain maximum network capability following natural or man-made disasters which affect telecommunications services.

Pursuant to Orders No. 6 & 7 in Docket U-90-26

RECEIVED
NOV 21 1990
State of Alaska
Public Utilities Commission

ACCESS SERVICES

2. General Regulations (Cont'd)

2.2 Use

2.2.1 Interference or Impairment

(A) The facilities and equipment provided by the customer which are used in conjunction with Telephone Company facilities in the provision of Access Service shall not interfere with or impair the provision of service by the Telephone Company.

(B) If interference as described in (A) above exists, except for equipment subject to the F.C.C. Part 68 rules in 47 C.F.R. Section 68.108, when practicable, the Telephone Company will notify the customer that service will be temporarily disconnected until the problem is corrected. When prior notice is not practical, the Telephone Company may temporarily disconnect services without prior notification to the customer. The customer will be notified of the action as soon as possible and given the opportunity to correct the problem. During the period of discontinuance, the credit allowance for service interruptions as set forth in 2.4.3 following does not apply.

2.2.2 Unlawful Use

The service provided under this tariff shall not be used for an unlawful purpose.

Pursuant to Orders No. 6 & 7 in Docket U-90-26

RECEIVED
NOV 21 1990
State of Alaska
Public Utilities Commission

ACCESS SERVICES

2. General Regulations (Cont'd)

2.3 Obligations of the Customer

2.3.1 Damages

The customer shall reimburse the Telephone Company for damages to the Telephone Company facilities utilized to provide services under this tariff caused by the negligence or willful act of the customer, or resulting from the customer's improper use of the Telephone Company facilities, or due to malfunction of any facilities or equipment provided by other than the Telephone Company. Nothing in the foregoing provision shall be interpreted to hold one customer liable for another customer's actions. The Telephone Company will, upon reimbursement for damages, cooperate with the customer in prosecuting a claim against the person causing such damage and the customer shall be subrogated to the right of recovery by the Telephone Company for the damages to the extent of such payment.

2.3.2 Ownership of Facilities

Facilities utilized by the Telephone Company to provide service under the provisions of this tariff shall remain the property of the Telephone Company. Such facilities shall be returned to the Telephone Company by the customer, whenever requested, within a reasonable period following the request in as

Pursuant to Orders No. 6 & 7 in Docket U-90-26

RECEIVED
NOV 21 1990
State of Alaska
Public Utilities Commission

ACCESS SERVICES

2. General Regulations (Cont'd)

2.3 Obligations of the Customer (Cont'd)

2.3.2 Ownership of Facilities (Cont'd)

good condition as reasonable wear will permit. Any cost of repair or replacement for unreasonable wear or damage will be billed to the customer who utilized the equipment.

2.3.3 Equipment Space and Power

The customer shall furnish or arrange to have furnished to the Telephone Company, at no charge, equipment space and electrical power required by the Telephone Company to provide services under this tariff at the points of termination of such services. The selection of ac or dc power shall be mutually agreed to by the customer and the Telephone Company. The customer shall also make necessary arrangements in order that the Telephone Company will have access to such space at reasonable times for installing, testing, repairing or removing Telephone Company services.

2.3.4 Availability for Testing

The services provided under this tariff shall be available to the Telephone Company at times mutually agreed upon in order to permit the Telephone Company to make tests and adjustments appropriate for maintaining the services in satisfactory operating condition. Such tests and adjustments shall be completed within a reasonable time. No credit will be allowed for any interruptions involved during such tests and adjustments.

Pursuant to Orders No. 6 & 7 in Docket U-90-26

RECEIVED
NOV 21 1990
State of Alaska
Public Utilities Commission

ACCESS SERVICES

2. General Regulations (Cont'd)

2.3 Obligations of the Customer (Cont'd)

2.3.5 Balance

All signals for transmission over the services provided under this tariff shall be delivered by the customer balanced to ground except for ground start, duplex (DX) and McCulloh-Loop (Alarm System) type signaling and dc telegraph transmission at speeds of 75 baud or less.

2.3.6 Design of Customer Services

Subject to the provisions of 2.1.7 preceding, the customer shall be solely responsible, at its own expense, for the overall design of its services and for any redesigning or rearrangement of its services which may be required because of changes in facilities, operations or procedures of the Telephone Company, minimum protection criteria or operating or maintenance characteristics of the facilities.

2.3.7 Reference to the Telephone Company

The customer may advise End Users that certain services are provided by the Telephone Company in connection with the service the customer furnishes to End Users; however, the customer shall not represent that the Telephone Company jointly participates in the customer's services.

RECEIVED
NOV 21 1990
State of Alaska
Public Utilities Commission

ACCESS SERVICES

2. General Regulations (Cont'd)

2.3 Obligations of the Customer (Cont'd)

2.3.8 Claims and Demands for Damages

The customer shall defend, indemnify and save harmless both the Telephone Company and the AECA from and against any suits, claims, losses or damages, including punitive damages, attorney fees and court costs by third persons arising out of the construction, installation, operation, maintenance, or removal of the customer's circuits, facilities, or equipment connected to the Telephone Company's services provided under this tariff, including, without limitation, Workmen's Compensation claims, actions for infringement of copyright and/or unauthorized use of program material, libel and slander actions based on the content of communications transmitted over the customer's circuits, facilities or equipment, and proceedings to recover taxes, fines, or penalties for failure of the customer to obtain or maintain in effect any necessary certificates, permits, licenses, or other authority to acquire or operate the services provided under this tariff; provided, however, the foregoing indemnification shall not apply to suits, claims, and demands to recover damages for damage to property, death, or personal injury unless such suits, claims or demands are based on the tortious conduct of the customer, its officers, agents or employees. The customer shall defend, indemnify and save harmless both the Telephone Company and the AECA from and against any suits, claims, losses or damages, including punitive damages, attorney fees and court costs by the customer or third parties arising out of any act or omission of the customer in the course of using services provided under this tariff.

Pursuant to Orders No. 6 & 7 in Docket U-90-26

RECEIVED
DEC 20 1990
State of Alaska
Public Utilities Commission

ACCESS SERVICES

2. General Regulations (Cont'd)

2.3 Obligations of the Customer (Cont'd)

2.3.9 Jurisdictional Report Requirements

The Telephone Company cannot in all cases determine the jurisdictional nature of customer traffic and its related access minutes. In such cases the customer may be called upon to provide a projected estimate of its traffic, split between the interstate and intrastate jurisdictions. The following regulations govern such estimates, their reporting by the customer and cases where the Telephone Company will develop jurisdictional percentages.

(A) When a customer orders Switched Access Service(s), the Telephone Company, where the jurisdiction can be determined from the call detail, will determine the customer's Intrastate percentage as follows:

For originating access minutes, the Intrastate percentage will be developed when the Switched Access Service access minutes for that customer are measured by dividing the customer's measured Intrastate access minutes by the Telephone Company's total originating measured access minutes for that customer when the call detail is adequate to determine the appropriate jurisdiction.

When call details are insufficient to determine the jurisdiction for the call, the customer shall supply verifiable access minutes or the Telephone Company will develop the access minutes according to Section 2.3.9(C).

Verifiable terminating Switched Access Service minutes will be measured and provided to the Telephone Company by the customer according to Section 2.3.9(C).

Pursuant to Orders No. 6 & 7 in Docket U-90-26

RECEIVED

MAY 17 2013

STATE OF ALASKA
REGULATORY COMMISSION OF ALASKA

ACCESS SERVICES

2. General Regulations (Cont'd)

2.3 Obligations of the Customer (Cont'd)

2.3.9 Jurisdictional Report Requirements (Cont'd)

B. Except where Telephone Company measured access minutes are used as set forth in (A), preceding, the customer reported intrastate percentage of use as set forth in (A), preceding will be used until the customer reports a different projected intrastate percentage.

The customer shall provide in writing, updates to the intrastate (Percent State Usage - PSU), (Percent VoIP Usage – PVU), and interstate (Percent Interstate Usage - PIU) jurisdictional report on a quarterly basis, by service, and by NXX. The customer shall forward to the Telephone Company a revised report, to be received no later than 15 days after the first of January, April, July and October. The revised report shall show the PSU. PVU and PIU for the past three months ending the last billing cycle of December, March, June and September, respectively, for each service arranged for intrastate use. The PSU and PVU reported in January, April, July and October will be effective on the bill date of each such month and will serve as the basis for the next three months' billing beginning in February, May, August and November, respectively. The customer has the option to provide the report on a monthly basis. If monthly reports are provided, the customer is not required to provide quarterly summaries. (N) (N) (N)

RECEIVED

MAY 1 7 2013

STATE OF ALASKA
REGULATORY COMMISSION OF ALASKA

2. General Regulations (Cont'd)

2.3 Obligations of the Customer (Cont'd)

2.3.9 Jurisdictional Report Requirements (Cont'd)

B. (Continued)

When submitting the PSU or PVU, the customer should include a summary sheet (N) explaining how the PSU or PVU was determined. The customer should calculate its (N) PSU or PVU based on the call detail records it uses to bill its customers. The (N) customer may use a reasonable sampling method. If the customer uses data for less than one month to determine the PSU or PVU given to the Telephone Company, the (N) supporting summary sheet should explain why less than one month's data has been used, and whether the data provided is that which the customer uses to make its internal traffic forecasts and networking decisions. They must explain to the Telephone Company why and if they use the same data for their billing purposes. When a revised PSU or PVU varies by more than five percentage points from the last (N) reported PSU or PVU, the Telephone Company may request an explanation. The (N) customer shall retain for six months the data used in calculating a PSU or PVU given (N) to the Telephone Company. Adjustment factors may be applied in the calculation of PSUs or PVUs only if the factor has been objectively determined based on (N) statistically reliable, Alaska specific data.

RECEIVED

MAY 1 7 2013

STATE OF ALASKA
REGULATORY COMMISSION OF ALASKA

ACCESS SERVICES

2. General Regulations (Cont'd)

2.3 Obligations of the Customer (Cont'd)

2.3.9 Jurisdictional Report Requirements (Cont'd)

C. No prorating or back billing will be done based on the report. However, delayed charges will be billed utilizing the intrastate percentage that was in effect at the time the charges were incurred.

If the customer does not supply the reports the Telephone Company will assume the percentages to be the same as those provided in the last quarterly report. For those cases in which two consecutive quarterly reports have not been received from the customer, AECA may implement the following remedial actions: 1) AECA shall estimate what the correct PSU or PVU should be based upon available billing data; (N) 2) AECA shall retain an Accounting Firm to review the records of the customer to the extent necessary to determine a proper PSU or PVU report. Expenses(s) incurred (N) by AECA necessary to implement Step 2 will be billed to the customer; 3) AECA will report to the Regulatory Commission of Alaska of any remedial action required. (C)

RECEIVED

MAY 1 7 2013

STATE OF ALASKA
REGULATORY COMMISSION OF ALASKA

ACCESS SERVICES

2. General Regulations (Cont'd)

2.3 Obligations of the Customer (Cont'd)

2.3.9 Jurisdictional Report Requirements (Cont'd)

D. Jurisdictional Report Verification (N)

If the Telephone Company disputes the reasonableness of the PSU or PVU provided as described in (A) above, or, either AECA or the RCA questions the projected intrastate percentage, the Telephone Company will ask the customer to provide the data as described in (A) above that the customer used to determine the projected intrastate percentage. The customer shall supply the data within 15 days of the Telephone Company request. The customer shall keep records of call detail from which the percentage of intrastate and interstate use can be ascertained and upon request of the Telephone Company make the records available for inspection as reasonably necessary for purposes of verification of the percentages. (C)

If the Telephone Company wishes to audit a PSU or PVU, it must request an audit within six months of having received the PSU or PVU. The audit would be limited to examination of billing tapes used in calculating the PSU or PVU and verification that the tapes accurately represent the carrier's traffic. (N) (N)

RECEIVED
APR 0 8 1993
State of Alaska
Public Utilities Commission

ACCESS SERVICES

2. General Regulations (Cont'd)

2.3 Obligations of the Customer (Cont'd)

2.3.9 Jurisdictional Report Requirements (Cont'd)

(E) Maintenance of Customer Records (N)

For purposes of determining PSU, every call entering a customer switched network that originates at a point within the same state as that in which the called station is situated, is an intrastate communication, and every call entering the customer switched network that originates in a state other than that where the called station is situated is an interstate communication. (N)

RECEIVED

NOV 1 9 2010

STATE OF ALASKA
REGULATORY COMMISSION OF ALASKA

ACCESS SERVICES

2. General Regulations (Cont'd)

2.4 Payment Arrangements and Credit Allowance

2.4.1 Payment of Rates, Charges and Deposits

A. The AECA will require a deposit as a precondition of intrastate service as follows:

1. Certificated Interexchange Carriers:

   A cash deposit, payment bond issued by a surety, or letter of credit from a bank ("deposit") in a form acceptable to the AECA in an amount equal to two and one-half times the IC's estimated total monthly charges under this tariff will be required of all ICs. The failure of an IC to maintain such a deposit shall constitute reasonable grounds for terminating service to the IC. After an IC has received service for two months, the Executive Director may authorize an adjustment in the amount of the deposit based upon the IC's actual charges. Such adjustments may be made as often as is reasonably required to protect the revenue receipts and cash flow of the AECA. (T) (R) (T) (T)

2. Resellers:

   Reserved For Future Use.

3. End Users:

   A cash deposit not to exceed the actual or estimated rates and charges for the service for a two month period (See Alaska Administrative Code 3 AAC 48.420) will be required of all end users.

   End User deposits retained by the Telephone Company will be refunded after a two year period in accordance with Alaska Administrative Code 3 AAC 48.420.

RECEIVED
JUN 21 2021
STATE OF ALASKA
REGULATORY COMMISSION OF ALASKA

ACCESS SERVICES

2. General Regulations (Cont'd)

2.4 Payment Arrangements and Credit Allowance (Cont'd)

2.4.1 Payment of Rates, Charges and Deposits (Cont'd)

A. (Cont'd)

The fact that a deposit has been made in no way relieves the customer from complying with the AECA regulations as to the prompt payment of bills. At such time as the provision to the Customer is terminated, the amount of the deposit will be credited to the Customer's account and any credit balance which may remain will be refunded.

Cash deposits will be paid interest at the time the deposit is refunded. Deposits will be placed in an interest bearing account and the AECA will pay the Customer interest in accordance with AS 42.05.365.

B. The Telephone Company will bill monthly, in arrears, the customer who places the order for access service for all usage sensitive charges. The carrier common line access charges will be billed as Essential Network Support, as set forth in 2.4.1.(B).1, following. Nonrecurring charges will be billed to the customer ordering the service in the month following the provision of service.

The Exchange Carrier will bill in advance for:

Special Access

Special Construction

The Exchange Carrier will bill in arrears for:

Equal Access Recovery Charge

Toll Free Data Base Access Service Queries (T)

Presubscription Change Charge

RECEIVED

DEC 14 2018

STATE OF ALASKA
REGULATORY COMMISSION OF ALASKA

2. General Regulations (Cont'd)

2.4 Payment Arrangements and Credit Allowance (Cont'd)

2.4.1 Payment of Rates, Charges and Deposits (Cont'd)

B. (Cont'd)

The AECA will bill in arrears for:

Essential Network Support (D) (N)
Traffic Sensitive Charges
Non Recurring Charges
TSP Database Charge

1. The Essential Network Support will be billed to the Alaska Universal Service Administrative Company (AUSAC). (D) (N)

2. The bill date for Traffic Sensitive, Non Recurring and TSP Database services will be the 10th work day of the month for each Customer account and shall appear on the carrier access bill.

RECEIVED
NOV 21 1990
State of Alaska
Public Utilities Commission

ACCESS SERVICES

2. General Regulations (Cont'd)

2.4 Payment Arrangements and Credit Allowance (Cont'd)

2.4.1 Payment of Rates, Charges and Deposits (Cont'd)

(B) (Cont'd)

(2) (a) Payment is due and payable upon receipt and shall be delinquent 20 calendar days from the date the bill is rendered, or by the next bill date, whichever is the shortest interval. Payments due AECA of sums greater than $500.00 shall be made by wire transfer or Electronic Funds Transfer (EFT) directly to AECA's bank account on or before the twentieth calendar day from the date the bill was rendered. If this due date is a local bank holiday, funds shall be wire transferred or EFT on the prior workday. Payments of $500.00 or less may be paid via check mailed in time to arrive at AECA's office no later than the twentieth calendar day from the date the bill was rendered.

If EFT is technically not feasible, payment will be made by check mailed prior to the due date with "immediately available funds" as defined in Section 2.6 on the due date. Otherwise penalties as defined in Section 2.4.1 (B) apply.

(b) If payment is not received in immediately available funds by the due date as determined in (a) above, a one time one percent (1%) late payment, plus interest at the rate of .000287 per day, calculated on the total amount due will be charged and included as a separate item on the next statement issued to the customer.

Pursuant to Orders No. 6 & 7 in Docket U-90-26

RECEIVED
DEC 20 1990
State of Alaska
Public Utilities Commission

ACCESS SERVICES

2. General Regulations (Cont'd)

2.4 Payment Arrangements and Credit Allowance (Cont'd)

2.4.1 Payment of Rates, Charges and Deposits (Cont'd)

(B) (Cont'd)

(2) (c) In the event that a billing dispute concerning charges billed to the customer by the AECA or the Telephone Company occurs, the customer is required to pay both the disputed and undisputed amounts by the due date. If the dispute is resolved in favor of the customer, the billing entity will refund the disputed amount in question plus interest.

When a claim is filed within 90 days of the due date, the interest period shall begin on the payment date. When a claim is filed more than 90 days after the due date, the penalty interest period shall begin from the date of the claim or the date of overpayment, whichever is later. Interest will be calculated at a rate equal to .000287 per day, or the maximum interest allowed by state law. The lesser amount will apply. Applicable interest will be compounded daily.

(d) All actions by the AECA or the Telephone company to recover its charges, or any part thereof, shall be initiated within one year from the time the charges were incurred by the customer. For the purposes of this subsection (d), rendering an access bill to the customer is sufficient action.

Pursuant to Orders No. 6 & 7 in Docket U-90-26

RECEIVED

JUN 1 6 2011

STATE OF ALASKA
REGULATORY COMMISSION OF ALASKA

ACCESS SERVICES

2. General Regulations (Cont'd)

2.4 Payment Arrangements and Credit Allowance (Cont'd)

2.4.1 Payment of Rates, Charges and Deposits (Cont'd)

B. (Cont'd)

2.

e. In order for a customer to be eligible for recovery of overcharges of a disputed amount, notification must be submitted by the customer in writing to the Alaska Exchange Carriers Association or Telephone Company within 18 months from the date that the bill under dispute was rendered. (T)

f. The terms "overcharges" or "disputed amounts", as used in Section 2.4.1(B)(2)(e) preceding, shall be deemed to mean charges for service(s) in excess of those applicable thereto under other sections of this tariff.

g. The term "notification", as used in 2.4.1(B)(2)(e) preceding, shall mean written notice containing the date(s) of the overcharges(s), the service(s) for which the overcharges(s) accrued, and the amount(s) of the overcharge(s), delivered by Certified U.S. Mail to the billing entity business office, or its agent.

RECEIVED

SEP 24 1999

State of Alaska
Regulatory Commission of Alaska

2. General Regulations (Cont'd)

2.4 Payment Arrangements and Credit Allowance (Cont'd)

2.4.1 Payment of Rates, Charges and Deposits (Cont'd)

B. (Cont'd)

h. If the customer does not receive a bill at least 10 days prior to the payment due date, then the bill shall be considered delayed. When the bill has been delayed, upon request of the customer the due date will be extended by the number of days the bill was delayed. Such request of the customer must be accompanied with proof of late bill receipt.

i. If a company fails to pay assessed access charges in accordance with the terms and conditions of this tariff, AECA may bring necessary or appropriate legal action before the Regulatory Commission of Alaska (RCA) or a court of competent jurisdiction, to collect sums owing under this tariff. AECA shall assess the defaulting party AECA's actual, reasonable attorney's fees and costs associated with its enforcement effort and actions, to the extent allowed by the RCA or court of competent jurisdiction (N) (N)

RECEIVED
APR 16 1991
State of Alaska
Public Utilities Commission

TELEPHONE EXCHANGE CARRIERS OF ALASKA

ACCESS SERVICES

2. General Regulations (Cont'd)

2.4 Payment Arrangements and Credit Allowance (Cont'd)

2.4.1 Payment of Rates, Charges and Deposits (Cont'd)

(C) Billing, Payment, and Cutoff Illustration

(1) In accordance with 2.4.1(B) and 2.1.8 the Bill date, payment date, and cutoff dates are illustrated as follows:

EXAMPLE: CALCULATION OF PAYMENT DATES

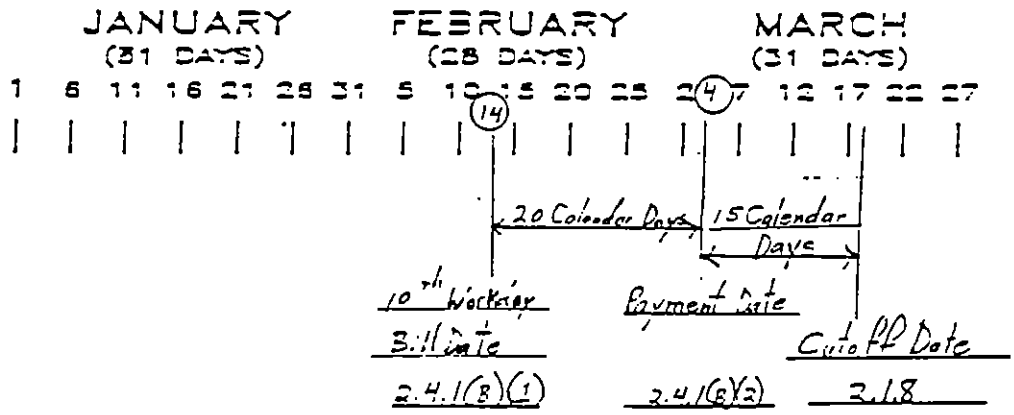

(D) For services provided on a monthly basis, the charge for the provision of a fractional month's service will be determined by dividing the number of days that service was provided by 30 and multiplying the result times the monthly rate. This calculation will be made subject to any minimum service periods required for specific services.

(E) When a rate as set forth in this tariff is shown to more than two decimal places, the charges will be determined using the rate shown. The resulting amount will then be rounded to the nearest penny (i.e., rounded to two decimal places).

RECEIVED
NOV 21 1990
State of Alaska
Public Utilities Commission

TELEPHONE EXCHANGE CARRIERS OF ALASKA

ACCESS SERVICES

2. General Regulations (Cont'd)

2.4 Payment Arrangements and Credit Allowance (Cont'd)

2.4.2 Minimum Periods

(A) Unless a minimum service period is described for a specific tariff item, the minimum period for which services are provided and for which rates and charges are applicable is one month. When a service is discontinued prior to the expiration of the minimum period, the total charges at the rate level in effect at the time service is discontinued will apply for the remainder of the minimum period.

If the discontinued service is provided based on usage, the AECA will estimate usage to the end of the minimum period based on historical data.

(B) Proration of Charges

Adjustments for the quantities of services established or discontinued in any billing period beyond the minumum period set forth for services in other sections of this tariff will be prorated to the number of days based on a 30 day month. The Telephone Company will, upon request, furnish within 30 days of a request and at no charge to the customer such detailed information as may reasonably be required for verification of any bill.

Pursuant to Orders No. 6 & 7 in Docket U-90-26

RECEIVED
NOV 21 1990
State of Alaska
Public Utilities Commission

ACCESS SERVICES

2. General Regulations (Cont'd)

2.4 Payment Arrangements and Credit Allowance (Cont'd)

2.4.3 Credit Allowance for Service Interruptions

(A) General

A service is interrupted when it becomes unusable to the customer because of a failure of facilities used to furnish service under this tariff or in the event that the protective controls applied by the Telephone Company result in the complete loss of service by the customer. An interruption period starts when an inoperative service is reported to the Telephone Company, and ends when the service is operative. An allowance for interruption will apply only when the interruption is not due to the negligence of the customer. The credit allowance for an interruption or for a series of interruptions shall not exceed the monthly rate and minimum monthly usage charge for the service interrupted in any one monthly billing period.

(B) When a Credit Allowance Applies

In case of an interruption to any service, allowance for the period of interruption, if not due to the negligence of the customer, shall be as follows:

RECEIVED

MAY 01 2015

STATE OF ALASKA
REGULATORY COMMISSION OF ALASKA

ACCESS SERVICES

2. General Regulations (Cont'd)

2.4 Payment Arrangements and Credit Allowance (Cont'd)

2.4.3 Credit Allowance for Service Interruption (Cont'd)

B. When A Credit Allowance Applies (Cont'd)

1. For Switched Access Service, no credit shall be allowed for an interruption of less than 24 hours. The customer shall be credited for an interruption of 24 hours or more at the rate of 1/30 of the applicable monthly rates or minimum monthly usage charge for each period of 24 hours or major fraction (12 hours and one minute) thereof that the interruption continues.

2. Except as provided for in Section 6.9.3(c), following, for Ethernet Switched Access Local Transport Real Time Class of Service/Quality of Service, Digital Data Access, D1 through D4 and High Capacity, HC1, Special Access Services, flat rated Switched Access rate elements (i.e., Entrance Facility, Direct Trunked Transport, Multiplexing. and Add/Drop Multiplexing) any period during which the error performance is below that specified for the service will be considered as an interruption. The customer shall be credited for an interruption of 30 minutes or more at the rate of 1/1440 of the monthly charges for the facility or service for each period of 30 minutes or major fraction thereof that the interruption continues. (N) (N)

3. Public Packet Data Network Services

   Credit allowance is computed as described in (2) above for Public Packet Data Network Service rate elements. The monthly charge shall be the total of all monthly rate element charges associated with the service (i.e., End User Port, Access Customer Port, and Permanent Virtual Connections).

4. Except as provided for in Section 6.9.3(C), following, for Ethernet Switched Access Local Transport Real Time Class of Service/Quality of Service, for flat rated Switched Access Service rate elements, the monthly charge shall be the total of all the monthly rate element charges associated with the service (i.e., Entrance Famility, Direct Trunked Transport and Multiplexing). For flat rated Digital Subscriber Line Access Service, the monthly charge shall be the total of the monthly rate element charge for the Digital Subscriber Line Access Service. (N) (N)

RECEIVED
APR 30 1997
ALASKA PUBLIC UTILITIES COMM.

TELEPHONE EXCHANGE CARRIERS OF ALASKA

ACCESS SERVICES

2. General Regulations (Cont'd) (L)

2.4 Payment Arrangements and Credit Allowance (Cont'd)

2.4.3 Credit Allowance for Service Interruption (Cont'd)

(C) When a Credit Allowance Does Not Apply
No credit allowance will be made for:

(1) Interruptions caused by the negligence of the customer.

(2) Interruptions of a service due to the failure of equipment or systems provided by the customer or others.

(3) Interruptions of a service during any period in which the Telephone Company is not afforded access to the premises where the service is terminated.

(4) Interruptions of a service when the customer has released that service to the Telephone Company for maintenance purposes, to make (L)

(L) Text relocated from Original Sheet No. 41.

Tariff Advice No. 34 Effective: June 27, 1997

Issued: _____
Issued By: Alaska Exchange Carriers Association, Inc.
By: _____ Title: President

RECEIVED
DEC 20 1990
State of Alaska
Public Utilities Commission

2. General Regulations (Cont'd)

2.4 Payment Arrangements and Credit Allowance (Cont'd)

2.4.3 Credit Allowance for Service Interruption (Cont'd)

(C) When a Credit Allowance Does Not Apply (Cont'd)

rearrangements, or for the implementation of a change order during the time that was negotiated with the customer prior to the release of the service. Thereafter, a credit allowance as set forth in (B) preceding applies.

(5) Periods when the customer elects not to release the service for testing and/or repair and continues to use it on an impaired basis.

Pursuant to Orders No. 6 & 7 in Docket U-90-26

RECEIVED
NOV 21 1990
State of Alaska
Public Utilities Commission

2. General Regulations (Cont'd)

2.4 Payment Arrangements and Credit Allowance (Cont'd)

2.4.4 Title or Ownership Rights

The payment of rates and charges by customers for the services offered under the provisions of this tariff does not assign, confer or transfer title or ownership rights to proposals or facilities developed or utilized, respectively, by the Telephone Company in the provision of such services.

2.4.5 Re-establishment of Service Following Fire, Flood or Other Occurrence

A. Nonrecurring Charges Do Not Apply

Charges do not apply for the re-establishment of service following a fire, flood or other occurrence attributed to an Act of God provided that:

(1) The service is of the same type as was provided prior to the fire, flood or other occurrence.

(2) The service is for the same customers.

(3) The service is at the same location on the same premises.

(4) The re-establishment of service begins within 60 days after Telephone Company service is available. (The 60 day period may be extended a reasonable period if the renovation of the original location on the premises affected is not practical within the allotted time period.

B. Nonrecurring Charges Apply

Nonrecurring Charges apply for establishing service at a different location on the same premises or at a different premises pending re-establishment of service at the original location.

RECEIVED
December 6, 2024
STATE OF ALASKA
REGULATORY COMMISSION OF ALASKA

2. General Regulations (Cont'd)

2.5 Connections

2.5.1 General

Customer Premise Equipment and Systems may be connected with Switched, Special and Public Packet Data Network Access Service furnished by the Telephone Company where such connection is made in accordance with the provisions specified in Technical Reference Publication AS No. 1 and in 2.1 preceding.

2.6 Definitions

800 Series

Denotes the service access codes of 800, 888, 877, 866, 855, 844, 833 and 822

Access Code

The term "Access Code", with the exception of Feature Group B (FGB) with an Abbreviated Dial Arrangement (ADA), denotes a uniform access code assigned by the Telephone Company to an individual customer in the form 101.XXXX and 950-XXXX. Access codes for FGB with an ADA are explained in Section 5.2.B, following. (N) (N) (N) (N)

Access Order

An order to provide the customer with Switched Access Service or Special Access Service or changes to existing services.

Access Minutes

The unit of usage of exchange facilities in intrastate service for the purpose of calculating chargeable usage. On the originating end of an intrastate call, usage is measured from the time the originating end user's call is delivered by the Telephone Company to, and acknowledged as received by, the customer's facilities connected with the originating exchange. On the terminating end of an intrastate call, usage is measured from the time the call is received by the end user in the terminating exchange. Timing of usage at both originating and terminating ends of an intrastate call shall terminate when the calling or called party disconnects, whichever event is recognized first in the originating and terminating end exchanges, as applicable.

RECEIVED

NOV 03 2011

STATE OF ALASKA
REGULATORY COMMISSION OF ALASKA

2. General Regulations (Cont'd)

2.6 Definitions (Cont'd)

Access Network Change

A. The Telephone Company shall:

1. Serve notice of all proposed changes to the first point of switching (notice) on all access customers that are billed and on the Regulatory Commission of Alaska (Commission). The notice shall be served on up to two individuals of each access customer designated with AECA to receive such notice. The notice will include: (C)

   a. The Telephone Company's name and address;

   b. The name and telephone number of a contact person;

   c. The implementation date of the proposed changes;

   d. The location(s) at which the changes will occur;

   e. A description of the type of changes planned (e.g. reference to technical specifications, protocols, and standards regarding transmission, signaling, routing, and facility assignment, and technical standards);

   f. A description of and supporting documentation for the economic, engineering, customer service, and operational rationale as well as any other public interest considerations which support the proposed changes; and

   g. A description of the reasonably foreseeable impact of the planned proposed changes on access customers.

2. Provide notice at least twelve (12) months before implementation unless the Telephone Company demonstrates extenuating circumstances that would justify less than twelve (12) month's notice.

3. Promptly provide all information and documents requested by the access customer reasonably necessary to evaluate the proposed changes. To the extent necessary, the Telephone Company and AECA shall cooperate to provide information regarding the impact of the proposed change.

RECEIVED
NOV 15 2002
State of Alaska
Regulatory Commission of Alaska

2. General Regulations (Cont'd)

2.6 Definitions (Cont'd)

Access Network Change (Cont'd) (N)

B. The access customer may file an objection to the proposed changes. Any such objection shall be served on the Telephone Company and copied to the Commission no later than thirty (30) days following service of the Telephone Company's network notice. An objection by the access customer to the Telephone Company's proposed change shall include a description and supporting documentation for the economic, engineering, customer service, and operational rationale as well as any other public interest considerations that support its objection to the proposed changes.

C. In the event that an access customer files an objection, the Telephone Company and the access customer will have thirty (30) days from the date of the objection to resolve the issues in the objection (resolution period).

1. During the resolution period, the Telephone Company and the access customer shall negotiate in good faith to resolve the issues raised in the access customer's objection. As part of such good faith negotiations, each party shall have the obligation to promptly furnish all information and supporting documents necessary to evaluate the proposed change, or the objection to the proposed change. To the extent necessary, the Telephone Company and AECA shall cooperate to provide information regarding the impact of the proposed change.

2. During the resolution period, the Telephone Company and the access customer shall notify AECA of any potential resolution to allow AECA the opportunity to review the potential resolution for consistency with this tariff. In the event AECA determines the potential resolution may be inconsistent with this tariff, AECA shall be included in negotiations regarding any such resolution, and AECA shall have the right to object to any resolution that would be inconsistent with the provisions of this tariff.

3. Any resolution reached between the Telephone Company and the access customers must be related to the proposed changes and consistent with this tariff (absent Commission approval for a deviation from the tariff).

D. If the Telephone Company does not receive an objection to the proposed changes, and absent any Commission action to the contrary, the Telephone Company may implement the proposed changes in accordance with the notice. (N)

Pursuant to U-00-24(9)

RECEIVED
NOV 15 2002
State of Alaska
Regulatory Commission of Alaska

2. General Regulations (Cont'd)

2.6 Definitions (Cont'd)

Access Network Change (Cont'd) (N)

E. If an objection is resolved within the resolution period, the Telephone Company and the access customer shall jointly file with the Commission a notification that the objection has been resolved along with a copy of the resolution. In such an event, and absent any Commission action to the contrary, the Telephone Company may implement the proposed changes in accordance with the notice.

F. If an objection is not resolved within the resolution period, then within five (5) days from the end of the resolution period, the Telephone Company may file a Petition with the Commission requesting authorization to implement the proposed changes. The Telephone Company shall include in its Petition the following:

1. A copy of its initial notice and all unresolved objections received;

2. A proposed procedural schedule for the expeditious resolution of the Petition. Whenever possible, the proposed schedule shall be submitted as a stipulated schedule between the Telephone Company and the objecting access customers. Absent extenuating circumstances, the proposed procedural schedule shall provide for the filing of direct testimony by the Telephone Company within thirty (30) days from the date the Commission approves the schedule, answering testimony by the objecting access customer within thirty (30) days from the date of the filing of direct testimony, and reply testimony by the Telephone Company within thirty (30) days from the date of the filing of answering testimony. The procedural schedule shall also request a hearing within thirty (30) days of the filing of the reply testimony and the issuance of a final order within sixty (60) days of the last hearing date. Either party may request a deviation from the procedural schedule set forth above due to circumstances justifying such a deviation;

3. A request for the immediate entry of a standard discovery and confidentiality order. The discovery order shall provide that discovery shall be responded to within ten (10) days from the date discovery is served. (N)

RECEIVED

MAY 1 7 2013

STATE OF ALASKA
REGULATORY COMMISSION OF ALASKA

2. General Regulations (Cont'd)

2.6 Definitions (Cont'd)

Access Tandem

A Telephone Company or centralized equal access provider switching system that provides a concentration and distribution function for originating or terminating traffic between end offices and a customer designated premises, subject to Section 2.6, Access Network Change Noticification.

Add/Drop Multiplexing

The term "Add/Drop Multiplexing" denotes a multiplexing function offered in connection with SONET that allows lower level signals to be added or dropped from a high speed optical carrier channel in a wire center. The connection to the add/drop multiplexer is via a channel to a Central Office Port at a specific digital speed (i.e., DS3, DS1, etc.)

Answer/Disconnect Supervision

The transmission of the switch trunk equipment supervisory signal (off-hook or on-hook) to the customer's point of termination as an indication that the called party has answered or disconnected.

Assumed Minutes of Use

Minutes of use assumed for, or allocated to, unmeasured intrastate interexchange communications services.

Automatic Number Identification (ANI) (N)

The term "Automatic Number Identification" denotes the Multi-Frequency (MF) signaling parameter that identifies the billing number of the calling party. (N)

Balance (100 Type) Test Line

An arrangement in an end office which provides for balance and noise testing.

Bona Fide Request

A good-faith written request by a competing certificated intrastate interexchange carrier to a local exchange carrier for equal access service.

RECEIVED
MAR 09 1992
State of Alaska
Public Utilities Commission

ACCESS SERVICES

2. General Regulations (Cont'd)

2.6 Definitions (Cont'd)

Business Day (L)

The times of day that a company is open for business. Business Day hours for the Telephone Company may be determined by contacting the business office.

Busy Hour Minutes of Capacity (BHMC)

The customer specified maximum amount of Switched Access Service access minutes the customer expects to be handled in an end office switch during any hour in an 8:00 a.m. to 11:00 p.m. period for the Switched Access Service ordered. (L) (L1) This customer furnished BHMC quantity is the input data the Telephone Company uses to determine the number of transmission paths for the Switched Access Service ordered. (L1) (D)

(L) Text relocated from First Revision Sheet No. 45
(L1) Text relocated from First Revision Sheet No. 46

RECEIVED

MAY 1 7 2013

STATE OF ALASKA
REGULATORY COMMISSION OF ALASKA

ACCESS SERVICES

2. General Regulations (Cont'd)

2.6 Definitions (Cont'd)

Call

A customer attempt for which the complete address code (e.g., 0-, 911, or 10 digits) is provided to the serving dial tone office.

Calling Party Number (CPN) (N)

The term "Calling Party Number" denotes the SS7 signaling parameter that identifies the subcriber line number or directory number of the calling party. (N)

Carrier or Common Carrier

See Interexchange Carrier.

CCS

A standard unit of traffic load that is equal to 100 seconds of usage or capacity of a group of servers (e.g., trunks). Also known as "100 call seconds".

Central Office

A local Telephone Company switching system where Telephone Exchange Service customer station loops are terminated for purposes of interconnection to each other and to trunks.

Centrex CO Service

A service that (1) uses a portion of a Telephone Company switch located at the Telephone Company central office to meet the customer's internal needs and serves as the customer's interface with the local and interexchange

RECEIVED

MAY 1 7 2013

STATE OF ALASKA
REGULATORY COMMISSION OF ALASKA

ACCESS SERVICES

2. General Regulations (Cont'd)

2.6 Definitions (Cont'd)

networks and (2) links the customer's main stations to the Telephone Company switch with subscriber loops.

Channel

A communications path between two or more points of termination.

Charge Number (CN) (N)

The term "Charge Number" denotes the SS7 signaling parameter that identifies the billing telephone number of the calling party. (N)

Coin Stations

A location where Telephone Company equipment is provided in a public or semi-public place where Telephone Company customers can originate telephonic communications and pay the applicable charges by inserting coins into the equipment.

Committed Information Rate

The term "Committed Information Rate" denotes the transmission speed specified by the customer at which the Frame Relay Access Service network commits to transfer data between two ports.

Common Line

A line, trunk, pay telephone line or other facility provided under the general and/or local exchange service tariffs of the Telephone Company, terminated on a central office switch. A common line-residence is a line or trunk provided under the residence regulations of the local exchange service tariffs. A common line-business is a line provided under the business regulations of the general and/or local exchange service tariffs.

Communications System

Channels and other facilities which are capable of communications between terminal equipment provided by other than the Telephone Company.

Concurring Carrier

A "concurring" carrier is any uncertificated Alaska local exchange carrier participating in the tariff.

RECEIVED

MAY 1 7 2013

STATE OF ALASKA
REGULATORY COMMISSION OF ALASKA

ACCESS SERVICES

2. General Regulations (Cont'd)

2.6 Definitions (Cont'd)

Customer Message

A completed intrastate call originated by a customer's end user. A customer message begins when answer supervision from the premise of the ordering customer is received by Telephone Company recording equipment indicating that the called party has answered. A message ends when disconnect supervision is received by Telephone Company recording equipment from either the premises of the ordering customer or the customer's end user premises from which the call originated.

Customer Designated Premises

The premises specified by the customer for the provision of Access Service.

Customer(s)

Any individual, partnership, association, joint-stock company trust, corporation, or governmental entity or other entity which orders the services offered under this tariff, including, but not limited to Local Exchange Carrier(s), Interexchange Carriers(s) (IC's), End User(s), and other telecommunications carriers or providers originating or terminating Toll VoIP-PSTN Traffic. (C) | (C)

Data Transmission (107 Type) Test Line

An arrangement which provides for a connection to a signal source which provides test signals for one-way testing of data and voice transmission parameters.

RECEIVED
APR 03 1992
State of Alaska
Public Utilities Commission

ACCESS SERVICES

2. General Regulations (Cont'd)

2.6 Definitions (Cont'd)

Dedicated Wholesale Service (N)

Wholesale intrastate interexchange service that is not switched by the wholesale provider's equipment. (N)

Detail Billing (L)

The listing of each message and/or rate element for which charges to a customer are due on a bill prepared by the Telephone Company. (L)

(L) Text relocated from First Revised Sheet No. 48.

Pursuant to Docket U-91-82, Order No. 1.

RECEIVED

MAY 1 7 2013

STATE OF ALASKA
REGULATORY COMMISSION OF ALASKA

2. General Regulations (Cont'd)

2.6 Definitions (Cont'd)

Effective 2-Wire

A condition which permits the simultaneous transmission in both directions over a channel, which does not insure independent information transmission in both directions. Effective 2-wire channels may be terminated with 2-wire or 4-wire interfaces.

Effective 4-Wire

A condition which permits the simultaneous independent transmission of information in both directions over a channel. The method of implementing effective 4-wire transmission is at the discretion of the Telephone Company (physical, time domain, frequency-domain separation or echo cancellation techniques).

End Office Switch

A local Telephone Company switching system where Telephone Exchange Service customer common lines are terminated for purposes of interconnection to trunks. Included are Remote Switching Modules and Remote Switching Systems served by a host office in a different wire center.

End User

Any customer of an intrastate telecommunications service that is not a carrier, except that a carrier shall be deemed to be an "end user" to the extent that such carrier uses a telecommunications service for administrative purposes, without making such service available to others, directly or indirectly.

Entrance Facility (N)

The term Entrance Facility denotes a Switched Access Service dedicated Local Transport facility between the customer's serving wire center and the designated premises.

RECEIVED

JUN 1 1 2009

STATE OF ALASKA
REGULATORY COMMISSION OF ALASKA

ACCESS SERVICES

2. General Regulations (Cont'd)

2.6 Definitions (Cont'd)

Entry Switch

See First Point of Switching

Equal Access

A method of interconnection between a local exchange Telephone Company and all long distance carriers serving the exchange that allows an end user's interexchange calls to be automatically directed to the end user's chosen primary interexchange carrier when the end user dials 1-plus or any other abbreviated dialing arrangement authorized by the Commission. Equal Access requires local exchange carrier access service to be made available in equal kind, quality, and price to all interexchange carriers, and is commonly provided using Feature Group D signaling and interconnection arrangements.

Ethernet (N)

The term "Ethernet" denotes a high speed networking technology utilizing a packet-based Ethernet protocol. Ethernet enables broadband multimedia traffic (i.e., voice, data and video) to be carried over the same network. (N)

Exchange

A unit established by the Telephone Company for the administration of communications service in a specified area which usually embraces a city, town or village and its environs. It consists of one or more central offices together with the associated facilities used in furnishing communications service within that area.

Extended PVC

The term "Extended PVC" denotes the interconnection of a port on a frame relay switch with a port on another frame relay switch. The EPVC establishes a communications path between the end user port on a frame relay switch and an access customer port on another interconnected frame relay switch within the same local service calling area.

Feature Group A

A line-side connection for interexchange service that is accessed by the end user via a 7-digit telephone number that may vary with each exchange.

Feature Group B

A trunk-side connection for interexchange service that is accessed by the end user by dialing "950-1XXX," with the "XXX" identifying the desired interexchange carrier.

RECEIVED

NOV 15 2002

State of Alaska
Regulatory Commission of Alaska

ACCESS SERVICES

2. General Regulations (Cont'd)

2.6 Definitions (Cont'd)

Feature Group C (FGC)

A trunk-side connection for interexchange service that is accessed by no-plus dialing or 0 or 1-plus dialing providing end user access to the incumbent carrier.

Feature Group D (FGD)

A trunk side switching connection designed for equal access provided through the use of end office or Commission approved access tandem switch trunk equipment. The access code for FGD switching is a uniform access code of the form "10XXX". When an end user has presubscribed, pursuant to Section 9.3.4, the form of the numbers dialed by the end user is NXX-XXXX,0 or 1+NXX-XXXX, to use their chosen primary interexchange carrier.

First Point of Switching (FPOS)

The first Telephone Company or centralized equal access provider location at which switching occurs on the terminating path of a call proceeding from the IC point of termination to the terminating end office and, at the same time, the last Telephone Company or centralized equal access provider location at which switching occurs on the originating path of a call proceeding from the originating end office to the IC point of termination, subject to Section 2.6., Access Network Change Notification. (N)

Frame

The term "Frame" denotes a group of data bits in a specific format, which enables network equipment to recognize the meaning and purpose of the specific bits.

RECEIVED
JUN 24 1997
ALASKA PUBLIC UTILITIES COMM

ACCESS SERVICES

2. General Regulations (Cont'd) (N)

2.6 Definitions (Cont'd)

Frame Relay Access Customer Port

The term "Frame Relay Access Customer Port" denotes the physical location in the telephone company switching offices where the access customer's special access facility connects to the telephone company's Frame Relay Access Service network. It specifies how a frame relay switch sends and receives data from a frame relay access customer's network.

Frame Relay Access Service

The term "Frame Relay Access Service" denotes a medium-speed, connection-oriented packet-switched data service that allows for the interconnection of Local Area Networks or other compatible end user customer premises equipment for the purpose of connecting to an access customer's intrastate network.

Frame Relay End User Port

The term "Frame Relay End User Port" denotes the physical location in the telephone company switching office where the special access facility from the end user connects to the Frame Relay Access Service Network. It receives the data frame from the end user's Local Area Network or other compatible CPE devices and verifies that the end user connection and the corresponding access customer connection are valid before relaying the frame to the destination end point. (N)

RECEIVED

DEC 21 1998

State of Alaska
Public Utilities Commission

ACCESS SERVICES

2. General Regulations

(D)

RESERVED FOR FUTURE USE

(D)

RECEIVED
MAR 09 1992
State of Alaska
Public Utilities Commission

ACCESS SERVICES

2. General Regulations (Cont'd)

2.6 Definitions (Cont'd)

Host Office

An electronic switching system which provides call processing capabilities for one or more Remote Switching Modules or Remote Switching Systems.

Hub

A Telephone Company designated serving wire center at which bridging or multiplexing functions are performed. The bridging functions performed are to connect three or more customer designated premises in a multipoint arrangement. The multiplexing functions are to channelize analog or digital facilities to individual services requiring a lower capacity or bandwidth. NATIONAL EXCHANGE CARRIER ASSOCIATIONS, INC. TARIFF FCC NO. 4 identifies serving wire centers, hub locations and the type of bridging or multiplexing functions available.

Immediately Available Funds

A corporate or personal check drawn on a bank account for which funds are available for use by the receiving party on the same day on which they are received and include U.S. Federal Reserve bank wire transfers, U.S. Federal Reserve notes (paper cash), U.S. coins and U.S. Postal Money Orders.

Incumbent Carrier (N)

The Carrier, or its successor, certificated in commission Docket U-69-24 to provide intrastate interexchange telephone service. (N)

Individual Case Basis

A condition in which the rates and charges for an offering under the provisions of this tariff are developed based on the circumstances in each case.

Issued: _____
Issued By: Alaska Exchange Carriers Association, Inc.
By: _____ Title: President

RECEIVED
JUN 21 2021
STATE OF ALASKA
REGULATORY COMMISSION OF ALASKA

ACCESS SERVICES

2. General Regulations (Cont'd)

2.6 Definitions (Cont'd)

Interconnection Point

The point where facilities of the Telephone Company meet facilities of a connecting Exchange Telephone Company or Interexchange Carrier.

Interexchange Carrier (IC) or Interexchange Common Carrier

Any individual, partnership, association, joint-stock company, trust, governmental entity, or corporation engaged for hire in intrastate communication by wire, fiber, or radio between two or more exchanges.

Interexchange Carrier Customer (ICC)

A certificated interexchange carrier and/or any other entity specified by the Commission providing intrastate interexchange telephone service.

Internet Protocol (IP) Signaling

The term "Internet Protocol (IP) Signaling" denotes a packet data-oriented protocol used for communicating call signaling information.

Interstate Call

Any toll communications between two states subject to oversight by the Federal Communications Commission (FCC). The term denotes both interstate and foreign communications.

Intrastate Call

Any toll communications within a state subject to oversight by the state regulatory commission.

Issuing Carrier

An "issuing" carrier is any certificated Alaska local exchange carrier participating in the tariff.

Joint Tandem Switched Transport (N)

The rate element assessable for the transmission of originating toll free minutes. The rate element includes both the transport between the end office and the tandem switch and the tandem switching. It does not include transport of traffic over dedicated transport facilities between the serving wire center and the tandem switching office.

RECEIVED

DEC 21 1998

State of Alaska
Public Utilities Commission

ACCESS SERVICES

2. General Regulations (Cont'd)

2.6 Definitions (Cont'd)

Line Side Connection

A connection of a transmission path to the line side of a local exchange switching system. This type of connection is used when providing FGA Switched Access Service.

Local Access and Transport Area

A geographic area established for the provision and administration of communications service. It encompasses one or more designated exchanges, which are grouped to serve common social, economic and other purposes.

Local Area Network

The term "Local Area Network" denotes a network permitting the interconnection and intercommunication of a group of

computers.

Local Exchange Carrier (LEC)

Any individual, partnership, association, cooperative, joint stock company, trust, or corporation engaged in Intrastate communication for hire by wire, radio, or other means within one or more exchanges.

Loop Around Test Line

An arrangement utilizing a Telephone Company central office to provide a means to make certain two-way transmission tests on a manual basis. This arrangement has two central office terminations, each reached by means of separate telephone numbers and does not require any specific customer premises equipment. Equipment subject to this test arrangement is at the discretion of the customer.

(D)

RECEIVED

MAY 1 7 2013

STATE OF ALASKA
REGULATORY COMMISSION OF ALASKA

ACCESS SERVICES

2. General Regulations (Cont'd)

2.6 Definitions (Cont'd)

Measured Intrastate Interexchange Communications Service

Any intrastate interexchange communications service provided by an ICC in which the ICC's usage of the service is measured by or on behalf of the ICC or the Telephone Company.

Message

See "Customer Message".

Milliwatt (102 Type) Test Line

An arrangement in an end office which provides a 1004 Hz tone at 0 dBm0 for one-way transmission measurements towards the customer's premises from the Telephone Company end office.

Multi-Frequency (MF) Signaling (N)

The term "Multi-Frequencing (MF) Signaling" denotes an in-band signaling method in which call signaling information is transmitted between network switches using the same voiceband channel used for voice. (N)

Net Salvage

The estimated scrap, sale, or trade-in value, less the estimated cost of removal. Cost of removal includes the costs of demolishing, or otherwise disposing of the

RECEIVED

MAR 11 2005

State of Alaska
Regulatory Commission of Alaska

ACCESS SERVICES

2. General Regulations (Cont'd)

2.6 Definitions (Cont'd)

material and any other applicable costs. Since the cost of removal may exceed salvage value, net salvage value may be negative.

Network Access Fee (NAF) (N)

See Section 4

Network Control Signaling

The transmission of signals used in the telecommunications system which perform functions such as supervision (control, status, and charge signals), address signaling (e.g., dialing), calling and called number identifications, rate of flow, service selection error control and audible tone signals (call progress signals indicating re-order or busy conditions, alerting, coin denomination, coin collect and coin return tones) to control the operation of the telecommunications system.

Nonsynchronous Test Line

An arrangement in step-by-step end offices which provides operational tests which are not as complete as those provided by the synchronous test lines, but can be made more rapidly.

No-plus Dialing

A system of dialing where the calling party dials an interexchange call without dialing any prefix.

North American Numbering Plan

A three-digit area (NPA) code and a seven-digit telephone number made up of a three-digit Central Office code plus a four-digit station number.

Off-Hook

The active condition of Switched Access or a Telephone Exchange Service Line.

RECEIVED

JUN 11 2009

STATE OF ALASKA
REGULATORY COMMISSION OF ALASKA

ACCESS SERVICES

2. General Regulations (Cont'd)

2.6 Definitions (Cont'd)

On-Hook

The idle condition of Switched Access or a Telephone Exchange Service line.

Open Circuit Test Line

An arrangement in an end office which provides an ac open circuit termination of a trunk or line by means of an inductor of several Henries.

Optical Carrier Channel (N)

The term "Optical Carrier Channel" denotes the high speed optical communications path for transporting information utilizing a Synchronous Optical Channel platform. The channel is provided at transmissino rates of 155.52 Mbps (OC3) and 622.08 Mbps (OC12).

Optical Carrier Rate (OC-N)

The term "Optical Carrier Rate" denotes the line rate being transmitted on an optical carrier channel. A SONET transmission rate is equivalent to "N" times the OC1 line rate of 51.84 Mbps.

Optical Carrier Rate Concatenated

The term "Optical Carrier Rate Concatenated" denotes the transmission of a combined signal formed by linking together mulitple individual signals.

Optical Line Termination

The term "Optical Line Termination" denotes the network interface on the customer designated premises equipment that provides for an optical handoff. (N)

Originating Direction

The use of access service for the origination of calls from an End User Premises to an IC Premises.

(L)

(L)

(L) Text relocated to Second Revised Sheet No. 55.1.

RECEIVED

JUN 1 1 2009

STATE OF ALASKA
REGULATORY COMMISSION OF ALASKA

ACCESS SERVICES

2. General Regulations (Cont'd)

2.6 Definitions (Cont'd)

(L)

Pay Telephone

Telephone Company instruments and related facilities that are available to the general public for public convenience and necessity, including public and semi-public telephones, and coinless telephones.

Permanent Virtual Connection (PVC)

The term "PVC" denotes a software defined communications path between two port connections within the Frame Relay Access Service network.

Point of Termination

The point of demarcation within a customer-designated premises at which the Telephone Company's responsibility for the provision of Access Service ends, subject to Section 2.6, Access Network Change NotificationPremises (L)

Premises

A building or buildings on continuous property (except Railroad Right-of-Way, etc.) not separated by a public highway.

Presubscribed Carrier

The interexchange carrier selected by or assigned to an end user's access line through the presubscription process.

Presubscription

The process by which end users may select a primary interexchange carrier to handle toll calls for a particular access line on a no-plus, 0-plus, or 1-plus dialing basis. Depending upon availability, the end user may presubscribe to different ICs for interstate and intrastate calls.

(L) Text relocated from Fourth Revised Sheet No. 55

RECEIVED

MAY 1 7 2013

STATE OF ALASKA
REGULATORY COMMISSION OF ALASKA

2. General Regulations (Cont'd)

2.6 Definitions (Cont'd)

Rate Band

Refer to the Local Transport/Special Access Rate Band Table in National Exchange Carrier Association Tariff F.C.C. No. 5, Section 17.5.1

Remote Switching Modules and/or Remote Switching Systems

Small, remotely controlled electronic end office switches which obtain all or part of their call processing capability from a Host Office. The Remote Switching Modules and/or Remote Switching Systems cannot accommodate direct trunks. (C)

Registered Equipment

The customer's premises equipment which complies with and has been approved within the Registration Provisions of Part 68 of the FCC's Rules and Regulations.

RECEIVED
APR 21 1993
State of Alaska
Public Utilities Commission

ACCESS SERVICES

2. General Regulations (Cont'd)

2.6 Definitions (Cont'd)

Shortage of Facilities or Equipment

A condition which occurs when the Telephone Company does not have appropriate cable, switching capacity, bridging or multiplexing equipment, etc., necessary to provide the Access Service requested by the customer.

Short Circuit Test Line

An arrangement in an end office which provides for an ac short circuit termination of a trunk or line by means of a capacitor of at least four microfarads.

Signaling Point (SP) (N)

The term "Signaling Point (SP)" denotes an SS7 network interface element capable of Originating and terminating SS7 trunk signaling messages.

Service Switching Point (SSP)

A Service Switching Point denotes an end office or tandem which, in addition to having SS7 and SP capabilities, is also equipped to query centralized data bases.

Signaling System 7 (SS7)

The term "Signaling System 7 (SS7)" denotes the layered protocol used for standardized common channel signaling in the United States and Puerto Rico. (N)

(L)

(L)

(L) Text relocated to First Revised Sheet No. 57.1.

RECEIVED

JUN 1 1 2009

STATE OF ALASKA
REGULATORY COMMISSION OF ALASKA

ACCESS SERVICES

2. General Regulations (Cont'd)

2.6 Definitions (Cont'd)

Signal Transfer Point (STP)

The term "Signal transfer Point (STP)" denotes a packet switch which provides access to the Telephone Company's SS7 network and performs SS7 message signal routing and screening.

Signal Transfer Point (STP) Port

The term "Signal Transfer Point (STP Port" denotes the point of termination and interconnection to the STP.

Special Access - See Section 7

Standard PVC

The term "Standard PVC" denotes the interconnection of ports on the same frame relay switch.

Switched Access - See Section 6

Synchronous Optical Network (SONET) (N)

The term "SONET" denotes a North American Standard for high speed synchronous optical channels having minimum transmission rates of 51.84 Mbps. The standard SONET optical carrier rate of 51.84 Mbps is called OC1; the equivalent electrical signal rate is called STS-1. SONET standardizes higher transmission bit rates, "OCN", as exact multiples of OC1 (N x 51.84 Mbps). For example, OC3 equals 3 x 51.84 Mbps. (N)

Synchronous Test Line

An arrangement in an end office which performs marginal operational tests of supervisory and ring-tripping functions.

Synchronous Transport Signal (STS) (N)

The term "Synchronous Transport Signal" denotes a 51.84 Mbps electrical signal used with the SONET optical carrier network. The signal consists of the information content and the overhead used by SONET. The overhead is used for controlling, framing, and maintaining the STS signal so it can be directly connected to other SONET carrier channels. STS signals are in exact multiples of 51.84 Mbps. (STS-1 is 51.84 Mbps., STS-3 is 155.52 Mbps., etc.) (N)

(L) Text relocated to First Revised Sheet No. 57.2 (L)

RECEIVED

JUN 1 1 2009

STATE OF ALASKA
REGULATORY COMMISSION OF ALASKA

ACCESS SERVICES

2. General Regulations (Cont'd)

2.6 Definitions (Cont'd)

Telecommunications Service Priority (TSP) (L)

The Telecommunications Service Priority System replaces the previous Restoration Priority (RP) System and provides priority treatment for National Security Emergency Preparedness Services critical for maintaining a state of readiness or responding to and managing any event or crisis which causes or could cause harm to the population, damage to property or a threat to the security of the United States. (L)

Telephone Company

Telephone Company is a Local Exchange Carrier (See Local Exchange Carrier).

Terminating Direction

The use of Access Service for the completion of calls from an IC premises to an End User Premises.

(L) Text relocated from Second Revised Sheet No. 57.1

RECEIVED
JUN 21 2021
STATE OF ALASKA
REGULATORY COMMISSION OF ALASKA

ACCESS SERVICES

2. General Regulations (Cont'd)

2.6 Definitions (Cont'd)

Termination Liability

The amount which will be billed if services using specially constructed facilities are terminated prior to the expiration of the Termination Liability Period.

Throughput

The term "Throughput" denotes the number of data bits successfully transferred in one direction per unit of time.

Toll Free Call (N)

A call to a Toll Free number, for which the toll charges for completed calls are paid by the entity that has been assigned the toll free number. (N)

Toll Free Data Base Access Service (N)

A service which uses a database system to identify toll free access customers on a 10-digit basis. Toll Free Database Access Service shall include the following service access Codes 800, 888, 877, 866, 855, 844, 833 and 822. (N)

Toll VoIP-PSTN Traffic

An IC's interexchange voice traffic exchanged with the Telephone Company in Time Division Mulitplexing format over PSTN facilities, which originates and/or terminates in Internet Protocol (IP) format. Toll VoIP-PSTN Traffic originates and/or terminates in IP format when it originates from and/or terminates to an end user customer of a service that requires IP-compatible customer premises equipment.

Transmission Measuring (105 Type) Test Line

An arrangement in an end office which provides far-end access to a recorder and permits two-way loss and noise measurements to be made on trunks from a near end office.

Transmission Path

An electrical path capable of transmitting signals within the range of the service offering, e.g., a voice grade transmission path is capable of transmitting voice frequencies within the approximate range of 300 to 3000 Hz. A transmission path is comprised of physical or derived facilities consisting of any form or configuration of plant typically used in the telecommunications industry.

Trunk

A communications path connecting two switching systems in a network, used in the establishment of an end-to-end connection.

Trunk Group

A set of trunks which are traffic engineered as a unit for the establishment of connections between switching systems in which all of the communications paths are interchangeable.

RECEIVED

DEC 21 1998

State of Alaska
Public Utilities Commission

ACCESS SERVICES

2. General Regulations (Cont'd)

2.6 Definitions (Cont'd)

Trunk Side Connection

The connection of a transmission path to the trunk side of a local exchange switching system. This type of connection is used when providing FGB, FGC, or FGD Switched Access Service.

Two-Wire to Four-Wire Conversion

An arrangement which converts a four-wire transmission path to a two-wire transmission path to allow a four-wire facility to terminate in a two-wire entity (e.g., a central office switch).

Uniform Service Order Code (USOC)

A three or five character alphabetic, numeric, or an alphanumeric code that identifies a specific item of service or equipment. Uniform Service Order Codes are used in the Telephone Company billing system to generate recurring rates and nonrecurring charges.

Unmeasured Intrastate Interexchange Communications Service (L)

Any intrastate interexchange communications service provided by an ICC in which the ICC's usage of the service is not measured.

V and H Coordinates Method

A method of computing airline miles between two points by utilizing an established formula which is based on the vertical and horizontal coordinates of the two points. (L)

Voice Equivalent Band

One voice band or the equivalent amount of information. The voice information may be encoded for transport using either analog or digital techniques.

(D)

(D)

(L) Text relocated from Original Sheet 67.3

Pursuant to Order No. 7 in Docket R-97-5 and R-97-6

RECEIVED
JUN 21 2021
STATE OF ALASKA
REGULATORY COMMISSION OF ALASKA

ACCESS SERVICES

2. General Regulations (Cont'd)

2.6 Definitions (Cont'd)

WATS Serving Office

The term WATS Serving Office (WSO) denotes a Telephone Company-designated serving wire center where switching and/or screening and/or recording functions are performed for WATS/ Toll Free or WATS-type services. (T)

Wire Center

A building in which one or more central offices, used for the provision of Telephone Exchange Services, are located.

Wholesale Intrastate Interexchange Communications Service

Any intrastate interexchange communications service that is offered by an ICC, under tariff or contract, exclusively to other ICCs.

Wholesale Minutes of Use

The minutes of use associated with Wholesale Intrastate Interexchange Communications Services. Wholesale minutes of use encompasses both minutes purchased by an ICC from another ICC and minutes sold by an ICC to another ICC.

Wholesale Provider

A certificated intrastate interexchange carrier that has an approved and published tariff for providing wholesale service to other intrastate carriers.

Wholesale User

A certificated intrastate interexchange carrier that uses the transport facilities of another intrastate carrier to access the Telephone Company's facilities.

RECEIVED
APR 03 1992
State of Alaska
Public Utilities Commission

ACCESS SERVICES

2. General Regulations (Cont'd)

2.6 Definitions (Cont'd)

0-Plus Dialing (L)

A method of dialing for an operator-assisted call where the calling party dials "0" plus the phone number, an operator comes on the line, and the caller states the type of call being attempted. This dialing pattern is used for collect, credit-card, person-to-person, and third-party billed calls.

1-PIC Dialing

End user access to the same presubscribed carrier for both interstate and intrastate calling.

1-Plus Dialing

A system of dialing where the calling party dials the prefix "1" prior to the telephone number for an interexchange call. (L)

2-PIC Dialing

A system of dialing where the end user may select, for each access line, an intrastate interexchange carrier that is different from the end user's presubscribed interstate interexchange carrier.

(L) Text relocated from First Revised Sheet No. 59.1
Pursuant to Docket U-91-82, Order No. 1

RECEIVED
DEC 20 1990
State of Alaska
Public Utilities Commission

ACCESS SERVICES

2. General Regulations (Cont'd)

2.7 Audit Provisions

Upon 30 days written notice (or such shorter period as the parties may mutually agree upon), the AECA,the Telephone Company or the customer, or their authorized representatives, shall have the right to examine and audit each other, during normal business hours and at reasonable intervals, as determined by the party undergoing the audit, all such records and accounts in possession of the other, which contain information bearing upon the determination of the amounts payable to either the AECA or the Telephone Company by the customer or amounts payable to the customer by the AECA or the Telephone Company. The maximum period any such audit shall encompass is 24 months, or the period from the most recent audit, whichever is less.

No claim or demand with respect to any audit may be made by the AECA, the Telephone Company or the customer more than two years after the date of the event which gave rise to the claim or demand, except as provided for in 2.4.1(B)(2)(d) or (e) preceding.

The AECA, the Telephone Company, and each Customer which receives funds from or makes payment to the AECA or the Telephone Company shall keep and maintain detailed records of all payments to and receipts from the AECA so as to permit an accounting by any affected party or by the APUC.

Record retention for all matters applicable to the audits and reviews will be as required by law, and/or regulatory requirements; the retention will be in conformance with the practices established by the AECA, subject to the direction of the APUC.

2.8 Dispute Resolution

(A) Who May Initiate a Dispute

The AECA, the Telephone Company, and any customer which participates in a service provided under a tariff administered by the AECA, may initiate a dispute under the following dispute resolution procedure.

Pursuant to Orders No. 6 & 7 in Docket U-90-26

RECEIVED
DEC 20 1990
State of Alaska
Public Utilities Commission

ACCESS SERVICES

2. General Regulations (Cont'd)

2.8 Dispute Resolution (Cont'd)

(B) Jurisdictional Limitation

(1) Disputes Beyond Scope of This Procedures

The following issues are beyond the scope of this procedure and may not be presented to the AECA for resolution:

(a) The rates for services set forth in the AECA tariff;

(b) The ratios and factors as determined or developed by the APUC (including rate of return factors) whereby revenues are distributed among AECA member companies, provided that any recipient of revenues distributed by the AECA may raise as a dispute the computation of the amounts distributed to it;

(c) Any matter that involves resolving the accuracy of data provided by the IC relating to the determination of an IC's market share except that AECA will, if asked, call an IC or an LEC to make an initial inquiry about the accuracy of the data submitted.

(d) Any matter exclusively reserved to the Alaska Public Utilities Commission by statute, administrative regulation or tariff provisions.

(2) Disputes Within Scope Of This Procedure

Any matter not beyond the scope of this procedure may be submitted to the AECA under this procedure.

Pursuant to Orders No. 6 & 7 in Docket U-90-26

RECEIVED
NOV 21 1990
State of Alaska
Public Utilities Commission

TELEPHONE EXCHANGE CARRIERS OF ALASKA

ACCESS SERVICES

2. General Regulations (Cont'd)

2.8 Dispute Resolution (Cont'd)

(C) Initiation Of Disputes

Any aggrieved entity (hereafter "Disputant") may initiate a dispute by serving on the Executive Director a written statement setting forth the nature of the dispute and the specific relief requested. In the event the dispute involves an entity other than or in addition to the AECA itself, the Disputant shall simultaneously serve a copy of the written statement on all other affected entities. The Executive Director shall distribute appropriate copies of the dispute statement to the AECA Board of Directors or committee established by the Board.

Pursuant to Orders No. 6 & 7 in Docket U-90-26

RECEIVED
NOV 21 1990
State of Alaska
Public Utilities Commission

TELEPHONE EXCHANGE CARRIERS OF ALASKA

ACCESS SERVICES

2. General Regulations (Cont'd)

2.8 Dispute Resolution (Cont'd)

(D) Investigation Of Dispute

The Executive Director shall conduct such investigation into the dispute as he deems reasonable and appropriate. The investigation may be conducted informally, and shall be directed to a fair and expeditious resolution of any legitimate dispute.

(E) Resolution of Dispute By Executive Director

(1) Any dispute not requiring a formal decision or concurrence of the AECA Board of Directors shall be resolved by the Executive Director. The Executive Director shall render a written determination within 30 days of the submission date of the dispute. In the event the Executive Director fails to render a written decision within this 30 day period, the dispute shall be deemed to have been denied.

(2) If the dispute requires the formal decision or concurrence of the AECA Board of Directors, the Executive Director shall place the matter on the agenda of the next regular or special meeting of the AECA Board which occurs not less than 30 days after the dispute. The Disputant may, and the Executive Director shall appear at that Board meeting. Subject to such reasonable limitations as the Board may prescribe, the Disputant may make a presentation to the Board. The Executive Director shall report to the Board the findings of his investigation and may advance a recommended decision. If within 30 days thereafter the Board fails to take affirmative action on the dispute, the dispute shall be deemed to have been denied. No Board member who has a direct interest in the subject of the dispute or who is an officer, employee or agent of the Disputant may participate in the Board's determination.

Pursuant to Orders No. 6 & 7 in Docket U-90-26

RECEIVED
December 6, 2024
STATE OF ALASKA
REGULATORY COMMISSION OF ALASKA

ACCESS SERVICES

2. General Regulations (Cont'd)

2.8 Dispute Resolution (Cont'd) **(T)**

(F) Right to File Complaint With The Commission

Nothing in this dispute resolution procedure shall deprive the Disputant of its right to file a complaint with the Regulatory Commission of Alaska, either in the first instance, or as an appeal from a resolution entered as a result of the procedures set forth in the AECA tariff.

(D)

(D)

RECEIVED
NOV 21 1990
State of Alaska
Public Utilities Commission

TELEPHONE EXCHANGE CARRIERS OF ALASKA

ACCESS SERVICES

2. General Regulations

RESERVED FOR FUTURE USE

Pursuant to Orders No. 6 & 7 in Docket U-90-26

RECEIVED
NOV 21 1990
State of Alaska
Public Utilities Commission

TELEPHONE EXCHANGE CARRIERS OF ALASKA

ACCESS SERVICES

2. General Regulations

RESERVED FOR FUTURE USE

Pursuant to Orders No. 6 & 7 in Docket U-90-26

RECEIVED

DEC 14 2018

STATE OF ALASKA
REGULATORY COMMISSION OF ALASKA

ACCESS SERVICES

3. Carrier Common Line Access Service

The Telephone Company will provide Carrier Common Line Access Service (CCL) to customers.

3.1 General Description

Carrier Common Line Access provides for the use of Telephone Company common lines by customers for access to end users to furnish intrastate service.

Carrier Common Line Access is provided where the customer obtains Telephone Company Switched Access Service under this tariff.

Effective January 1, 2019, the Carrier Common Line rate element has been eliminated, and is designated as Essential Network Support (ENS) as described in Section 3.6.B. (N) **(N)**

The Essential Network Support rate element is associated with Switched Access feature groups addressed in Section 6. (D) (N)

RECEIVED

JUL 1 4 2011

STATE OF ALASKA
REGULATORY COMMISSION OF ALASKA

ACCESS SERVICES

3. Carrier Common Line Access Service (Cont'd)

3.2 Limitations

A. A telephone number is not provided with Carrier Common Line Access.

B. Detail billing is not provided for Carrier Common Line Access.

C. Directory listings are not included in the rates and charges for Carrier Common Line Access.

D. Intercept arrangements are not included in the rates and charges for Carrier Common Line Access.

E. All line side connections provided in the same combined access group will be limited to the same features and operating characteristics.

F. All trunk side connections provided in the same combined access group will be limited to the same features and operating characteristics.

3.3 Undertaking of the Telephone Company

Where the ICC is provided with Switched Access Service under other sections of this tariff, the Telephone Company will provide the use of Telephone Company common lines by an ICC for access to end users. Carrier Common Line Access rates and charges are set forth 13.1, following, in accordance with the regulations as set forth in 3.6 following. (T)

3.4 Obligations of the Customer

A. Any Switched Access Service associated with Carrier Common Line Access shall be ordered under other sections of this tariff.

RECEIVED

JUN 16 2011

STATE OF ALASKA
REGULATORY COMMISSION OF ALASKA

ACCESS SERVICES

3. Carrier Common Line Access Service (Cont'd)

3.4 Obligations of the Customer (Cont'd)

B. The ICC facilities at the premises of the ordering ICC shall provide the necessary on-hook and off-hook supervision.

C. Reserved for Future Use.

D. The charges for Carrier Common Line Access Charges service shall be determined as set forth in 3.6 following. (C) (D)

E. The reports required under Section 3.5 must be submitted by the ICC to the Telephone Company no more than 5 working days following the last day of each month. The reporting period for the switched access minutes will be from the 20th to the 19th of the next month. (C)

RECEIVED

JUL 1 4 2011

STATE OF ALASKA
REGULATORY COMMISSION OF ALASKA

ACCESS SERVICES

3. Carrier Common Line Access Service (Cont'd)

3.4 Obligations of the Customer (Cont'd)

If the ICC does not furnish the reports to the Telephone Company, the Telephone Company shall estimate the ICC's access minutes in accordance with Section 3.5.1. (T)

F. The information provided in the reports required in Section 3.6 shall reflect the best data available as of the time each monthly report is prepared. If actual data is unavailable for certain categories (except where other provisions of this tariff require specific assumptions to be applied), an estimate will be provided in accordance with Section 3.6. Revised information will be filed when it becomes available. Any corrections or other revisions to actual data reported to the Telephone Company should be reported as soon as possible. (T)

a. A brief narrative explanation of the adjustment and its causes.

G. Each of the reports required in Section 3.6 will be signed by an authorized representative of the ICC verifying that he/she is familiar with the contents thereof, and that such information is true and correct to the best of his/her information, knowledge, and belief. (T)

RECEIVED
AUG 19 2026
STATE OF ALASKA
REGULATORY COMMISSION OF ALASKA

ACCESS SERVICES

3. Carrier Common Line Access Service (Cont'd)

3.5 Reporting of Access Minutes

The following section shall be used to describe the calculations and assumptions made regarding access minutes of use that will be reported to the Telephone Company by the ICCs.

The access minutes will include but will not necessarily be limited to the following information:

Measured Switched Access Minutes of Use.

Assumed Switched Access Minutes of Use.

(D)

All switched access minutes will be reported.

D – Deleted language regarding the billing of wholesale users on behalf of wholesale providers as AECA is discontinuing this service offering.

RECEIVED

JUN 1 6 2011

STATE OF ALASKA
REGULATORY COMMISSION OF ALASKA

ACCESS SERVICES

3. Carrier Common Line Access Service (Cont'd)

3.5 Reporting of Access Minutes (Cont'd) (T)

3.5.1 Estimating Access Minutes

A. AECA Estimation of Measured ICC's Minutes

When the ICC fails to provide measured ICC minutes will be made by the Telephone Company as follows: (T)

1. The estimate will be based on the prior submissions and/or other known and measurable observations at the time of the estimate.
2. The estimate will not be a detailed estimate, but will be completed in order to issue the bill on a timely basis.
3. When developing the estimate, the Telephone Company may base its analysis on a worst-case basis to preclude underestimation of the ICC's minutes. (T)

RECEIVED

DEC 21 1998

State of Alaska
Public Utilities Commission

ACCESS SERVICES

3. Carrier Common Line Access Service (Cont'd)

RESERVED FOR FUTURE USE

(D)

(D)

Pursuant to Order No. 7 in Docket R-97-5 and R-97-6

RECEIVED

DEC 14 2018

STATE OF ALASKA
REGULATORY COMMISSION OF ALASKA

ACCESS SERVICES

3. Carrier Common Line Access Service (Cont'd)

3.6 Rate Regulation

A. The Carrier Common Line Access Charge will be billed as Essential Network Support to the Alaska Universal Service Administrative Company (AUSAC) under this tariff in accordance with the regulations as set forth below. (N)

B. Essential Network Support is determined by dividing the amount equal to the amount of Carrier Common Line Support received for the year ended December 31, 2016 by twelve. The ENS amount is frozen at that level. **(D)(N)**

C. AECA will continue to use the frozen Essential Network Support amount, to be recovered from AUSAC pursuant to this tariff, in calculating the monthly ENS payable under this tariff until it is superseded by a subsequent order of the RCA. (D) (N)

RECEIVED

JUN 16 2011

STATE OF ALASKA
REGULATORY COMMISSION OF ALASKA

ACCESS SERVICES

3. Carrier Common Line Access Service (Cont'd)

3.6 Rate Regulation (Cont'd)

AECA will adjust each ICC's appropriate prior monthly bill to account for any over or under payments made during the previous eighteen month period. The net effect of these adjustments will be reflected in the next month's bill as a separate line item. The penalty provisions in the tariff will only apply to any unpaid portion of a bill assessed by the AECA after an ICC refuses to pay a bill underpaid from prior periods as a result of adjustments reported to and made by the AECA. The interest shall be collected by the AECA and paid to those entitled to receive a credit in accordance with Section 2.4.1 (B)(2)(C). Once the AECA receives payment for a billing adjustment, it will immediately issue payment to those entitled to a credit. The AECA will not withhold these funds until it can issue its standard monthly bill.

E. The Commission may investigate flagrant or continued abuses of the adjustment provisions of the tariff and impose penalties where appropriate.

F. The AECA will issue a Request for Proposal (RFP) to obtain professional services to conduct audits if a billing dispute is not resolved as provided for in 2.8 preceding. (C)

Billing for the audit will occur in the following manner:

AECA will bill an ICC for the monthly audit costs. The audit costs shall be listed as a separate line item on the standard access bill to the ICCs. (C) (D)

RECEIVED

NOV 19 2013

STATE OF ALASKA
REGULATORY COMMISSION OF ALASKA

ACCESS SERVICES

3. Carrier Common Line Access Service (Cont'd)

3.6 Rate Regulation (Cont'd)

The ICC shall pay the AECA the audit costs according to the provisions set forth in Section 2.4.1 (B)(2)(a). If an ICC is late in paying or refuses to pay its audit bill, the general AECA penalty and late payment provisions of Section 2.4.1 (B)(2)(b) - (g) will apply. AECA may also seek reimbursement through the bonding/deposit mechanism provided under Section 2.4.1 (A) of the AECA tariff. The AECA shall use the funds collected from the ICCs to pay the audit costs.

(The next current and effective Tariff Sheet is Sheet No. 71) (T)

RECEIVED

DEC 21 1998

State of Alaska
Public Utilities Commission

ACCESS SERVICES

3. Carrier Common Line Access Service (Cont'd) (D)

RESERVED FOR FUTURE USE

(D)

Pursuant to Order No. 7 in Docket R-97-5 and R-97-6

RECEIVED

DEC 21 1998

State of Alaska
Public Utilities Commission

ACCESS SERVICES

3. Carrier Common Line Access Service (Cont'd)

(L)

RESERVED FOR FUTURE USE

(L)

Pursuant to Order No. 7 in Docket R-97-5 and R-97-6

(L) Text relocated to First Revised Sheet No. 70.3

RECEIVED

DEC 21 1998

State of Alaska
Public Utilities Commission

ACCESS SERVICES

3. Carrier Common Line Access Service (Cont'd)

(L)

RESERVED FOR FUTURE USE

(L)

Pursuant to Order No. 7 in Docket R-97-5 and R-97-6

(L) Text relocated to First Revised Sheet No. 70.4

RECEIVED

DEC 21 1998

State of Alaska
Public Utilities Commission

ACCESS SERVICES

3. Carrier Common Line Access Service (Cont'd)

(L)

RESERVED FOR FUTURE USE

(L)

Pursuant to Order No. 7 in Docket R-97-5 and R-97-6

(L) Text relocated to First Revised Sheet No. 70.5

RECEIVED
MAY 22 1991
State of Alaska
Public Utilities Commission

TELEPHONE EXCHANGE CARRIERS OF ALASKA

ACCESS SERVICES

3. Carrier Common Line Access Service (Cont'd)

(D)

(D)

RESERVED FOR FUTURE USE

Pursuant to Order No. 3 in Docket U-91-2

Tariff Advice No. _____ Effective May 7, 1991

Issued: May 22, 1991
Issued By: Alaska Exchange Carriers Association, Inc.
Title: President

RECEIVED
NOV 21 1990
State of Alaska
Public Utilities Commission

TELEPHONE EXCHANGE CARRIERS OF ALASKA

ACCESS SERVICES

3. Carrier Common Line Access Service (Cont'd)

RESERVED FOR FUTURE USE

RECEIVED
NOV 21 1990
State of Alaska
Public Utilities Commission

TELEPHONE EXCHANGE CARRIERS OF ALASKA

ACCESS SERVICES

3. Carrier Common Line Access Service (Cont'd)

RESERVED FOR FUTURE USE

RECEIVED
DEC 21 1998
State of Alaska
Public Utilities Commission

ACCESS SERVICES

3. Carrier Common Line Access Service (Cont'd)

(L)

RESERVED FOR FUTURE USE

(L)

Pursuant to Order No. 7 in Docket R-97-5 and R-97-6
(L) Text relocated to First Revised Sheet No. 70.6

RECEIVED

MAR 11 2005

State of Alaska
Regulatory Commission of Alaska

ACCESS SERVICES

4. End User Access Service

4.1 General Description

This section is to define the relationship of the End User as related to access service. There is a Network Access Fee (NAF) charge element to the end user for intrastate access. (D)(N)

The Telephone Company will provide end user access service to End Users who obtain local exchange service from the Telephone Company under its local exchange tariffs and End Users who obtain intrastate WATS service.

End User Access provides for the use of an End User Common Line (EUCL) and an intrastate WATS service by an end user.

4.2 Limitations

A. A telephone number is not provided with End User Access.

B. Detail billing is not provided with End User Access.

C. Directory listings are not included with End User Access.

D. Intercept arrangements are not included with End User Access.

4.3 Undertaking of the Telephone Company

A. The Telephone Company will provide the use of an EUCL for access to intrastate access services when the End User obtains local telephone exchange service, or an intrastate WATS service.

B. The Telephone Company will be responsible for contacts and arrangements with end users.

RECEIVED
NOV 21 1990
State of Alaska
Public Utilities Commission

TELEPHONE EXCHANGE CARRIERS OF ALASKA

ACCESS SERVICES

4. End User Access Service (Cont'd)

4.4 Payment Arrangements and Credit Allowance

(A) Minimum Period

The minimum period for which EUCL End User Access is provided is the same as that of the service with which it is associated.

(1) Those EUCL's associated with a local exchange telephone service will have the same minimum period as described in the exchange tariff for the associated service.

(2) Those EUCL's associated with an intrastate WATS Access Line will have the same minimum period as described in the state tariff for intrastate WATS service.

(B) Cancellation of Application

End User Access is cancelled when the order for the associated service is cancelled. No cancellation charges apply.

(C) Changes to Orders

When changes are made to orders for local exchange service or the intrastate WATS access line associated with End User Access, any necessary changes will also be made for End User Access. No charges will apply.

Pursuant to Orders No. 6 & 7 in Docket U-90-26

RECEIVED
NOV 21 1990
State of Alaska
Public Utilities Commission

TELEPHONE EXCHANGE CARRIERS OF ALASKA

ACCESS SERVICES

4. End User Access Service (Cont'd)

4.4 Payment Arrangements and Credit Allowance (Cont'd)

(D) Allowance for Interruptions

When End User Access Service is interrupted, the credit allowance for interruptions as set forth in 2.4.3 preceding applies.

Pursuant to Orders No. 6 & 7 in Docket U-90-26

RECEIVED
NOV 21 1990
State of Alaska
Public Utilities Commission

TELEPHONE EXCHANGE CARRIERS OF ALASKA

ACCESS SERVICES

4. End User Access Service (Cont'd)

RESERVED FOR FUTURE USE

Pursuant to Orders No. 6 & 7 in Docket U-90-26

RECEIVED
NOV 21 1990
State of Alaska
Public Utilities Commission

TELEPHONE EXCHANGE CARRIERS OF ALASKA

ACCESS SERVICES

4. End User Access Service (Cont'd)

RESERVED FOR FUTURE USE

Pursuant to Orders No. 6 & 7 in Docket U-90-26

RECEIVED
APR 30 1997
ALASKA PUBLIC UTILITIES COMM.

ACCESS SERVICES

5. Ordering Options for Switched and Special Access Service

5.1 General

This section sets forth the order related regulations and charges for Switched, Special, and Public Packet Data (C) Network Access Services. These regulations and charges (C) are in addition to other applicable regulations and charges as set forth in other sections of this tariff.

5.1.1 Ordering conditions

A customer may order any number of services of the same type and between the same premises on a single Access Order.

The customer shall provide all information necessary for the Telephone Company and/or the AECA to provide and bill for the requested service. In addition to the order information required in 5.2 following, the customer must also provide:

- Customer name and premises address(es).
- Billing name and address (when different from customer name and address).
- Customer contact name(s) and telephone number(s) for the following provisioning activities:
  1. order negotiation
  2. order confirmation
  3. interactive design
  4. installation
  5. billing

Service Installations

The Telephone Company will provide the Access Service in accordance with the customer's requested service date, subject to the constraints established by the Telephone Company schedule of applicable service dates.

RECEIVED

JUN 1 1 2009

STATE OF ALASKA
REGULATORY COMMISSION OF ALASKA

ACCESS SERVICES

5. Ordering Options for Switched and Special Access Service (Cont'd)

5.1 General (Cont'd)

5.1.2 Provision of Other Services

Other services as described in 9.1 and 9.2 may be ordered in conjunction with the order for Access Service. All rates and charges set forth in Exchange Carrier Rate Sheets as set forth in Section 13 and Section 14, following, for additional engineering, additional labor and miscellaneous services will apply in addition to the rates and charges for the Access Service with which they are associated. (N)

5.1.3 Expedited Orders

A customer may request an expedited service date. When this situation occurs, charges will be applicable as set forth in Section 9. The Telephone Company will provide an estimate of the charges to the customer. The customer must accept the price estimate prior to the Telephone Company's performing the expedite. The actual charges billed to the customer will be no more than 10 percent over the estimate.

To develop, determine and bill the customer the extraordinary costs which may be involved, the Special construction terms and conditions as set forth in Section 10 will be used by the Telephone Company.

5.2 Access Order

An Access Order is used by the Telephone Company to provide a customer Access Service as follows:

- Switched Access Service as set forth in Section 6.
- Special Access Service as set forth in Section 7.
- WATS Access Line as set forth in Section 6.
- Other Services as set forth in Section 9.

RECEIVED
MAY 01 2015
STATE OF ALASKA
REGULATORY COMMISSION OF ALASKA

ACCESS SERVICES

5. Ordering Options for Switched and Special Access Service (Cont'd)

5.2 Access Order (Cont'd)

Except as provided for in Section 5.2(D), following, when ordering Switched Access service, the customer must specify the directionality of the service and whether the service is to be provided as (1) Direct Trunked Transport from the serving wire center to the end office or (2) Direct Trunked Transport from the serving wire center to a tandem which connects with Tandem Switched Transport from the tandem to the end office. When all or a portion of service is ordered as Direct Trunked Transport, the customer must specify the type and quantity of Direct Trunked Transport facility (e.g., Voice Grade, High Capacity DS1 or DS3, or Synchronous Optical Channel OC3 or OC12) and the hubs or ADM equipped wire centers involved. (N)

Except as provided for in Section 5.2(D), following, the Customer must also specify the type of Entrance Facility to be used for Switched Access (e.g., Voice Grade, High Capacity or Synchronous Optical Channel). For High Capacity or Synchronous Optical Channel Entrance Facilities, the customer must specify the facility assignment and the channel assignment for each trunk. (N)

With the Exception of Ethernet Switched Access Local Transport (ESALT) Direct Trunked Transport, Direct Trunked Transport is available at all tandems and at all end offices except those end offices identified in National Exchange Carrier Association, Inc. Tariff F.C.C. NO. 4. as not having the capability to provide Direct Trunked Transport. ESALT Direct Trunked Transport is only available at those suitably equipped tandems and end offices identified in National Exchange Carrier Association, Inc. Tariff F.C.C. No. 4. Direct Trunked Transport is not available: (1) from end offices that provide equal access through a Centralized Equal Access arrangement, or (2) from end offices that lack recording or measurement capability. (N) (N) (N) (N)

When the customer has both Tandem Switched Transport and Direct Trunked Transport at the same end office, the customer will be provided Alternate Traffic Routing as set forth in Section 6.2.A, following. A customer's Local Transport may be connected to the Entrance Facility of another customer, providing the other customer submits a Letter of Authorization for this connection and assumes full responsibility for the cost of the Entrance Facility.

RECEIVED
NOV 21 1990
State of Alaska
Public Utilities Commission

ACCESS SERVICES

5. Ordering Options for Switched and Special Access Service (Cont'd)

5.2 Access Order (Cont'd)

(A) Feature Group A

Orders for Feature Group A Switched Access Service shall be in lines.

When placing an order for Feature Group A Switched Access Service, the customer shall provide the following information in addition to that set forth in 5.1 preceding:

- The number of lines and the first point of switching (i.e., Dial Tone Office)
- Optional Features
- Whether the Off-hook Supervisory Signaling is provided by the customer's equipment before the called party answers, or is forwarded by the customer's equipment when the called party answers
- Lines to be provided as single lines
- Lines to be arranged in multiline hunt group arrangements
- Directionality (1-way, 2-way, etc.)
- A projected percentage of interstate use (PIU)
- The Interexchange Carrier to which the service is connected or, in the alternative, specify the means by which the FGA access communications are transported.

(B) Feature Group B

Orders for Feature Group B Switched Access Service shall be in trunks.

When placing an order for Feature Group B Service, the customer shall provide, the following information in addition to that set forth in 5.1 preceding:

- The number of trunks
- The end office when direct routing is desired
- The access tandem office when FGB is provided through a centralized equal access arrangement
- Optional Features
- Trunks to be provided as single trunks
- Trunks to be arranged in trunk group arrangements
- Directionality (1-way, 2-way, etc.)

Pursuant to Orders No. 6 & 7 in Docket U-90-26

RECEIVED
MAY 01 2015
STATE OF ALASKA
REGULATORY COMMISSION OF ALASKA

ACCESS SERVICES

5. Ordering Options for Switched and Special Access Service (Cont'd)

5.2 Access Order (Cont'd)

B. Feature Group B (Cont'd) (T)

- A projected percentage of interstate use (PIU)
- The Interexchange Carrier to which the service is connected or, in the alternative, specify the means by which the FGB access communications are transported
- The access code dialing arrangement (i.e., a uniform access code of 950-1XXX or 950-0XXX or an Abbreviated Dialing Arrangement (ADA) access code of N or NX)

C. Feature Group C, Feature Group D and Interim NXX Translation

The ordering requirements for Feature Group D Switched Access Services used in conjunction with ESALT are specified in Section 5.2(D), following. (N) (N)

When placing an order for Feature Group C and D Switched Access Service, the customer shall provide:

- The number of BHMC from the customer designated premises to the end office by Feature Group and by type of BHMC, or
- The number of trunks desired between customer designated premises and an entry switch
- Optional Features
- Interim NXX Translation options

(L)

(L) Text relocated to Third Revised Sheet No. 88

RECEIVED
MAY 01 2015
STATE OF ALASKA
REGULATORY COMMISSION OF ALASKA

ACCESS SERVICES

5. Ordering Options for Switched and Special Access Service (Cont'd)

5.2 Access Order (Cont'd)

C. Feature Group C, Feature Group D and Interim NXX Translation (Cont'd) (T) (L)

When BHMC information is provided it is used to determine the number of transmission paths as set forth in 6.6.5 following.

The BHMC may be determined by the customer in the following manner. For each day (8am to 11pm, Monday through Friday, excluding national holidays), the customer shall determine the highest number of minutes of use for a single hour (e.g., 55 minutes in the 10-11am hour). The customer shall, for the same hour period (i.e., busy hour) for each of twenty consecutive business days, pick the twenty consecutive business days in a calendar year which add up to the largest number of minutes of use. Both originating and terminating minutes shall be included. The customer shall then determine the average busy hour minutes of capacity (i.e., BHMC by dividing the larger number of minutes of use figure for the same hour period for the consecutive twenty business day period by 20. This computation shall be performed for each end office the customer wishes to serve. These determinations thus establish the forecasted BHMC for each end office. (L)

Customers may at their option, order FGD by specifying the number of trunks desired between customer designated premises and an end office or access tandem. When ordering by trunk quantities rather than BHMC quantities to an access tandem, the customer must also provide the Telephone Company an estimate of the amount of traffic it will generate to and/or from each end office subtending the access tandem to assist the Telephone Company in its own efforts to project further facility requirements.

When Feature Group C or D is ordered with the Interim NXX Translation optional feature, the customer shall specify the Service Access Code(s) (e.g. 900) and their associated NXX code(s). The initial and subsequent orders to add, change or delete Interim NXX Translation codes shall be placed separately or in combination with orders to change Feature Group C or D Switched Access BHMC or trunks. Customer assigned NXX codes which have not been ordered will be blocked. (L1)

(L) Text relocated from Original Sheet No. 87
(L1) Text relocated to First Revised Sheet No. 88.1

RECEIVED
MAY 01 2015
STATE OF ALASKA
REGULATORY COMMISSION OF ALASKA

ACCESS SERVICES

5. Ordering Options for Switched and Special Access Service (Cont'd)

5.2 Access Order (Cont'd)

C. Feature Group C, Feature Group D and Interim NXX Translation (Cont'd) (T)

Orders for the Interim NXX Translation optional feature shall not be required until such time as a customer requests Interim NXX Translation of Service Access Codes. Upon receipt of such order, the Telephone Company shall notify the MTS/WATS provider of the activation of the Interim NXX Translation Service for the Service Access Code. Following such initial activation, all customers are required to place orders for Interim NXX Translation of the Service Access Code and the Interim NXX Translation charge for the Service Access Code shall apply as set forth in 13.2.1 (C). (L) (L)

Wholesale users are required to order access from each Telephone Company where they intend to originate or terminate calls. The access service request must identify the wholesale provider. The wholesale provider is responsible for specifying trunking requirements for switched wholesale service. The wholesale user is responsible for specifying trunking requirements for dedicated wholesale service.

D. Ethernet Switched Access Local Transport (N)

When placing an order for Ethernet Switched Access Local Transport (ESALT) and required Feature Group D Switched Access Service as described in Section 6.3, following, the customer must specify:

- The customer designated premises;
- The number and bandwidth capacity for each ESALT Entrance Facility and, where required, the number, type and bandwidth capacity for each ESALT Direct Trunked Facility, ESALT Direct Trunked Termination and ESALT Class of Service/Quality of Service;
- The type of signaling interface and bearer channel format requested that are compatible with the Technical Reference transmission standards listed in Section 6.3, following;
- The number of BMHC between the ESALT SWC and each end office to which the customer wants to terminate interexchange voice traffic originated on its IP based network and/or receive interexchange voice traffic originated on the Telephone Company's network; and
- A projected Percentage of Interstate Use (PIU) as set forth in Section 2.3.9, preceding. (N)

BHMC information is used to determine the number of transmission paths as set forth in Section 6.6.5, following. (L1)

(L) Text relocated from Second Revised Sheet No. 88
(L1) Text relocated to Fifth Revised Sheet No. 89

RECEIVED
JUN 21 2021
STATE OF ALASKA
REGULATORY COMMISSION OF ALASKA

ACCESS SERVICES

5. Ordering Options for Switched and Special Access Service (Cont'd)

5.2 Access Order (Cont'd)

E. Special Access Service may be ordered for connection with FGC/FGD Switched Access Service at Telephone Company-designated WATS Service Offices (WSOs) for the provision of WATS or WATS-type Services and may be ordered separately by a customer other than the customer which orders the FGC/FGD Switched Access Service.

For the Special Access Service, the customer shall specify the customer designated premises at which the Special Access Service terminates, the type of line (i.e., two-wire or four-wire), the type of calling (i.e., originating, terminating, or two way) and the type of supervisory signaling. When the optional screening, switching and/or recording functions are not provided at the customer's serving wire center, Channel Mileage Facility as set forth in 7.2.1 following, must be ordered between that wire center and the nearest WSO where the screening, switching and/or recording functions can be provided. (T)

F. For Toll Free Data Base Access Service, as described in 6.2 following, the customer must order FGC or FGD to those access tandems or end offices designated as Service Switching Points (SSP) for Toll Free Data Base Service or to those non-SSP equipped end offices that can accommodate direct trunking of originating 800 series calls. SSP equipped end offices, access tandems and non-SSP equipped end offices that can accommodate direct trunking of originating 800 series calls are designated in National Exchange Carrier Association, Inc. Tariff F.C.C NO. 4, Wire Center Information. All traffic originating from end offices not equipped to provide SS7 signaling and routing and not able to accommodate direct trunking of originating 800 series calls requires routing via an access tandem where SSP functionality is available. (T) (T) (T) (T) (T)

Normally, Direct Trunked Transport of originating 800 series calls from an end office is available only from Service Switching Point (SSP) equipped end offices. However, certain SSP equipped end offices cannot accommodate the direct trunking of the 800 series (other than the 800 service access code) service access code. These end offices are identified in National Exchange Carrier Association, Inc., Tariff F.C.C. NO. 4, Wire Center Information. Additionally, certain non-SSP equipped end offices can accommodate direct trunking of originating 800 series calls. These end offices are also identified in National Exchange Carrier Association, Inc., Tariff F.C.C. NO. 4, Wire Center Information. (T) (T)

RECEIVED
MAY 01 2015
STATE OF ALASKA
REGULATORY COMMISSION OF ALASKA

ACCESS SERVICES

5. Ordering Options for Switched and Special Access Service (Cont'd)

5.2 Access Order (Cont'd)

G. Frame Relay Access Service (L) (T)

When ordering Frame Relay Access Service, a minimum of two port connections are required for data to be transported between customer designated premises.

When placing an order for Frame Relay Access Service the customer must specify:

- the number of Permanent Virtual Connections (PVCs) required;
- the location of the ports for each PVC;
- the Committed Information Rates (CIRs) that will be associated with each PVC;
- that the traffic consists of less than ten percent interstate traffic and more than ten percent intrastate traffic. (L)

The port connecting the special access facility to the telephone company frame relay switch must be ordered and provided at the same speed as the special access facility.

When connecting to the port of another customer, the ordering customer must obtain authorization from the other customer.

When an extended PVC is ordered, the customer is responsible for placing the order with all telephone companies involved.

H. Mixed Use Facilities – (T)

Switched and Special Access

Mixed use is the provision of both Switched and Special Access Services over the same High Capacity or Synchronous Optical Channel facilities. Mixed use facilities to a hub or ADM equipped wire center will be ordered and provided as Special Access Service. Where mixed use is employed, individual services utilizing these facilities must be ordered either as Switched Access Service or Special Access Service as further elaborated and set forth in Sections 6 and 7, following. When placing the order for the individual services(s), the customer must specify a channel assignment for each service ordered.

(L) Text Relocated from Fourth Revised Sheet No. 89 (L1)
(L1) Text Relocated to First Revised Sheet No. 89.1.1

RECEIVED
MAY 01 2015
STATE OF ALASKA
REGULATORY COMMISSION OF ALASKA

ACCESS SERVICES

5. Ordering Options for Switched and Special Access Service (Cont'd)

5.2 Access Order (Cont'd)

(N)

H. Mixed Use Facilities (Cont'd)

Ethernet Switched Access Local Transport and Ethernet Transport Service

Mixed use is also the provision of both Ethernet Switched Access Local Transport (ESALT) and Ethernet Transport Service (ETS) over the same Ethernet Transport Service facilities. Mixed use facilities to an ETS SWC will be ordered and provided as Ethernet Transport Service. Where mixed use is employed, individual services utilizing these facilities must be ordered either as ESALT or ETS. (N)

I. Ethernet Transport Service (ETS) (T) (L)

When placing an order for ETS, the customer must specify:

- the customer designated premises;
- the type(s) of ETS Port interface(s);
- the speed for each ETS port;
- the number and bandwidth capacity for each ETS Channel Termination (ETS CT), ETS Ethernet Virtual Connection (ETS EVC) and ETS Extended Ethernet Virtual Connection (ETS E-EVC) associated with an ETS Port;
- options desired, if applicable;
- that the traffic consists of more than 90 percent intrastate traffic.

When connecting to the ETS Port of another customer, the ordering customer must obtain authorization from the other customer (L)

Discontinuance charges as specified in Section 12, following, will not apply when an existing ETS Term Discount Plan customer: 1) orders the disconnect of an existing committed ETS Port and its replacement by one or more newly installed committed ETS Ports(s) as described in Section 12, following, and 2) complies with the following requirements:

- The customer's orders for the disconnection of the existing committed ETS Port and the installation of the replacement committed ETS Ports(s) are submitted to the Telephone Company at the same time.
- Both orders specifically reference the replacement of the existing committed ETS Port with the newly installed committed ETS Port in the customer's existing ETS Term Discount Plan.

The ETS Term Discount Plan is only available from those Telephone Companies listed in Section 14, following.

(L) Text Relocated from Second Revised Sheet No. 89.1

RECEIVED

JAN 19 2011

STATE OF ALASKA
REGULATORY COMMISSION OF ALASKA

ACCESS SERVICES

5. Ordering Options for Switched and Special Access Service (Cont'd)

5.2 Access Order (Cont'd)

5.2.1 Special Access Service

There is a Special Access Optional Rate Plan that offers a term discount:

Synchronous Optical Channel Service (SOCS) Optional Rate Plan, as described in Section 7, following. (T)

The Synchronous Optical Channel Service Optional Rate Plan is a Term Discount plan. When ordering a Synchronous Optical Channel Service Term Discount Optional Rate Plan, upgrade to the plan, or an SOCS Optional Rate Plan Replacement, discontinuance charges, as specified in Section 7, following, will not apply if the conditions set forth in Section 7, following, are met and the customer provides the following ordering information: (T)

Term Discounts – Upgrades in Capacity (OC3/OC3c to OC12)

- The customer's order for the disconnect of the existing OC3/OC3c Service and the installation of the new OC12 Service are received at the same time and specifically reference the application of upgrade in capacity.
- The customer's disconnect order for the existing OC3/OC3c Service must reference the OC12 Service installation order.

Customer orders to install and disconnect OC3/OC3c or OC12 Services provided under a Term Discount plan where the number of OC3s, OC3cs, or OC12s remains constant and the customer wishes to maintain the existing Term Discount period and minimum service period must:

- Be received at the same time.
- Reference continuation of the existing Term Discount period and the minimum service period on both the installation and disconnect orders.

(L)

(L) text relocated to Original Sheet No. 89.1.2.1

RECEIVED

JAN 19 2011

STATE OF ALASKA
REGULATORY COMMISSION OF ALASKA

5. Ordering Options for Switched and Special Access Service (Cont'd)

5.2 Access Order (Cont'd)

5.2.1 Special Access Service (Cont'd)

Term Discounts – Optional Rate Plan Replacements

Discontinuance charges as specified in Section 7, following, will not apply when an existing SOCS Optional Rate Plan customer:

- Orders the disconnect of its existing committed SOCS channel(s) and installation of one or more newly committed ETS Port(s) as described in Section 7, following, and complies with the following requirements:
  - The customer's orders for the disconnection of its existing committed SOCS channel(s) and installation of its replacement newly committed ETS Ports(s) are submitted to the Telephone Company.
  - All orders specifically reference the replacement of the existing committed SOCS channel(s) with one or more newly committed ETS Port(s) in the customer's new or existing ETS Term Discount Plan at the same time.

The Syncronous Optical Channel Service Term Discount Optional Rate Plan is only available from those Telephone Companies listed in Section 14, following. (L)

(L) text relocated from First Revised Sheet No. 89.1.2

RECEIVED
JUN 11 2009
STATE OF ALASKA
REGULATORY COMMISSION OF ALASKA

ACCESS SERVICES

5. Ordering Options for Switched and Special Access Service (Cont'd) (L)

5.3 Reserved for Future Use

5.4 Access Order Service Intervals

To the extent the Access Service can be made available with reasonable effort, the Telephone Company will provide Access Service in accordance with the customer's requested interval. The Telephone Company is not responsible for any delays caused by any other connecting exchange telephone company in the provision of service to the customer's point of termination.

If in order to meet the customer's requested service date, work must be performed outside scheduled work hours, Additional Labor charges as described in Section 9 will apply. (L)

(L) Text relocated from First Revised Sheet No. 89.1

RECEIVED

JUN 11 2009

STATE OF ALASKA
REGULATORY COMMISSION OF ALASKA

5. Ordering Options for Switched and Special Access Service (Cont'd)

5.5 Access Order Change Charges

The customer may request a change of its Access Order prior to the service date. The Telephone Company will make every effort to accommodate a requested change when it is able to do so with the normal work force assigned to complete such an order within normal business hours. If the change cannot be made with the normal work force during normal business hours, the Telephone Company will notify the customer that additional labor and/or engineering charges will apply. If the customer still desires the Access Order Change and agrees to any additional charges which may apply, the Telephone Company will schedule a new service date. Additional labor or engineering charges as described in Section 9 will apply.

Any increase in the number of Special Access Service channels or Switched Access Service lines, trunks, busy hour minutes of capacity or Frame Relay Ports, PVCs or CCS/SS7 Port (C)
Terminations, and/or ETS Ports will be treated as a new Access Order (for the increased (C)
amount only).

Any decrease in the number of ordered Special Access Service channels or Switched Access Service busy hour minutes of capacity will be treated as a partial cancellation and the conditions as set forth in 5.6.4 following will apply.

If order changes are necessary to satisfy the transmission performance for a Special Access Service ordered by a customer, these changes will be made without order change charges being incurred by the customer.

RECEIVED

JAN 19 2011

STATE OF ALASKA
REGULATORY COMMISSION OF ALASKA

ACCESS SERVICES

5. Ordering Options for Switched and Special Access Service (Cont'd)

5.6 Selection of Facilities for Access Orders

The Telephone Company will make a reasonable effort to accommodate a customer request for a specific transmission path.

5.7 Charges Associated with Access Ordering

5.7.1 Access Order Charge

The Access Order Charge is applied to all customer requests for new Special and Switched Access Service, Public Packet Data Network Access Service and Directory Assistance Service. In addition, the Access Order Charge is applicable to customer requests for additions, changes or rearrangements to existing Special and Switched Access Service, Public Packet Data Network Access Service and Directory Assistance Service with the following exceptions:

The Access Order Charge does not apply:

- When a Service Date Change Charge is applicable.
- When a Design Change Charge is applicable.
- To administrative changes as set forth in 6.8.1(A) and 7.2.2(B) following.
- When a change to a pending order does not result in the cancellation of the pending order and the issuance of a new order.
- When a Miscellaneous Service Order charge is applicable.
- When a Presubscription Charge is applicable.
- When a Telephone company initiated network reconfiguration requires a customer's existing access service to be reconfigured.
- When a SOCS Optional Rate Plan customer makes changes to its existing SOCS Optional Rate Plan as specified in Section 7, following, for SOCS Optional Rate Plan Replacements. (N)
- When an ETS Design Change Charge is applicable.
- When an ETS customer establishes a new ETS Term Discount Plan or makes changes to an existing ETS Term Discount Plan (N)

RECEIVED

JAN 19 2011

STATE OF ALASKA
REGULATORY COMMISSION OF ALASKA

ACCESS SERVICES

5. Ordering Options for Switched and Special Access Service (Cont'd)

5.7 Charges Associated with Access Ordering

5.7.1 Access Order Charge (Cont'd)

The Access Order Charge will be applied on a per order basis to each order received by the Telephone Company or copy of an order received by the Telephone Company pursuant to 5.2 preceding, except by the Telephone Company applying the Interim NXX Translation charge, and is in addition to other applicable charges as set forth in this and other sections of (T) this tariff.

RECEIVED

JUN 1 1 2009

STATE OF ALASKA
REGULATORY COMMISSION OF ALASKA

ACCESS SERVICES

5. Ordering Options for Switched and Special Access Service (Cont'd)

5.7 Charges Associated with Access Ordering (Cont'd)

5.7.2 Miscellaneous Service Order Charge

A Miscellaneous Service Order Charge, as set forth in Section 13 and Section 14, following, applies to any service, or combination of services ordered simultaneously from Section 9 of the Tariff for which a service order is not already pending (with the exception of Presubscription 9.3.4 which does not have the charge applied). The Miscellaneous Service Order Charge is an administrative charge designed to compensate for the expenses associated with service order issuance. (N)

The charge always applies to the following services since a pending service order would not exist:

- Overtime Repair (9.2.2),
- Standby Repair (9.2.3),
- Testing and Maintenance with Other Telephone Companies other than when in conjunction with Acceptance Testing (9.2.4),
- Other labor (9.2.6),
- Maintenance of Service (9.3.2),
- Unauthorized PIC Change (XXXXX).

The Miscellaneous Service Order Charge will also apply to the following services if they are ordered subsequent to the initial installation of the associated access service, thereby necessitating the issuance of another service order:

RECEIVED
AUG 21 1997
ALASKA PUBLIC UTILITIES COMM.

ACCESS SERVICES

5. Ordering Options for Switched and Special Access Service (Cont'd)

5.7 Charges Associated with Access Ordering (Cont'd) (T) (L)

5.7.2 Miscellaneous Service Order Charge (Cont'd)

- Telecommunications Service Priority (9.3.3),
- Additional Engineering (9.1),
- Overtime Installation (9.2.3),
- Standby Acceptance Testing (9.2.3),
- Testing and Maintenance with Other Telephone Companies when in conjunction with Acceptance Testing (9.3.4),
- Additional Cooperative Acceptance Testing (9.3.1(A)(1)) and (9.3.1(B)(1)). (T) (L)

(L1)

(L1)
(L2)

(L2)

(L) Text relocated from First Revised Sheet No. 94.
(L1) Text 5.9.1 relocated to First Revised Sheet No. 91.
(L2) Text 5.8.2 relocated to Second revised Sheet No. 92.

RECEIVED

JUN 1 1 2009

STATE OF ALASKA
REGULATORY COMMISSION OF ALASKA

5. Ordering Options for Switched and Special Access Service (Cont'd)

5.7 Charges Associated with Access Ordering (Cont'd)

5.7.3 Service Date Change

The customer may request a change of service date on a pending Access Order prior to the service date. A change of service date is a change of the scheduled service date by the customer to either an earlier date or a later date which does not exceed 30 calendar days from the original service date.

If the Telephone Company determines that the customer's request can be accommodated without delaying the service dates for orders of other customers, the service date will be changed and the Service Date Change Charge, as set forth in Section 13 and Section 14, following, will be applied to the order. (N)

If the service date is changed to an earlier date, and the Telephone Company determines additional labor or extraordinary costs are necessary to meet the earlier service date requested by the customer, the customer will be notified by the Telephone Company that charges as set forth in Section 9 Additional Labor and/or Engineering will apply. Such charges will apply in addition to the Service Date Change Charge.

If the requested service date exceeds 30 calendar days following the original service date, and the Telephone Company determines that the customer's request can be accommodated, the Telephone Company will cancel the original order and apply the Cancellation Charges as set forth in Section 5.8.3. following. A new Access Order with a new service date will be issued. The Service Date Change Charge will not apply, however, the Access Order Charge will apply to the new order.

RECEIVED

JUN 1 1 2009

STATE OF ALASKA
REGULATORY COMMISSION OF ALASKA

5. Ordering Options for Switched and Special Access Service (Cont'd)

5.7 Charges Associated with Access Ordering (Cont'd)

If the service date is changed due to a design change as set forth in 5.7.4 following, the Service Date Change Charge will apply.

5.7.4 Design Change

The customer may request a design change to the service ordered prior to the requested service date. A design change is any change to an Access Order which requires engineering review. An engineering review is a review by Telephone Company personnel, of the service ordered and the requested changes to determine what changes in the design, if any, are necessary to meet the changes requested by the customer. Design changes include such things as the addition or deletion of optional features or functions or a change in the type of Transport Termination (Switched Access only), type of channel interface, type of Interface Group or technical specification package, or a change in the destination of PVC, speed of PVC, an Ethernet Transport Service (ETS) Ethernet Virtual Connection, and ETS Extended Ethernet Virtual Connection, or speed of the end user port. Design changes do not include a change of customer designated premises, first point of switching, Feature Group type or Special Access Service channel type. Changes of this nature require the issuance of a new order and the cancellation of the original order with appropriate cancellation charges applied. (C)

RECEIVED

JUN 1 1 2009

STATE OF ALASKA
REGULATORY COMMISSION OF ALASKA

ACCESS SERVICES

5. Ordering Options for Switched and Special Access Service (Cont'd)

5.7 Charges Associated with Access Ordering (Cont'd)

5.7.4 Design Change (Cont'd)

The Telephone Company will review the requested change, notify the customer whether the change is a design change, if the change can be accommodated and if a new service date is required. If the customer authorizes the Telephone Company to proceed with the design change, a Design Change Charge as set forth in Section 13 and Section 14, following, will (C) apply in addition to the charge for Additional Engineering as set forth in Section 13 and Section 14, following. If a change of service date is required, the Service Date Change (C) Charge as set forth in Section 13 and Section 14, following, will also apply. The Access (C) Order Charge as specified in Section 13 and Section 14, following, does not apply. (C)

RECEIVED
AUG 21 1997
ALASKA PUBLIC UTILITIES COMM.

TELEPHONE EXCHANGE CARRIERS OF ALASKA

ACCESS SERVICES

5. Ordering Options for Switched and Special Access Service (Cont'd)

5.7 Charges Associated with Access Ordering

(T) (L)

(L)

(L) Text relocated to Second Revised Sheet No. 96.

Tariff Advice No. 35 Effective: August 25, 1997

Issued:
Issued By: Alaska Exchange Carriers Association, Inc.
By: Ruth A. Steele Title: President

RECEIVED
MAY 01 2015
STATE OF ALASKA
REGULATORY COMMISSION OF ALASKA

ACCESS SERVICES

5. Ordering Options for Switched and Special Access Service (Cont'd)

5.8 Minimum Periods and Cancellation

5.8.1 Minimum Periods

The minimum period for part-time Video and Program Audio Special Access Services is one day even though the service will be provided only for the duration of the event specified on the order (e.g., one-half hour, two hours, five hours, etc.). The minimum period for Synchronous Optical Channel Service is as set forth in Section 7, following. The minimum period for Ethernet Transport Service is as set forth in Section 12, following.

The minimum period for Ethernet Switched Access Local Transport is as set forth in Section 6.2.A, following. (N) (N)

Switched Access Service has no minimum period. The minimum period for which all other Access Service is provided and for which charges are applicable is one month.

5.8.2 Development of Minimum Period Charges

When Access Service is disconnected after commencement of service but prior to the expiration of the minimum period, charges are applicable for the balance of the minimum period. A discount constitutes facilities being returned to available inventory.

The Minimum Period Charge for monthly billed services will be determined as follows:

A. For Switched Access Service, the charge for a month or fraction thereof is equal to the applicable recurring charges plus any nonrecurring and/or special construction charge(s) that may be due.

B. For Special Access Service, flat rated Switched Access Service, and Public Packet Data Network Service the charge for a month or fraction thereof is the applicable monthly rates for the appropriate channel type plus any optional features, nonrecurring and/or special construction charge(s) that may apply.

RECEIVED

JUN 1 1 2009

STATE OF ALASKA
REGULATORY COMMISSION OF ALASKA

5. Ordering Options for Switched and Special Access Service (Cont'd)

5.8 Minimum Periods and Cancellations (Cont'd)

5.8.2 Development of Minimum Period Charges (Cont'd)

C. The Minimum Period Charge for part-time Video and Program Audio Services is the applicable daily rate for the appropriate channel type as set forth in Section 13 and Section 14, following. (N)

5.8.3 Cancellation of an Access Order

A. A customer may cancel an Access Order for the installation of service on any date prior to the service date. The cancellation date is the date the Telephone Company receives written or verbal notice from the customer that the order is to be cancelled. The verbal notice must be followed by written confirmation within 10 days. If a customer or a customer's end user is unable to accept Access Service within 30 calendar days after the original service date, the customer has the choice of the following options:

- The Access Order shall be cancelled and charges set forth in (B) following will apply or,
- Billing for the service will commence.

In such instances, the cancellation date or the billing date, depending on which option is selected by the customer, shall be the 31st day beyond the original service date of the Access Order.

RECEIVED
AUG 21 1997
ALASKA PUBLIC UTILITIES COMM.

TELEPHONE EXCHANGE CARRIERS OF ALASKA

ACCESS SERVICES

5. Ordering Options for Switched and Special Access Service (Cont'd)

5.8 Minimum Periods and Cancellations (Cont'd) (C)

5.8.3 Cancellation of an Access Order (Cont'd) (C)

(B) When a customer cancels an Access Order for the installation of service, a Cancellation Charge will apply as follows: (L)

(1) Installation of Switched, Special Access Service or Public Packet Data facilities is considered to have started when the Telephone Company incurs any cost in connection there with or in preparation thereof which would not otherwise have been incurred. (C)

(C) (L)

(L1)

(L1)

(L2)

(L2)

(L) Text relocated from First Revised Sheet No. 98.
(L1) Text 5.9.3(2)&(3) and 5.9.3(C) relocated to Second Revised Sheet No. 100.
(L2) Text 5.9.3(D) relocated to Original Sheet No. 100.1.

Tariff Advice No. 35 Effective: August 25, 1997

Issued: _____
Issued By: Alaska Exchange Carriers Association, Inc.
By: Ruth A. Stade Title: President

RECEIVED

JUN 1 1 2009

STATE OF ALASKA
REGULATORY COMMISSION OF ALASKA

5. Ordering Options for Switched and Special Access Service (Cont'd)

5.8 Minimum Periods and Cancellations (Cont'd) (N)

5.8.3 Cancellation of an Access Order (Cont'd)

2. Where the customer cancels an Access Order Prior to the start of installation of access facilities, no charges shall apply.

3. Where installation of access facilities has been started prior to the cancellation, the charges specified in (a) or (b) following, <u>whichever is lower, shall apply</u>.

   a. A charge equal to the costs incurred in such installation, less estimated net salvage. Such costs include the nonrecoverable costs of equipment and material ordered, provided or used, plus the nonrecoverable cost of installation and removal including the costs of engineering, labor, supervision, transportation, rights-of-way and other associated costs;

   b. The charge for the minimum period of Switched Access, Special Access or Public Packet Data Network Service ordered by the customer as set forth in Section 13 and Section 14, following.

C. When a customer cancels an order for the discontinuance of service, no charges apply for the cancellation.

RECEIVED

JUN 1 1 2009

STATE OF ALASKA
REGULATORY COMMISSION OF ALASKA

ACCESS SERVICES

5. Ordering Options for Switched and Special Access Service (Cont'd)

5.8 Minimum Periods and Cancellation (Cont'd)

5.8.3 Cancellation of an Access Order (Cont'd)

D. If the Telephone Company misses a service date by more than 30 days and such delay is not requested or caused by the customer (excluding those circumstances where the date is missed due to acts of God, governmental requirements, work stoppages and civil commotions), the customer may cancel the Access Order without incurring cancellation charges.

5.8.4 Partial Cancellation Charge

Any decrease in the number of ordered Special Access Service channels or Switched Access Service lines, trunks, or busy hour minutes of capacity or Frame Relay Ports and/or PVC or CCS/SS7 Port terminations, and/or ETS Ports, ETS Channel Terminations, ETS Ethernet Virtual Connections or ETS Extended Ethernet Virtual Connections will be treated as a partial cancellation and charges will be determined as set forth in 5.8.3(B) preceding. (N)

RECEIVED
JUN 21 2021
STATE OF ALASKA
REGULATORY COMMISSION OF ALASKA

ACCESS SERVICES

6. Switched Access Service

6.1 General

Switched Access Service, which is available to customers for their use in furnishing their services to end users, provides a communication path between a customer's premises and an end user's premises. It provides for the use of common terminating, switching and trunking facilities, and both common subscriber plant and unshared subscriber plant (i.e., WATS access lines) of the Telephone Company. Switched Access Service provides for the ability to originate calls from an end user's premises to a customer's premises, and to terminate calls from a customer's premises to an end user's premises. Specific reference to material describing the elements of Switched Access Service are provided in 6.2.

The following provision applies to the treatment of Toll VoIP-PSTN Traffic pursuant to the FCC Part 51 Interconnection Rules and in compliance with the FCC Report and Order and Further Notice of Proposed Rulemaking in CC Docket Nos. 96-45 and 01-92; GN Docket No. 09-51; WC Docket Nos. 03-109, 05-337, 07-135 and 10-90; and WT Docket No. 10-208, adopted October 27, 2011 and released November 18, 2011 (FCC 11-161). In the absence of an interconnection agreement between the Telephone Company and the customer specifying the treatment of Toll VoIP-PSTN Traffic, the Telephone Company will bill the customer the applicable switched access rates and charges specified in Section 13.2 following, on all jurisdictionally intrastate voice traffic identified as Toll VoIP-PSTN Traffic.

Rates and charges for Switched Access Service depend generally on its use by the customer, i.e., for MTS for WATS services. Rates and charges for Switched Access Service are set forth in 13.2 following. The application of rates for Switched Access Service is described in 6.8 following.

6.2 Rate Categories

The rate categories which apply to Switched Access Service are:

- Entrance Facility
- Tandem Switched Transport
- Direct Trunked Transport
- Multiplexing
- Local Switching
- Information Surcharge
- Toll Free Data Base Access Service Query Charge(s) (T)
- Equal Access Recovery Charge

RECEIVED

MAY 1 7 2013

STATE OF ALASKA
REGULATORY COMMISSION OF ALASKA

ACCESS SERVICES

6. Switched Access Service (Cont'd)

6.2 Rate Categories (Cont'd)

For Diagrams, see National Exchange Carriers F.C.C. Tariff No. 5, Section 6 (D)(N)

(D)

RECEIVED

MAY 17 2013

STATE OF ALASKA
REGULATORY COMMISSION OF ALASKA

ACCESS SERVICES

(D)

Reserved for Future Use

(D)

RECEIVED
MAY 29 2015
STATE OF ALASKA
REGULATORY COMMISSION OF ALASKA

ACCESS SERVICES

6. Switched Access Service (Cont'd)

6.2 Rate Categories (Cont'd)

A. Transport Categories

The Transport elements provide the transmission facilities between the interconnection point and each end office switch of the Telephone Company where the customer's traffic is switched when originating and terminating the customer's traffic. The transport rate categories include four classifications of rate elements: 1) Entrance Facility, 2) Common Transport and Tandem Switched Transport, 3) Direct Trunked Transport and 4) Multiplexing.

1. Entrance Facility

The Entrance Facility recovers a portion of the costs associated with a communications path between a customer designated premises and the serving wire center of that premises. Included as part of the Entrance Facility is a standard channel interface arrangement which defines the technical characteristics associated with the type of facilities to which the access service is to be connected at the customer designated premises and the type of signaling capability, if any.

Eight types of Entrance Facility are available: (T)

- Voice Grade 2 or 4 wire –an analog channel with an approximate bandwidth of 300 to 3000 Hz;
- High Capacity DS1 – an isochronous serial digital channel with a rate of 1.544 Mbps;
- High Capacity DS3 –an isochronous serial digital channel with a rate of 44.736 Mbps;
- Synchronous Optical Channel OC3 –a synchronous optical channel with a rate of 155.52 Mbps;
- Synchronous Optical Channel OC12 – a synchronous optical channel with a rate of 622.08 Mbps;
- ESALT 2 Mbps – an Ethernet packet based channel with a rate of 2 Mbps; (N)
- ESALT 10 Mbps – an Ethernet packet based channel with a rate of 10 Mbps; |
- ESALT 50 Mbps – an Ethernet packet based channel with a rate of 50 Mbps. (N)

(L)

(L) Text relocated to First Revised Sheet 104.1

RECEIVED
MAY 01 2015
STATE OF ALASKA
REGULATORY COMMISSION OF ALASKA

ACCESS SERVICES

6. Switched Access Service (Cont'd)

6.2 Rate Categories (Cont'd)

A. Transport Categories (Cont'd)

1. Entrance Facility (Cont'd)

The minimum period for which a High Capacity DS3 or Synchronous Optical Channel, or Ethernet Switched Access Local Transport Entrance Facility is provided is twelve months. (L) (N)

One charge applies for each Entrance Facility that is terminated at a customer designated premises. This charge specified in Section 13.2.2, following, will apply even if the customer designated premises and the serving wire center are collocated in a Telephone Company building, except as follows. (L)

The Entrance Facility charge specified in Section 13.2.2, following, will not apply when: (1) the customer designated premises and serving wire center are physically (including caged, cageless, shared and adjacent arrangements) or virtually collocated as those terms are used in 47 C.F.R. § 51.323 and (2) the customer obtains such collocation for the purpose of interconnection with the Telephone Company's network for the transmission and routing of telephone exchange service, exchange access or both, and for the purpose of providing local exchange or exchange access services to its customers.

The Telephone Company specific rate band assignment for the Entrance Facility rate element is specified in the Local Transport (LT) column in National Exchange Carriers Tariff F.C.C. No. 5, Section 17.5.1.

A customer's Local Transport may be connected to the Entrance Facility of another customer, providing the other customer submits a Letter of Authorization for this connection and assumes full responsibility for the cost of the Entrance Facility.

Entrance Facility is a two-way voice frequency transmission path composed of facilities determined by the Telephone Company. The two-way voice frequency transmission path permits the transport of calls in the originating direction (from the end user end office switch to the customer's designated premises) and in the terminating direction (from the customer's designated premises to the end office switch), but not simultaneously. The voice frequency transmission path may be comprised of any type of plant capable of the transmission of voice and associated telephone signals within the frequency bandwidth of approximately 300 to 3000 Hz. (L1)

(L) Text relocated from Second Revised Sheet 104
(L1) Text relocated to First Revised Sheet 104.2

RECEIVED
MAY 01 2015
STATE OF ALASKA
REGULATORY COMMISSION OF ALASKA

ACCESS SERVICES

6. Switched Access Service (Cont'd)

6.2 Rate Categories (Cont'd)

A. Transport Categories (Cont'd)

1. Entrance Facility (Cont'd) (L)

Entrance Facility provides that portion of the telephone company frequency transmission path which extends from the interconnection point to the IC's first point of switching and includes both the physical outside plant facilities and necessary transmission equipment inside and outside of the central office (voice grade transmission facilities/interface and conditioning arrangements).

The Entrance Facility rate will apply to each switched access service at the interexchange carriers' serving wire center and will also apply if the IC serving wire center and the end user wire center are collocated. The Entrance Facility rate is applied on a per trunk or circuit path for all switched access feature groups. (L)

The customer must specify the choice of facilities (i.e., Voice Grade 2 or 4 wire, High Capacity DS1 or DS3, Synchronous Optical Channel OC3 or OC12, or ESALT 2 Mbps, 10 Mbps or 50 Mbps) to be used in the provision of the Direct Trunked Transport or Entrance Facility. High Capacity DS3, Synchronous Optical Channel and ESALT facilities are only available at wire centers identified in National Exchange Carrier Association, Inc. Tariff F.C.C. No. 4, Wire Center Information. (N)

Except when ordering ESALT, the customer must specify when ordering: 1) whether the service is to be directly routed to an end office switch or through an access tandem switch, 2) the type of Direct Trunked Transport when service is directly routed to an end office, 3) the type of Entrance Facility, where applicable, 4) the directionality of the service, and 5) when multiplexing is required, the hubs(s) at which the multiplexing will be provided.

When ordering ESALT, the customer must specify: 1) the ESALT-equipped SWC and 2) the end office switch(es) to which the customer wants to terminate interexchange voice traffic originated on its IP based network and/or receive interexchange voice traffic originated on the Telephone Company's network. (N)

(L1)

(L) Text relocated from Original Sheet 104.1

(L1) Text relocated to First Revised Sheet 104.3

RECEIVED
JUN 21 2021
STATE OF ALASKA
REGULATORY COMMISSION OF ALASKA

ACCESS SERVICES

6. Switched Access Service (Cont'd)

6.2 Rate Categories (Cont'd)

A. Transport Categories (Cont'd)

2. Common Transport and Tandem Switched Transport

Common Transport and Tandem Switched Transport provides for the frequency transmission path(s) from the IC's first point of switching to the telephone company end office(s) *which may be a Remote Switching Center*, and *may* include the access tandem switch, the physical outside plant facilities and necessary transmission equipment including those found in intermediate offices.

a. Common Transport

Common Transport rate applies to the transport of Non-Toll Free calls in the originating direction. (T)

The Common Transport rate will not apply if the IC's first point of switching and the end user serving wire center are collocated. Common Transport is assessed on a per access minute basis for all switched access feature groups.

Common Transport is a two-way voice frequency transmission path composed of facilities determined by the Telephone Company. The two-way voice frequency transmission path permits the transport of calls in the originating direction (from the end user end office switch, which may be a Remote Switching Center, to the customer's designated premises) and in the terminating direction (from the customer's designated premises to the end office switch, which may be a Remote Switching Center), but not simultaneously. The voice frequency transmission path may be comprised of any type of plant capable of the transmission of voice and associated telephone signals within the frequency bandwidth of approximately 300 to 3000 Hz.

RECEIVED
JUN 21 2021
STATE OF ALASKA
REGULATORY COMMISSION OF ALASKA

ACCESS SERVICES

6. Switched Access Service (Cont'd)

6.2 Rate Categories (Cont'd)

A. Transport Categories (Cont'd)

2. Common Transport and Tandem Switched Transport (Cont'd)

b. Tandem Switched Transport

The Tandem Switched Transport rates apply to the transport of calls in the terminating direction, per 47 CFR 51.903(j), and the transport of Toll Free calls in the originating direction, per 47 CFR 51.909(m)(4). (C)

Terminating Tandem Switched Transport rates consist of a Tandem Switching rate, a Tandem Switched Facility rate, and a Tandem Switched Termination rate. (T)

1) The Tandem Switching rate recovers a portion of the costs of switching traffic through an access tandem. The Tandem Switching rate specified in 13.2, following, is applied on a per access minute per tandem basis for all terminating minutes of use switched at the tandem. Tandem locations are identified in National Exchange Carrier Association, Inc. Tariff No. 4, Wire Center Information. (T)

2) The Tandem Switched Facility rate recovers a portion of the costs of transmission facilities, including intermediate transmission circuit equipment, between the end points of interoffice circuits. The Tandem Switched Facility rate specified in 13.2, following, is applied on a per access minute per mile basis for terminating minutes of use routed over the facility.

3) The Tandem Switched Termination rate recovers a portion of the costs of circuit equipment necessary for the termination of each end of each measured segment of the Tandem Switched Facility. The Tandem Switched Termination rate specified in 13.2, following, is applied on a per access minute basis (for terminating minutes of use routed over the facility) at each end of each measured segment of Tandem Switched Facility (e.g., at the end office, Feature Group A dial tone office, host office and the access tandem). When the Tandem Switched Facility mileage is zero, neither the Tandem Switched Facility rate nor the Tandem Switched Termination rate will apply. (T)

Originating Toll Free Joint Tandem Switched Transport access rate consists of a rate applied to Toll Free originating calls on a per minute per tandem basis, in lieu of the Tandem Switching, Tandem Switched Facility and Tandem Switched Termination rates and is only billed by the tandem company that performs the tandem switching function. (N)

RECEIVED
MAY 01 2015
STATE OF ALASKA
REGULATORY COMMISSION OF ALASKA

ACCESS SERVICES

6. Switched Access Service (Cont'd)

6.2 Rate Categories (Cont'd)

A. Transport Categories (Cont'd)

3. Direct Trunked Transport

The Direct Trunked Transport rate elements recover a portion of the cost associated with a communications path or circuits dedicated to the use of a single customer between:

- the serving wire center and an end office,
- the serving wire center and a tandem,
- the serving wire center and a hub,
- a hub and an end office,
- the serving wire center and an ADM equipped wire center where add/drop multiplexing functions are performed,
- an ADM equipped wire center and an end office.

Except as specified above for High Capacity DS3, Synchronous Optical Channel and Ethernet Switched Access Local Transport, Direct Trunked Transport is available at all tandems and to all end offices except those end offices identified in National Exchange Carrier Association, Inc. Tariff F.C.C. NO. 4, Wire Center Information as not having the capability to provide Direct Trunked Transport. (N) (N)

Direct Trunked Transport is not available:from (1) end offices that provide equal access through a Centralized Equal Access arrangement, or (2) from end offices that lack recording or measurement capability

Normally, Direct Trunked Transport of originating 800 series calls from an end office is available only from Service Switching Point (SSP) equipped end offices. However, certain SSP equipped end offices cannot accommodate the direct trunking of the 800 series (other than the 800 service access code) service access code. These end offices are identified in National Exchange Carrier Association, Inc., Tariff F.C.C. NO. 4. Additionally, certain non-SSP equipped end offices can accommodate direct trunking of originating 800 series calls. These end offices are also identified in National Exchange Carrier Association, Inc., Tariff F.C.C. NO. 4.

The minimum period for which High Capacity DS3, Synchronous Optical Channel, or Ethernet Switched Access Local Transport Direct Trunked Transport is provided is twelve months. (N) | (N)

RECEIVED
MAY 01 2015
STATE OF ALASKA
REGULATORY COMMISSION OF ALASKA

ACCESS SERVICES

6. Switched Access Service (Cont'd)

6.2 Rate Categories (Cont'd)

A. Transport Categories (Cont'd)

3. Direct Trunked Transport (Cont'd)

Eight types of Direct Trunked Transport are available: (T)

- Voice Grade 2 or 4 wire – an analog channel with an approximate bandwidth of 300 to 3000 Hz;
- High Capacity DS1 – an isochronous serial digital channel with a rate of 1.544 Mbps;
- High Capacity DS3 – an isochronous serial digital channel with a rate of 44.736 Mbps;
- Synchronous Optical Channel OC3 – a synchronous optical channel with a rate of 155.52 Mbps;
- Synchronous Optical Channel OC12 – a synchronous optical channel with a rate of 622.08 Mbps.
- ESALT 2 Mbps – an Ethernet packet based channel with a rate of 2 Mbps; (N)
- ESALT 10 Mbps – an Ethernet packet based channel with a rate of 10 Mbps; |
- ESALT 50 Mbps – an Ethernet packet based channel with a rate of 50 Mbps. (N)

High Capacity DS3 Direct Trunked Transport cannot be terminated at end offices that are not identified as hub offices that provide DS3 to DS1 multiplexing.

Synchronous Optical Channel Service OC3 or OC12 Direct Trunked Transport cannot be terminated at end offices that are not identified as ADM equipped wire centers that provide OC3 to DS1 or OC12 to OC3 Add/Drop Multiplexing.

(L)

(L) Text relocated to First Revised Sheet 105.2

RECEIVED
MAY 29 2015
STATE OF ALASKA
REGULATORY COMMISSION OF ALASKA

ACCESS SERVICES

6. Switched Access Service (Cont'd)

6.2 Rate Categories (Cont'd)

A. Transport Categories (Cont'd)

3. Direct Trunked Transport (Cont'd)

ESALT 2 Mbps, 10 Mbps or 50 Mbps Direct Trunked Transport cannot be terminated at end offices, host offices or tandem offices that are not identified as ESALT-equipped wire centers in National Exchange Carrier Association, Inc. Tariff F.C.C. No. 4, Wire Center Information. (N) (N)

Additionally, DS1 Direct Trunked Transport cannot be terminated at end offices that are not identified as hub offices that provide DS1 to Voice Grade multiplexing or are not electronic end offices. (L)

Offices that provide multiplexing and add/drop multiplexing functions are identified in National Exchange Carrier Association, Inc. Tariff F.C.C. No. 4, Wire Center Information. (L)

Except as specified below for ESALT, Direct Trunked Transport rates consist of a Direct Trunked Facility rate specified in Section 13, following, which is applied on a per mile basis and a Direct Trunked Termination rate which is applied at each end of each measured segment of the Direct Trunked Facility (e.g., at the end office, tandem, hub, ADM equipped wire center, and serving wire center). When the Direct Trunked Facility mileage is zero, neither the Direct Trunked Facility rate nor the Direct Trunked Termination rate will apply. (T)

The Direct Trunked Facility rate recovers a portion of the costs of transmission facilities, including intermediate transmission circuit equipment, between the end points of the interoffice circuits.

The Direct Trunked Termination rate specified in Section 13, following, recovers a portion of the costs of the circuit equipment that is necessary for the termination of each end of the Direct Trunked Facility. The Telephone Company specific rate band assignment for the Direct Trunked transport rate elements is specified in the Local Transport (LT) column in the National Exchange Carrier Association Tariff, F.C.C. No. 5 Section 17.5.1, following.

The minimum period for which High Capacity DS3 or Synchronous Optical Channel Direct Trunked Transport is provided is twelve months.

(L) Text Relocated from First Revised Sheet No. 105.1

RECEIVED
MAY 29 2015
STATE OF ALASKA
REGULATORY COMMISSION OF ALASKA

ACCESS SERVICES

6. Switched Access Service (Cont'd)

6.2 Rate Categories (Cont'd)

A. Transport Categories (Cont'd)

3. Direct Trunked Transport (Cont'd) (L)

Direct Trunked Transport rates for ESALT consist of: 1) an ESALT Direct Trunked Facility (DTF) rate specified in Section 14, following, which is applied on a per facility basis based on the capacity ordered by the customer (i.e., 2 Mbps, 10 Mbps or 50 Mbps)and on whether the ESALT DTF is provided entirely within the Telephone Company's operating territory or jointly provided with another telephone company to a serving wire center located outside of the Telephone Company's operating territory and 2) an ESALT Direct Trunked Termination (DTT) rate specified in Section 14, following, which is applied at each end of the ESALT DTF (i.e., at the serving wire center serving the customer's designated premises and either the end office, host office, or tandem office) at the same capacity as the capacity of the associated ESALT Direct Trunked Facility segment. (N)

The type of ESALT Direct Trunked Facility required will depend on the configuration of the customer's service as follows:

- ESALT DET-E1 is required when the ESALT SWC and SWC serving the customer designated premises are located within the Telephone Company's operating territory.

- ESALT DTF-E2 is required when the customer designated premises is located outside of the Telephone Company's operating territory in an adjacent operating territory and the ESALT is jointly provided with another telephone company.

- ESALT DTF-E3 is required when the customer designated premises is located outside of the Telephone Company's operating territory in a non-adjacent operating territory where the airline distance between the ESALT SWC and SWC serving the customer designated premises is 50 airline miles or less and the ESALT is jointly provided with another telephone company.

(N)
(L)
(L1)

(L) Text Relocated to First Revised Sheet 105.4
(L1) Text Relocated to First Revised Sheet 105.5

RECEIVED
MAY 29 2015
STATE OF ALASKA
REGULATORY COMMISSION OF ALASKA

ACCESS SERVICES

6. Switched Access Service (Cont'd)

6.2 Rate Categories (Cont'd)

A. Transport Categories (Cont'd)

3. Direct Trunked Transport (Cont'd) (N)

- ESALT DTF-E4 is required when the customer designated premises is located outside of the Telephone Company's operating territory in a non-adjacent operating territory where the airline distance between the ESALT SWC and SWC serving the customer designated premises is between 51 and 75 airline miles and the ESALT is jointly provided with another telephone company. When the customer designated premises is located in a non-adjacent operating territory, ESALT is not available when the airline distance between the SWC serving the customer designated premises and the ESALT SWC is greater than 75 airline miles. (N)

4. Multiplexing

Multiplexing provides an arrangement for converting a single, higher capacity or bandwidth circuit to several lower capacity or bandwidth circuits. When a derived channel is itself multiplexed to derive additional channels with a lesser capacity, this is referred to as cascade multiplexing. When cascade multiplexing occurs, a charge for the additional multiplexing function applies. When cascade multiplexing is performed at different hubbing locations, Direct Trunked Transport charges also apply between the hubs. Multiplexing is only available at wire centers identified in the National Exchange Carrier Association, Inc. Tariff No. 4 Wire Center Information. The following multiplexing arrangements are offered for use with Switched Access Service. (L)

a) DS3 to DS1 Multiplexing charges specified in Section 13, following, apply when a High Capacity DS3 Entrance Facility or High Capacity DS3 Direct Trunked Transport is connected with High Capacity DS1 Direct Trunked Transport. The Telephone Company specific rate band assignment for the DS3 to DS1 Multiplexing rate element is specified in the Local Transport (LT) column in the National Exchange Carrier Association, Inc. Tariff No. 5, Section 17.5.1. The DS3 to DS1 multiplexer will convert a 44.736 Mbps channel to 28 DS1 channels using digital time division multiplexing (L)

(L1)

(L) Text Relocated from Original Sheet No. 105.3 (L2)
(L1) Text Relocated to First Revised Sheet No. 105.5
(L2) Text Relocated to Original Sheet No. 105.6

RECEIVED
MAY 29 2015
STATE OF ALASKA
REGULATORY COMMISSION OF ALASKA

ACCESS SERVICES

6. Switched Access Service (Cont'd)

6.2 Rate Categories (Cont'd)

A. Transport Categories (Cont'd)

4. Multiplexing (Cont'd)

a) DS1 to Voice Grade Multiplexing charges specified in Section 13, following, apply when a High Capacity DS1 Entrance Facility or High Capacity DS1 Direct Trunked Transport is connected with Voice Grade Direct Trunked Transport. However, a DS1 to Voice Grade Multiplexing Charge does not apply when a High Capacity DS1 Entrance Facility or High Capacity DS1 Direct Trunked Transport is terminated at an electronic end office and only Switched Access Service is provided over the DS1 facility (i.e., Voice Grade Special Access channels are not derived). The Telephone Company specific rate band assignment for the DS1 to Voice Grade Multiplexing rate element is specified in the Local Transport (LT) column in the National Exchange Carrier Association, Inc. Tariff No. 5, Section 17.5.1. The DS1 to Voice Grade multiplexer will convert a 1.544 Mbps channel to 24 Voice Grade channels. (L) (L)

5. Add/Drop Multiplexing (L1)

Add/Drop Multiplexing provides a type of multiplexing function in connection with Synchronous Optical Channel Service that allows lower level signals to be added or dropped from a high speed optical carrier channel within a Telephone Company wire center.

The Add/Drop Multiplexing Central Office Port charge specified in Section 13, following, applies to the interface provided at a Telephone Company wire center for the purpose of adding or dropping lower capacity services from Synchronous Optical Channel Entrance Facilities or Direct Trunked Transport. (L1) (L2)

(L) Text relocated from Original Sheet No. 105.3
(L1) Text relocated from Original Sheet No. 105.4
(L2) Text relocated to Original Sheet No. 105.7

RECEIVED
MAY 29 2015
STATE OF ALASKA
REGULATORY COMMISSION OF ALASKA

6. Switched Access Service (Cont'd)

6.2 Rate Categories (Cont'd)

A. Transport Categories (Cont'd) (L)

5. Add/Drop Multiplexing (Cont'd)

Central Office Ports are available at the following speeds:

Central Office Port	Speed
OC3	155.52 Mbps
DS3	44.736 Mbps
DS1	1.544 Mbps

OC12 service may only be multiplexed to OC3 channels.

When an OC3 channel is derived from an OC12 service and is further multiplexed to obtain DS3 service, a DS3 port charge will apply in addition to the OC3 port charge.

When a DS3 channel is derived from an OC3 service and is further multiplexed to obtain DS1 service, a DS3 to DS1 Multiplexing charge will apply in addition
to the DS3 port charge.

When a DS1 channel is directly derived from an OC3 service, a DS1 port charge will apply.

When a DS1 channel is further multiplexed to a lower level signal, a DS1 to Voice Grade Multiplexing charge will also apply.

Add/Drop Multiplexing is only available at wire centers identified in National Exchange Carrier Association, Inc. Tariff F.C.C. No. 4 Wire Center Information. (L)

(L) Text relocated from Original Sheet 105.4

RECEIVED
JUN 21 2021
STATE OF ALASKA
REGULATORY COMMISSION OF ALASKA

ACCESS SERVICES

6. Switched Access Service (Cont'd)

6.2 Rate Categories (Cont'd)

A. Transport Categories (Cont'd)

6. WATS

When a WATS Access Line is provided to an end user served by an end office that does not perform WATS/Toll Free switching functions, Special Access rates and surcharges as set forth in Section 7, will apply for the facilities necessary to extend the WATS Access Line to the interconnection point with the WATS Serving Office of interexchange carrier. The voice frequency transmission path may be comprised of any type of plant capable of the transmission of voice and associated telephone signals within the frequency bandwidth of approximately 300 to 3000 Hz. The Telephone Company will work cooperatively with the customer to develop routing and other transport arrangements. (T)

RECEIVED

MAY 1 7 2013

STATE OF ALASKA
REGULATORY COMMISSION OF ALASKA

ACCESS SERVICES

6. Switched Access Service (Cont'd)

6.2 Rate Categories (Cont'd)

A. Transport Categories (Cont'd)

7. Interface Groups

Ten Interface Groups are provided for terminating Entrance Facility at the customer's designated premises. Each Interface Group provides a specified premises interface (e.g., two-wire, four-wire, DS1, etc.). Where transmission facilities permit, the individual transmission path between the customer's designated premises and the first point of switching may at the option of the customer be provided with optional features as set forth in (2) following. Interface groups 1 and 2 described in 11.1 and the optional features described in (2) following are nonchargeable features. No additional charges other than the rates for Transport set forth in 13.2.2 apply. Additional charges may apply for Interface Groups 3 through 10. (C) (C)

As a result of the customer's access order and the type of Telephone Company transport facilities serving the customer's premises, the need for signaling conversions or two-wire to four-wire conversions, or the need to terminate digital or high frequency facilities in channel bank equipment may require that Telephone Company equipment be placed at the customer's designated premises. For example, if a voice frequency interface is ordered by the customer and the Telephone Company facilities serving the customer's designated premises are digital, then Telephone Company channel bank equipment must be placed at the customer's designated premises in order to provide the voice frequency interface ordered by the customer. Technical specifications concerning the available interface groups are set forth in 11.1 following.

RECEIVED
December 6, 2024
STATE OF ALASKA
REGULATORY COMMISSION OF ALASKA

ACCESS SERVICES

6. Switched Access Service (Cont'd)

6.2 Rate Categories (Cont'd)

A. Transport Categories (Cont'd)

8. Chargeable Optional Features

Toll Free Data Base Access Service is provided to all customers in conjunction with FGC and FGD switched access service. A Basic or Vertical Feature Query charge, as set forth in 13.2.2 (H) following, is assessed for each query launched to the Toll Free database. The Basic Query provides the identification of the customer to whom the call will be delivered. The Vertical Feature Query provides this same customer identification function in addition to vertical features which may include: (1) call validation (ensuring that calls originate from subscribed service areas); (2) POTS translation of 800 series numbers (which is generally necessary for the routing of 800 series calls); (3) alternate POTS translation (which allows subscribers to vary the routing of 800 series calls based on factors such as time of day, place of origination of the call, etc.); and (4) multiple carrier routing (which allows subscribers to route to different carriers based on factors similar to those in (3)). (T)

The ESALT Real Time Class of Service/Quality of Service (RT Cos/QoS) option, when ordered for use with ESALT Direct Trunked Facility provided entirely within the Telephone Company's operating territory, provides service performance commitments on transmissions using the Telephone Company's Ethernet local transport network. ESALT RT CoS/QoS is provided as set forth in Section 6.9.3(C), following.

The ESALT Entrance Facility Protection (ESALT EFP) option, when ordered for use with ESALT Entrance Facility, provides backup protection using the Telephone Company's Ethernet local transport network. ESALT EFP is provided as set forth in Section 6.9.3(D), following.

RECEIVED
NOV 21 1990
State of Alaska
Public Utilities Commission

ACCESS SERVICES

6. Switched Access Service (Cont'd)

6.2 Rate Categories (Cont'd)

(B) End Office

The End Office rate category establishes the charges related to the local end office switching and end user termination functions necessary to complete the transmission of Switched Access communications to and from the end users served by the local end office. The End Office rate category includes the Local Switching and Information Surcharge rate elements.

(1) Local Switching

The Local Switching rate element establishes the charges related to the use of end office switching equipment, the terminations in the end office of end user lines, and the terminations of calls at Telephone Company Intercept Operators or recordings.

Local Switching rates are assessed to a customer on the total number of access minutes. Rates for Local Switching are set forth in 13.2.2 following.

Pursuant to Orders No. 6 & 7 in Docket U-90-26

RECEIVED
NOV 21 1990
State of Alaska
Public Utilities Commission

ACCESS SERVICES

6. Switched Access Service (Cont'd)

6.2 Rate Categories (Cont'd)

(B) End Office (Cont'd)

(1) Local Switching (Cont'd)

There are three types of functions included in the local Switching rate element: Common Switching, Line Termination, and Intercept. These are described in (a) through (c) following.

(a) Common Switching

Common Switching provides the local end office switching functions associated with access. The Common Switching arrangements provided for the various Feature Group arrangements are described in 6.3 following.

(b) Line Termination

Line termination provides for the termination of end user lines in the local end office. There are two type of Line Terminations, i.e., Common Line Terminations and Special Access Service Terminations utilized in the provision of WATS or WATS-type service.

(c) Intercept

The Intercept function provides for the termination of a call at a Telephone Company Intercept operator or recording. The operator or recording tells a caller why a call, as dialed, could not be completed, and if possible, provides the correct number.

(2) Information Surcharge

Information Surcharge rates are assessed to a customer based on the total number of access minutes. Information Surcharge rates are as set forth in 13.2.2 following.

Pursuant to Orders No. 6 & 7 in Docket U-90-26

RECEIVED
JUN 21 2021
STATE OF ALASKA
REGULATORY COMMISSION OF ALASKA

ACCESS SERVICES

6. Switched Access Service (Cont'd)

6.2 Rate Categories (Cont'd)

B. End Office (Cont'd)

2. Information Surcharge (Cont'd)

The number of end office switching transmission paths will be determined as set forth in 6.6.5 following.

C. Equal Access Recovery Charge

An Equal Access Recovery Charge (EARC) is assessed for the provision of Feature Group D switched access services at locations where equal access is available. The EARC is further described in Section 6.8.1(C)(2).

D. Toll Free Data Base Access Service (T)

Toll Free Data Base Access Service is provided to all customers in conjunction with FGC and FGD switched access service. When a 1+800 series+NXX-XXXX call is originated by an end user, the Telephone Company will utilize the Signaling System 7 (SS7) network to query a Toll Free data base to identify the customer to whom the call will be delivered and provide vertical features based on the dialed ten digits. The call will then be routed to the identified customer over FGC or FGD switched (T) access. The 800 series includes the following service access codes: 800, 888, 877, 866, 855, 844, 833 and 822. (N)

RECEIVED
December 6, 2024
STATE OF ALASKA
REGULATORY COMMISSION OF ALASKA

ACCESS SERVICES

6. Switched Access Service (Cont'd)

6.2 Rate Categories (Cont'd)

D. Toll Free Data Base Access Service (Cont'd)

A Basic or Vertical Feature Query charge, as set forth in 13.2.2(H) following, is assessed for each query launched to the data base which identifies the customer to whom the call will be delivered. The Basic Query provides the identification of the customer to whom the call will be delivered. The Vertical Feature Query provides this same customer identification function in addition to vertical features which may include: (1) call validation (ensuring that calls originate from subscribed service areas); (2) POTS translation of 800 series numbers; (3) alternate POTS translation (which allows subscribers to vary the routing of 800 series calls based on factors such as time of day, place or origination of the call, etc.); and (4) multiple carrier routing (which allows subscribers to route to different carriers based on factors similar to those in (3)). (T)

The description and application of this charge with respect to Feature Group C or Feature Group D is as set forth in 6.3.3(C) and 6.3.5(C) following.

RECEIVED
December 6, 2024
STATE OF ALASKA
REGULATORY COMMISSION OF ALASKA

ACCESS SERVICES

6. Switched Access Service (Cont'd)

6.2 Rate Categories (Cont'd)

E. Interim NXX Translation

The Interim NXX Translation rate element provides for customer identification of non-data base services when calls are directed by end users in the 1+SAC+NXX-XXXX (e.g., 1+900+NXX-XXXX) format. The NXX codes are assigned to specific customers in conformance with the North American Numbering Plan (NANP). NXX code assignment(s) will be made by the NANP Coordinator. The Telephone Company will use the NXX code to identify the customer to whose point of termination the traffic is to be delivered, (i.e., at appropriately equipped electronic end offices, access tandems or through contracted arrangements with other parties.) It is then the responsibility of the customer to do any further translation the customer deems necessary to route the call. Customer assigned NXX codes which have not been ordered will be blocked.

A nonrecurring charge, as set forth in 13.2.l(G) following, is associated with this optional feature. This nonrecurring charge is assessed by the Telephone Company on a per order basis and is applied in lieu of the Access Order Charge specified in 13.2.l(A) following. The nonrecurring charge is assessed only by the Telephone Company that provides the final translation function. A Telephone Company is said to have provided the final Interim NXX Translation when its translation identifies the customer's traffic and this traffic is then delivered to the customer's point of termination without any further translation. The description and application of this charge with respect to Feature Group C and Feature Group D is as set forth in 6.3.3(C)(l) and 6.3.5(C)(l) following. (T)

RECEIVED

MAY 01 2015

STATE OF ALASKA
REGULATORY COMMISSION OF ALASKA

ACCESS SERVICES

6. Switched Access Service (Cont'd)

6.3 Provision and Description of Switched Access Service Feature Groups

Switched Access Service is provided in four Feature Group arrangements.

The Transport and End Office rate categories described in 6.2 preceding apply to all Switched Access Service.

Where suitable facilities exist, the Ethernet Switched Access Local Transport (ESALT) option enables the customer to handoff IP formatted traffic to the Telephone Company at the designated end office, host office or tandem office location where the Telephone Company will convert the customer's traffic to TDM format for termination to local exchange service end users over the Telephone Company's local network. This option also enables the Telephone Company to convert traffic originated from its local exchange service end users from TDM format to IP format at the designated end office, host office or tandem office and handoff that IP formatted traffic to the customer designated premises. (N)

There are three specific transmission specifications (i.e., Types A, B and C) that have been identified for the provision of Feature Groups. Except as specified below for ESALT, the technical specifications for the Entrance Facility and Direct Trunked Transport are the same as those set forth in Section 7, following for Voice Grade, High Capacity and Synchronous Optical Channel Services.

The technical specifications for the ESALT Entrance Facility and Direct Trunked Transport are as set forth in the Technical References listed below. The transmission quality of ESALT is not guaranteed and is offered to customers at a best effort level.

- IEEE Standard 802.3 – 2008;
- IETF RFC 3261 – June 2002;
- IETF RFC 3262 - June 2002;
- IETF RFC 3263 – June 2002;
- IETF RFC 3264 – June 2002;
- IETF RFC 3265 – June 2002;
- IETF RFC 3550 – July 2003;
- ITU-T G.711 – November 1988;
- ITU-T G.723.1 – May 2006;
- ITU-T G.729 – January 2007;
- ITU-T G.7041/Y.1303 – August 2005;
- ITU-T G.8040/Y.1340 – September 2005;
- ITU-T H.225.0 – May 2006;
- ITU-T H.245 – June 2008; and/or (N)
- ITU-T H.323 – June 2006. (L)

(L) Text Relocated to Second Revised Sheet No. 111

RECEIVED
MAY 01 2015
STATE OF ALASKA
REGULATORY COMMISSION OF ALASKA

ACCESS SERVICES

6. Switched Access Service (Cont'd)

6.3 Provision and Description of Switched Access Service Feature Groups (Cont'd)

The specifications provided are dependent on the Interface Group and the routing of the service, i.e., whether the service is routed directly to the end office or via an access tandem. The parameters for the transmission specifications are set forth in Section 11.1.2, following. (L) (N)

Feature Groups are arranged for either originating, terminating or two-way calling, based on the customer end office switching capacity ordered. Originating calling permits the delivery of calls from Telephone Exchange Service locations to the customer designated premises. Terminating calling permits the delivery of calls from the customer designated premises to Telephone Exchange Service locations. Two-way calling permits the delivery of calls in both directions, but not simultaneously. The Telephone Company will determine the type of calling to be provided unless the customer requests that a different type of directional calling is to be provided. In such cases, the Telephone Company will work cooperatively with the customer to determine the directionality.

There are various optional features associated with Local Transport, Common Switching and Transport Termination available with the Feature Groups. In addition, the Interim NXX Translation and Operator Transfer Service optional features are available with Feature Group C and Feature Group D.

Operator Transfer Services will be provided over FGC or FGD switched access service trunks from the operator service location to the customer's premises. Where required by technical limitations, a separate FGC or FGD trunk group will be established for Operator Transfer Service. The operator service location will provide trunk answer and disconnect supervisory signaling to the customer.

Detailed descriptions of each of the available Feature Groups are set forth in Sections 6.3.1 through 6.3.5, following. Each Feature Group is described in terms of its specific physical characteristics and calling capabilities, the optional features available for use with it and the standard testing capabilities.

The Common Switching and Transport Termination optional features, which are described in Section 6.9, following, unless specifically stated otherwise, are available at all Telephone Company end office switches. (N)

(L) Text Relocated to Second Revised Sheet No. 111

RECEIVED
MAY 01 2015
STATE OF ALASKA
REGULATORY COMMISSION OF ALASKA

ACCESS SERVICES

6. Switched Access Service (Cont'd)

6.3 Provision and Description of Switched Access Service Feature Groups (Cont'd)

6.3.1 Feature Group A (FGA)

A. Description (L)

1. FGA Switching is provided at all end office switches. At the option of the customer, FGA is provided on a single or multiple line group basis and is arranged for originating calling only, terminating calling only, or two-way calling which are specified by the customer's order for service.

2. FGA provides a line side termination at the first point of switching (dial tone office). The line side termination will be provided with either ground start supervisory signaling or loop start supervisory signaling. The type of signaling is at the option of the customer.

3. Selection of the first point of switching at which the line side termination is to be provided subject to Section 2.6, Access Network Change Notification (L)

4. A seven digit telephone number assigned by the Telephone Company is provided for access to FGA switching in the originating direction. The seven digit local telephone number will be associated with the selected end office switch and is of the form NXX-XXXX. (L1)

   If the customer requests a specific seven digit telephone number that is not currently assigned, and the Telephone Company can, with reasonable effort, comply with the request, the requested number will be assigned to the customer.

5. FGA switching, when used in the terminating direction, is arranged with dial tone start-dial signaling. When used in the terminating direction, FGA switching may, at the option of the customer, be arranged for dial pulse or dual tone multifrequency address signaling, subject to availability of equipment at the first point of switching. When FGA switching is provided in a hunt group or uniform call distribution arrangement, all FGA switching will be arranged for the same type of address signaling.

6. No address signaling is provided by the Telephone Company when FGA switching is used in the originating direction. Address signaling in such cases, if required by the customer, must be provided by the customer's end user using in-band tone address signaling techniques. Such in-band tone address signals will not be regenerated by the Telephone Company and will be subject to the ordinary transmission capabilities of the Transport provided. (L1) (L2)

(L) Text Relocated from First Revised Sheet No. 109.3, (L1) Text Relocated from First Revised Sheet No. 110, (L2) Text Relocated to First Revised Sheet No. 111.1

RECEIVED
MAY 01 2015
STATE OF ALASKA
REGULATORY COMMISSION OF ALASKA

ACCESS SERVICES

6. Switched Access Service (Cont'd)

6.3 Provision and Description of Switched Access Service Feature Groups (Cont'd)

6.3.1 Feature Group A (FGA) Cont'd)

A. Description Cont'd)

7. FGA, when being used in the terminating direction, may be used to access valid NXX's in the local exchange area. For FGA the local exchange area is defined as the local calling area of the end office switch from which the FGA is provided. The description of any specific FGA is provided. The description of any specific FGA Area will be provided to the customer upon request. (L)

Access is also provided to local operator service (0- and 0+), directory assistance (411 and 555-1212), emergency reporting service (911), information services (e.g., time and temperature), and IC services (by dialing the appropriate digits). The customer will be billed for an operator surcharge as set forth in local or other tariffs, for local operator assistance (0-) calls; directory assistance (411 and 555-1212) calls; and customer call charges in accordance with other IC tariffs in force when the Telephone Company performs the billing for such customer calls. FGA used for calls outside the FGA Access Area, will be charged under applicable local and toll tariffs.

8. When a FGA switching arrangement for an individual customer (a single line or entire hunt group) is discontinued at an end office, an intercept announcement is provided. (L)

This arrangement provides, for a limited period of time, an announcement that the service associated with the number dialed has been disconnected.

9. Testing Capabilities

FGA is provided, in the terminating direction where equipment is available, with seven digit access to balance (100 type) test line and milliwatt (102 type) test line. In addition to the tests which are included with the installation of service (Acceptance Testing) and as ongoing routine testing, Additional Cooperative Acceptance Testing and Additional Manual Testing are available as set forth in 9.3.1 following.

10. FGA service may not be used in conjunction with ESALT. (N)

(L) Text Relocated from First Revised Sheet No. 111 (L1)

(L1) Text Relocated to First Revised Sheet No. 111.2

RECEIVED
MAY 29 2015
STATE OF ALASKA
REGULATORY COMMISSION OF ALASKA

ACCESS SERVICES

6. Switched Access Service (Cont'd)

6.3 Provision and Description of Switched Access Service Feature Groups (Cont'd)

6.3.1. Feature Group A (FGA) (Cont'd)

B. Optional Features (D) (L)

The following features are available in lieu of, or in addition to, the standard features provided with Feature Group A:

1. Common Switching Nonchargeable Optional Features

   a. Call Denial on Line or Hunt Group

   b. Service Code Denial on Line or Hunt Group

   c. Hunt Group Arrangement

   d. Uniform Call Distribution Arrangement (L)

   e. Nonhunting Number for Use with Hunt Group or Uniform Call Distribution Arrangement

   f. Band Advance Arrangement for Use with Special Access Service Utilized in the Provision of WATS-Type Services

   g. Hunt Group Arrangement for Use with Special Access Service Utilized in the Provision of WATS-Type Services

   h. Uniform Call Distribution Arrangement for Use with Special Access Service Utilized in the Provision of WATS-Type Services

   i. Nonhunting Number Associated with a Hunt Group Arrangement or Uniform Call Distribution Arrangement for Use with Special Access Service Utilized in the Provision of WATS-Type Services

2. Transport Nonchargeable Optional Features

   a. Customer Specification of local transport termination

      1. Two-way operation with dial pulse address signaling and loop start supervisory signaling

(L) Text Relocated from Original Sheet No. 111.1

RECEIVED
JUL 23 1991
State of Alaska
Public Utilities Commission

ACCESS SERVICES

6. Switched Access Service (Cont'd)

6.3 Provision and Description of Switched Access Service Feature Groups (Cont'd)

6.3.1 Feature Group A (FGA) (Cont'd)

B. Optional Features (Cont'd) (N)

2. Transport Nonchargeable Optional Features (Cont'd)

a. Customer Specification of local transport termination (Cont'd)

2. Two-way operation with dial pulse address signaling and ground start supervisory signaling

3. Two-way operation with dial tone multi-frequency address signaling and loop start supervisory signaling

4. Two-way operation with dial tone multi-frequency address signaling and ground start supervisory signaling

5. Terminating operation with dial pulse address signaling and loop start supervisory signaling

6. Terminating operation with dial pulse address signaling and ground start supervisory signaling

7. Terminating operation with dual tone multifrequency address signaling and loop start supervisory signaling

8. Terminating operation with dual tone multifrequency address signaling and ground start supervisory signaling (N)

"Pursuant to Letter Order Dated 5/21/91"

RECEIVED
JUL 23 1991
State of Alaska
Public Utilities Commission

ACCESS SERVICES

6. Switched Access Service (Cont'd)

6.3 Provision and Description of Switched Access Service Feature Groups (Cont'd)

6.3.1 Feature Group A (FGA) (Cont'd)

B. Optional Features (Cont'd) (N)

2. Transport Nonchargeable Optional Features (Cont'd)

a. Customer Specification of local transport termination (Cont'd)

9. Originating operation with loop start supervisory signaling

10. Originating operation with ground start supervisory signaling

b. Supervisory Signaling

c. Customer Specified Entry Switch Receive Level, if such levels do not interfere with the Telephone Company network performance

3. Feature Availability is Based on Current Technology

4. Optional Features Provided in Local Tariffs

Certain other features which may be available in connection with Feature Group A (e.g., custom calling features) are provided under the Telephone Company's local and/or general exchange service tariffs. (N)

"Pursuant to Letter Order Dated 5/21/91"

Tariff Advice No. 4 Effective: May 21, 1991

Issued: 7/23/91
Issued By: Alaska Exchange Carriers Association, Inc.
By: [signature] Title: President

RECEIVED
NOV 21 1990
State of Alaska
Public Utilities Commission

ACCESS SERVICES

6. Switched Access Service (Cont'd)

6.3 Provision and Description of Switched Access Service Feature Groups (Cont'd)

6.3.2 Feature Group B (FGB)

(A) Description

(1) FGB, when directly routed to an end office (i.e., provided without the use of an access tandem switch), is provided at appropriately equipped Telephone Company electronic end office switches. When provided via Telephone Company designated electronic access tandem switches, FGB switching is provided at Telephone Company electronic and electromechancial end office switches.

(2) FGB is provided as trunk side switching through the use of end office or access tandem switch trunk equipment. The switch trunk equipment is provided with wink start start-pulsing signals and answer and disconnect supervisory signaling.

(3) FGB switching is provided with multifrequency address signaling in both the originating and terminating directions, when available. Except for FGB switching provided with automatic number identification (ANI) or rotary dial station signaling arrangements as set forth in 6.3.2(B) following, any other address signaling in the originating direction, if required by the customer, must be provided by the customer's end user using in-band tone address signaling techniques. Such in-band tone address signals will not be regenerated by the Telephone Company and will be subject to the ordinary transmission capabilities of the Transport provided.

Pursuant to Orders No. 6 & 7 in Docket U-90-26

RECEIVED
NOV 21 1990
State of Alaska
Public Utilities Commission

ACCESS SERVICES

6. Switched Access Service (Cont'd)

6.3 Provision and Description of Switched Access Service Feature Groups (Cont'd)

6.3.2 Feature Group B (FGB) (Cont'd)

(A) Description (Cont'd)

(4) The access code for FGB switching is a uniform access code. The form of the uniform access code is 950-1XXX or 950-0XXX for carriers. These uniform access codes will be the assigned access numbers of all FGB switched access service provided to the customer by the Telephone Company.

(5) FGB switching, when used in the terminating direction, may be used to access valid telephone numbers in the local exchange area of the terminating end office switch. The customer will also be billed additional non-access charges for calls to certain community information services for which rates are applicable when the Telephone Company performs billing for such services.

RECEIVED
MAY 01 2015
STATE OF ALASKA
REGULATORY COMMISSION OF ALASKA

ACCESS SERVICES

6. Switched Access Service (Cont'd)

6.3 Provision and Description of Switched Access Service Feature Groups (Cont'd)

6.3.2 Feature Group B (FGB) (Cont'd)

A. Description (Cont'd)

5. (Cont'd)

Additionally, non-access charges will also be billed for calls from a FGB trunk to another customer's service in accordance with that customer's applicable service rates when the Telephone Company performs the billing functions for that customer. Calls in the terminating direction will not be completed to 950-1XXX or 950-0XXX access codes, local operator assistance (0- and 0+), Directory Assistance (411 or 555-1212), service code 911 or other 950-1XXX or 950-0XXX access codes. Calls will not be completed to Directory Assistance (NPA-555-1212 or 555-1212). FGB may not be switched, in the terminating direction (i.e., from the access tandem to the end office), to FGA, B, or D Switched Access Service Feature Groups.

6. The Telephone Company will establish a trunk group or groups for the customer at end office switches or access tandem switches where FGB switching is provided. When required by technical limitations, a separate trunk group will be established for each type of FGB switching arrangement provided. Different types of FGB or other switching arrangements may be combined in a single trunk group at the option of the Telephone Company.

7. FGB Service may not be used in conjunction with ESALT. (N)

RECEIVED
NOV 21 1990
State of Alaska
Public Utilities Commission

ACCESS SERVICES

6. Switched Access Service (Cont'd)

6.3 Provision and Description of Switched Access Service Feature Groups (Cont'd)

6.3.2 Feature Group B (FGB) (Cont'd)

(B) Optional Features

(1) Common Switching Nonchargeable Optional Features

(a) Automatic Number Identification (ANI)
(b) Up to 7 Digit Outpulsing of Access Digits to Customer

(2) Transport Nonchargeable Optional Features

(a) Rotary Dial Station Signaling
(b) Customer Specification of Local Transport Termination
(c) Supervisory Signaling
(d) Customer Specified Entry Switch Receive Level, if such levels do not interfere with Telephone Company network performance.

(C) Transmission Specifications

FGB is provided with either Type B or Type C Transmission Specifications. The specifications for the associated parameters are guaranteed to the end office when routed directly or to the first point of switching when routed via an access tandem. Type C Transmission Specifications are provided with Interface Group 1 and Type B is provided with Interface Groups 2 through 10. Type DB Data Transmission Parameters are provided with FGB to the first point of switching.

Pursuant to Orders No. 6 & 7 in Docket U-90-26

RECEIVED

NOV 15 2002

State of Alaska
Regulatory Commission of Alaska

ACCESS SERVICES

6. Switched Access Service (Cont'd)

6.3 Provision and Description of Switched Access Service Feature Groups (Cont'd)

6.3.2 Feature Group B (FGB) (Cont'd)

D. Testing Capabilities

FGB is provided, in the terminating direction where equipment is available, with seven digit access to balance (100 type) test line, milliwatt (102 type) test line, nonsynchronous or synchronous test line, automatic transmission measuring (105 type) test line, data transmission (107 type) test line, loop around test line, short circuit test line and open circuit test line. Additional Automatic Testing, and Additional Manual Testing are available as set forth in 9.3.1 following.

E. Design and Traffic Routing

For Feature Group B, the trunk directionality and traffic routing of the Switched Access Service between the customer designated premises and the entry switch are determined by the customer's order for service; except that the determining of traffic routing through a centralized equal access arrangement, subject to Section 2.6, Access Network Change Notification. Those Telephone Company offices providing equal access through centralized arrangements are identified in National Exchange Carrier Association, Inc. Tariff F.C.C. No. 4. Additionally, the customer may order the optional feature Customer Specification of Transport Termination as set forth in Section 11 following. (C) (C)

(D)

RECEIVED
JUN 21 2021
STATE OF ALASKA
REGULATORY COMMISSION OF ALASKA

ACCESS SERVICES

6. Switched Access Service (Cont'd)

6.3 Provision and Description of Switched Access Service Feature Groups (Cont'd)

6.3.3 Feature Group C (FGC)

A. Description

1. FGC is provided at all Telephone Company non-equal access end office switches. It is provided to the customer (i.e., provider of MTS, Directory Assistance, Toll Free, 900 and WATS) on a direct trunk basis or via Telephone Company designated access tandem switches. (T)

2. FGC is provided as trunk side switching. The switch trunk equipment is provided with answer and disconnect supervisory signaling. Wink start start-pulsing signals are provided in all offices where available. In those offices where wink start start-pulsing signals are not available, immediate dial pulse signaling is provided.

3. FGC is provided with multifrequency address signaling except in certain electromechanical end office switches where multifrequency signaling is not available. In such switches, the address signaling will be dial pulse. Such called party number signals will be subject to the ordinary transmission capabilities of the Transport provided.

4. The end user must dial an access code to access the IC. In addition to the access code, the telephone number dialed by the customer's end user shall be a seven or ten digit number for calls in the North American Numbering Plan (NANP). For international calls outside the NANP, a seven to twelve digit number may be dialed.

RECEIVED
JUN 21 2021
STATE OF ALASKA
REGULATORY COMMISSION OF ALASKA

ACCESS SERVICES

6. Switched Access Service (Cont'd)

6.3 Provision and Description of Switched Access Service Feature Groups (Cont'd)

6.3.3 Feature Group C (FGC) (Cont'd)

A. Description (Cont'd)

5. FGC switching when used in the terminating direction may be used to access valid telephone numbers in the local exchange area of the terminating end office switch.

B. FGC service may not be used in conjunction with ESALT.

C. Optional Nonchargeable Features

1. Common Switching Optional Features

a. Automatic Number Identification (ANI)

b. Service Class Routing

c. Alternate Traffic Routing

d. Call Capping Arrangement

e. Trunk Access Limitation

2. Optional Nonchargeable Transport Features

a. Operator Trunk, Full Feature Arrangement

b. Supervisory Signaling

D. Chargeable Optional Features

1. Interim NXX Translation

2. Toll Free Data Base Access Service (T)

E. Feature Availability is based on current technology

F. Transmission Specifications

FGC is provided with either Type B or Type C Transmission Specifications as follows:

- When routed directly to the end office, either Type B or C is provided.

RECEIVED
MAY 01 2015
STATE OF ALASKA
REGULATORY COMMISSION OF ALASKA

ACCESS SERVICES

6. Switched Access Service (Cont'd)

6.3 Provision and Description of Switched Access Service Feature Groups (Cont'd)

6.3.3 Feature Group C (FGC) (Cont'd)

F. Transmission Specifications (Cont'd) (T)

- When routed to an access tandem, only Type B is provided.

Type C Transmission Specifications are provided with Interface Group 10. Type B Transmission Specifications are provided with Interface Groups 2 through 10.

G. Testing Capabilities (T)

FGC is provided, in the terminating direction where equipment is available, with seven digit access to balance (100 type) test line, milliwatt (102 type) test line, nonsynchronous or synchronous test line, transmission measuring (105 type) test line, data transmission (107 type) test line, loop around test line, short circuit test line and open circuit test line. Additional testing services are available as set forth in 9.3.1. following for FGC.

H. Design and Traffic Routing (T)

For Feature Group C, the Telephone Company shall design and propose, subject to Section 2.6, Access Network Change Notification, the routing of Switched Access Service , including the selection of facilities from the interface to any switching point and to the end offices where busy hour minutes of capacity are ordered The Telephone Company shall decide if capacity is to be provided by originating only, terminating only, or two-way trunk groups. Finally, the Telephone Company will decide whether trunk side access will be provided through the use of two-wire or four-wire trunk terminating equipment.

RECEIVED
MAY 01 2015
STATE OF ALASKA
REGULATORY COMMISSION OF ALASKA

ACCESS SERVICES

6. Switched Access Service (Cont'd)

6.3 Provision and Description of Switched Access Service Feature Groups (Cont'd)

6.3.3 Feature Group C (FGC) (Cont'd)

H. Design and Traffic Routing (Cont'd) (T)

The proposed selection of facilities and equipment and traffic routing of the service are based on standard engineering methods, available facilities and equipment, and the Telephone Company traffic routing plans, subject to Section 2.6, Access Network Change Notification.

Those Telephone Company offices providing equal access through centralized arrangement are identified in National Exchange Carriers Association, Inc. Tariff F.C.C. No. 4.

6.3.4 Manner of Provision

Switched Access for FGC service is furnished on a busy hour minutes of capacity (BHMC's) basis.

BHMC's are differentiated by type and directionality of traffic carried over a Switched Access Service arrangement. Differentiation of traffic among BHMC types is necessary for the Telephone Company to properly design Switched Access Service to meet the traffic carrying capacity requirement of the customer.

RECEIVED
SEP 13 1991
State of Alaska
Public Utilities Commission

TELEPHONE EXCHANGE CARRIERS OF ALASKA

ACCESS SERVICES

6. Switched Access Service (Cont'd)
   6.3 Provision and Description of Switched Access Service Feature Groups (Cont'd)

      6.3.4 Manner of Provision (Cont'd)

There are two major BHMC categories identified as Originating and Terminating. Originating BHMC's represent access capacity for carrying traffic from the end user to the customer. Terminating BHMC's represent access capacity for carrying traffic from the customer to the end user. When ordering capacity for FGC Access, the customer must, at a minimum, specify access capacity in terms of Originating BHMC's and/or Terminating BHMC's or order by trunk. (L)

(L) Material previously shown on Original Sheet No. 120 has been moved to Original Sheet 120.1.

"Pursuant to Letter Order dated 5/21/91." and
"Pursuant to Letter Order dated 8/20/91."

Tariff Advice No. 5 Effective: July 26, 1991

Issued: 9/13/91
Issued By: Alaska Exchange Carriers Association, Inc.
By: [signature] Title: President

RECEIVED
APR 16 1991
State of Alaska
Public Utilities Commission

6. Switched Access Service (Cont'd)

6.3 Provision and Description of Switched Access Service Feature Groups (Cont'd)

6.3.5 Feature Group D (FGD)

(A) Description

(1) FGD is provided at Telephone Company designated end office switches whether routed directly or via Telephone company designated electronic access tandem switches. Those Telephone Company offices providing equal access through centralized arrangements are identified in NATIONAL EXCHANGE CARRIER ASSOCIATION, INC. TARIFF F.C.C. NO. 4

(2) FGD is provided as trunk side switching through the use of end office or access tandem switch trunk equipment. The switch trunk equipment is provided with wink start start-pulsing signals and answer and disconnect supervisory signaling.

(3) FGD switching is provided with multifrequency address signaling. Up to 12 digits of the called party number dialed by the customer's end user using dual tone multifrequency or dial pulse address signals will be provided by Telephone Company equipment to the customer's premises where the Switched Access Service terminates. Such address signals will be subject to the ordinary transmission capabilities of the Transport provided.

(4) FGD switching, when used in the terminating direction, may be used to access valid telephone numbers in the local exchange area of the terminating end office switch.

RECEIVED
NOV 21 1990
State of Alaska
Public Utilities Commission

ACCESS SERVICES

6. Switched Access Service (Cont'd)

6.3 Provision and Description of Switched Access Service Feature Groups (Cont'd)

6.3.5 Feature Group D (FGD) (Cont'd)

(A) Description (Cont'd)

Additionally, non-access charges will also be billed for calls from a FGD trunk to another customer's service in accordance with that customer's applicable service rates when the Telephone Company performs the billing function for that customer. Calls in the terminating direction will not be completed to 950-1XXX or 950-0XXX access codes, local operator assistance (0- and 0+), Directory Assistance (411 and 555-1212), service code 911 and 10XXX access codes. Calls will be completed to Directory Assistance (NPA-555-1212 or 555-1212) when FGD switching is combined with Directory Assistance switching.

(5) The Telephone Company will establish a trunk group or groups for the customer at end office switches or access tandem switches where FGD switching is provided.

When required by technical limitations, a separate trunk group will be established for each type of FGD switching arrangement provided. Different types of FGD or other switching arrangements may be combined in a single trunk group at the option of the Telephone Company.

(6) The access code for FGD switching is a uniform access code of the form 10XXX. A uniform access code will be the assigned number of all FGD access provided to the customer by the Telephone Company. No access code is required for calls to a customer over FGD switched Access Service if the end user's telephone exchange service is arranged for presubscription to that customer.

Pursuant to Orders No. 6 & 7 in Docket U-90-26

RECEIVED
JUN 21 2021
STATE OF ALASKA
REGULATORY COMMISSION OF ALASKA

ACCESS SERVICES

6. Switched Access Service (Cont'd)

6.3 Provision and Description of Switched Access Service Feature Groups (Cont'd)

6.3.5 Feature Group D (FGD) (Cont'd)

A. Description (Cont'd)

Where no access code is required, the number dialed by the customer's end user shall be a seven or ten digit number for calls in the North American Numbering Plan (NANP). For international calls outside the NANP, a seven to twelve digit number may be dialed. The form of the numbers dialed by the customer's end user is NXX-XXXX, 0 or 1 + NXX-XXXX, NPA + NXX-XXXX, 0 or 1 + NPA + NXX-XXXXX, and, when the end office is equipped for International Direct Distance Dialing (IDDD)m 91 + CC + NN or 011 + CC + NN.

When the 10XXX access code is used, FGD switching also provides for dialing the digit 0 for access to the customer's operator, 911 for access to the Telephone Company's emergency reporting service, or the end-of-dialing digit (#) for cut-through access to the customer's premises.

7. FGD switching will be arranged to accept calls from telephone exchange service locations without the need for dialing 10XXX uniform access code.

8. Unless prohibited by technical limitations, the customer's Interim NXX and/or Toll Free Data Base traffic may, at the option of the customer, be combined in the same trunk group arrangement with the customer's non-Interim NXX and/or Toll Free Data Base traffic. When required by technical limitations, of the customer, a separate trunk group will be established for Interim NXX and/or Toll Free Data Base traffic. (T) (T) (T)

RECEIVED
MAY 01 2015
STATE OF ALASKA
REGULATORY COMMISSION OF ALASKA

ACCESS SERVICES

6. Switched Access Service (Cont'd)

6.3 Provision and Description of Switched Access Service Feature Groups (Cont'd)

6.3.5 Feature Group D (FGD) (Cont'd)

A. Description (Cont'd)

9. When a customer has had FGB access in an end office and subsequently replaces the FGB access with FGD access, at the mutual agreement of the customer and the Telephone Company, the Telephone Company will direct calls dialed by the customer's end users using the customer's previous FGB access code to the customer's FGD access service. The customer must be prepared to handle normally dialed FGD calls, as well as calls dialed with the FGB access code which requires the customer to receive additional address signaling from the end user. Such calls will be rated as FGD. The Telephone Company may, with 90 days' written notice to the customer, discontinue this arrangement.

10. For FGD Switched Access Service between an end user's premises and an ESALT SWC, the customer will be billed the applicable Local Switching, Information Surcharge and Tandem Switched Transport premium rate elements for its FGD usage. The mileage used to determine the monthly rate for the Tandem Switched Facility, when required, is as set forth in Section 7.2.4, following. (N) (N)

B. Nonchargeable Optional Features

1. Common Switching Optional Features

a. Automatic Number Identification (ANI)
b. Service Class Routing
c. Alternate Traffic Routing
d. Call Gapping Arrangement (D)
e Trunk Access Limitation
f. Digital Switched 56 Service

2. Optional Nonchargeable Transport Features

a. Operator Trunk, Full Feature Arrangement
b. Supervisory Signaling

(L) Text Relocated to First Revised Sheet No. 125 (L)

RECEIVED
JUN 21 2021
STATE OF ALASKA
REGULATORY COMMISSION OF ALASKA

ACCESS SERVICES

6. Switched Access Service (Cont'd)

6.3 Provision and Description of Switched Access Service Feature Groups (Cont'd)

6.3.5 Feature Group D (FGD) (Cont'd)

C. Chargeable Optional Features

1. Interim NXX Translation

2. Toll Free Data Base Access Service (T)

3. ESALT Real Time Class of Service/Quality of Service (RT CoS/QoS)

The ESALT RT CoS/QoS optional feature is set forth in Section 6.9.3(C), following.

4. ESALT Entrance Facility Protection (EFP)

The ESALT EFP optional feature is set forth in Section 6.9.3(D), following.

D. Transmission Specifications

FGD is provided with either Type A, Type B, or Type C Transmission Specifications as follows:

- When routed directly to the end office, either Type B or C is provided.
- When routed to an access tandem, only Type A is provided.
- Type A is provided on the transmission path from the access tandem to the end office.

Type C Transmission Specifications are provided with Interface Group A. Type A and Type B Transmission Specifications are provided with Interface Groups 2 through 10.

Type DA Data Transmission Parameters are provided for the transmission path between the customer's premises and the access tandem and between the access tandem and the end office. Type DB Data Transmission Parameters are provided with FGD for the transmission path between the customer's premises and the end office when directly routed to the end office.

RECEIVED

DEC 16 2003

State of Alaska
Regulatory Commission of Alaska

6. Switched Access Service (Cont'd)

6.3 Provision and Description of Switched Access Service Feature Groups (Cont'd)

6.3.5 Feature Group D (FGD) (Cont'd)

E. Testing Capabilities

FGD is provided in the terminating direction, where equipment is available, with seven digit access to balance (100 type) test line, milliwatt (102 type) test line, nonsynchronous or synchronous test line, automatic transmission measuring (105 type) test line, data transmission (107 type) test line, loop around test line, short circuit test line and open circuit test line. Additional Cooperative Acceptance Testing, Additional Automatic Testing and Additional Manual Testing are available as set forth in 9.3.1 following. (T)

F. Design and Traffic Routing

For Feature Group D, the Telephone Company shall design and propose, subject to Section 2.6, Access Network Change Notification, the routing of Switched Access Service, including the selection of the first point of switching and the selection of facilities from the interface to any switching point and to the end offices where trunks are ordered. The Telephone Company shall decide if capacity is to be provided by originating only, terminating only, or two-way trunk groups. Finally, the Telephone Company will decide whether trunk side access will be provided through the use of two-wire or four-wire trunk terminating equipment.

RECEIVED
JUN 21 2021
STATE OF ALASKA
REGULATORY COMMISSION OF ALASKA

ACCESS SERVICES

6. Switched Access Service (Cont'd)

6.3 Provision and Description of Switched Access Service Feature Groups (Cont'd)

6.3.5 Feature Group D (FGD) (Cont'd)

F. Design and Traffic Routing (Cont'd)

Selection of facilities and equipment and traffic routing of the service are based on standard engineering methods, available facilities and equipment, and the Telephone Company traffic routing plans. The Telephone Company will propose the first point(s) of switching , subject to Section 2.6, Access Network Change Notification. Those Telephone Company offices providing equal access through centralized arrangement are identified in National Exchange Carrier Association, Inc. Tariff F.C.C. No. 4.

6.4 WATS Access Line

A WATS Access Line may, at the option of the customer, be provided for use with Switched Access Service. A WATS Access Line provides a connection between a customer's designated end user's premises and a Telephone Company end office switch capable of performing the necessary switching functions for Toll Free Service, WATS or similar services, and is provided only for use at the closed end of such service. (T)

WATS Access Lines are provided as either an effective two-wire or effective four-wire transmission path. Each transmission path is provided with Standard Transmission Specifications and Data Transmission Parameters as set forth in 11.2.1 and 11.2.2 following. At the option of the customer, the WATS Access Line may be ordered with the Improved Two-Wire Voice Transmission Specifications (Guaranteed specifications are set forth in 11.2.3 following).

6.5 Transmission Specifications

Each Switched Access Service transmission path is provided with standard transmission Specifications. There are two different standard specifications (Types B and C). The standard for a particular transmission path is dependent on the Feature Group, the Interface Group and whether the service is directly routed or via

RECEIVED
NOV 21 1990
State of Alaska
Public Utilities Commission

ACCESS SERVICES

6. Switched Access Service (Cont'd)

6.5 Transmission Specifications (Cont'd)

an access tandem. In addition, the WATS Access Line is provided with standard transmission specifications for two-wire and four-wire. The available transmission specifications are set forth in 11.2.1 following. Data Transmission Parameters are also provided with each Switched Access Service transmission path and WATS Access Line. The Telephone Company will upon notification by the customer that the data parameters set forth in 11.2.2 are not being met, conduct tests independently or in cooperation with the customer, and take any necessary action to insure that the data parameters are met.

In addition, the WATS Access Line may be optionally provided with Improved Two-Wire Voice Transmission Specifications as set forth in 11.2.3 following.

The Telephone Company will maintain existing transmission specifications on functioning service configurations installed prior to the effective date of this tariff except that service configurations having performance specifications exceeding the standards listed in this provision will be maintained at performance levels specified in this tariff.

The transmission specifications concerning Switched Access Service are immediate action limits and are set forth in 11.2 following. Acceptance limits are set forth in Technical Reference NPL 000334. This Technical Reference also provides the basis for determining Switched Access Service maintenance limits.

FGC is provided with either Type B or Type C Transmission Specifications as follows:

- When routed directly to the end office either Type B or Type C is provided.
- When routed to an access tandem only Type B is provided
- Type B or Type C is provided on the transmission path from the access tandem to the end office.

Pursuant to Orders No. 6 & 7 in Docket U-90-26

RECEIVED
NOV 21 1990
State of Alaska
Public Utilities Commission

ACCESS SERVICES

6. Switched Access Service (Cont'd)

6.5 Transmission Specifications (Cont'd)

Type C Transmission Specifications are provided with Interface Group 1 when routed directly to an end office. Type B is provided with Interface Groups 2 through 10, whether routed directly to an end office or to an access tandem.

Type DB Data Transmission Parameters are provided with FGC for the transmission path between the customer's premises and the end office when directly routed to the end office, and Type DB Data Transmission Parameters are provided for the transmission path between the customer's premises and the access tandem and between the access tandem and the end office when routed via an access tandem.

6.6 Obligation of the Telephone Company

In addition to the obligations of the Telephone Company set forth in Section 2. preceding, the Telephone Company has certain other obligations pertaining only to the provision of Switched Access Service. These obligations are as follows:

6.6.1 Network Management

The Telephone Company will administer its network to insure the provision of acceptable service levels to all telecommunications users of the Telephone Company's network services. Generally, service levels are considered acceptable only when both end users and customers are able to establish connections with little or no delay encountered within the Telephone Company network. The Telephone Company maintains the right to apply protective controls, i.e., those actions, which selectively cancel the completion of traffic, over any traffic carried over its network, including that associated with a customer's Switched Access Service. Generally, such protective measures would only be taken as a result of occurrences such as failure or overload of Telephone Company or customer facilities, natural disasters, mass calling or national security demands.

RECEIVED

NOV 15 2002

State of Alaska
Regulatory Commission of Alaska

ACCESS SERVICES

6. Switched Access Service (Cont'd)

6.6 Obligation of the Telephone Company (Cont'd)

6.6.2 Reserved For Future Use

6.6.3 Provision of Service Performance Data

Subject to availability, end-to-end service performance data available to the Telephone Company through its own service evaluation routines, may be made available to the customer based on previously arranged intervals and format. These data provide information on overall end-to-end call completion and non-completion performance. These data do not include service performance data which are provided under other tariff sections, e.g., testing service results. The charges for provision of this data will be determined on an individual case basis.

6.6.4 Trunk Group Measurement Reports

Subject to availability, the Telephone Company will make available trunk group data in the form of usage in CCS, peg count and overflow, to the customer based on previously agreed to intervals.

6.6.5 Determination of Number of Transmission Paths

For Feature Groups A and B, which are ordered on a per line or per trunk basis respectively, and Feature Groups C and D when ordered on a per trunk basis, the customer specifies the type of transport facilities and the number of channels in the order for service. (C) (D)

6.6.6 Design Blocking Measurement

The Telephone Company will design the facilities used in the provision of Switched Access Service to meet the blocking probability criteria as set forth in (A) following and (B) following.

Pursuant to U-00-24(9) (D)

RECEIVED
NOV 21 1990
State of Alaska
Public Utilities Commission

ACCESS SERVICES

6. Switched Access Service (Cont'd)

6.6 Obligation of the Telephone Company (Cont'd)

6.6.6 Design Blocking Measurement (Cont'd)

(A) For Feature Groups B, C and D the design blocking objective will be no greater than one percent (.01) between the point of termination at the customer's designated premises and the end office switch, whether the traffic is directly routed without an alternate route or routed via an access tandem. Standard traffic engineering methods as set forth in reference document Telecommunications Transmission Engineering - Volume 3 - Networks and Services (Chapters 6-7) will be used by the Telephone Company to determine the number of transmission paths required to achieve this level of blocking.

(B) The Telephone Company will perform routine measurement functions to assure that an adequate number of transmission paths are in service. The Telephone Company will recommend that additional capacity (i.e., busy hour minutes of capacity) be ordered by the customer when additional paths are required to reduce the measured blocking to the designed blocking level. For the capacity ordered, the design blocking objective is assumed to have been met if the routine measurements show that the measured blocking does not exceed the threshold listed in the following tables.

(1) For transmission paths carrying only first routed traffic direct between an end office and customer's designated premises without an alternate route, and for paths carrying only overflow traffic, the measured blocking thresholds are as follows:

RECEIVED
NOV 21 1990
State of Alaska
Public Utilities Commission

TELEPHONE EXCHANGE CARRIERS OF ALASKA

ACCESS SERVICES

6. Switched Access Service (Cont'd)

6.6 Obligations of the Telephone Company (Cont'd)

6.6.6 Design Blocking Measurement (Cont'd)

(B) (1) (Cont'd)

Number of Transmission Paths Per Trunk Group	Measured Blocking Thresholds in the Time Consistent Busy Hour for the Number of Measurements Taken Between 8:00 a.m. and 11:00 p.m. Per Trunk Group			
	15-20 Measurements	11-14 Measurements	7-10 Measurements	3-6 Measurements
2	.070	.080	.090	.140
3	.050	.060	.070	.090
4	.050	.060	.070	.080
5-6	.040	.050	.060	.070
7 or more	.030	.035	.040	.060

(2) For transmission paths carrying first routed traffic between an end office and customer's premises via an access tandem, the measured blocking thresholds are as follows:

Pursuant to Orders No. 6 & 7 in Docket U-90-26

RECEIVED
NOV 21 1990
State of Alaska
Public Utilities Commission

ACCESS SERVICES

6. Switched Access Service (Cont'd)

6.6 Obligations of the Telephone Company (Cont'd)

6.6.6 Design Blocking Measurement (Cont'd)

(B) (2) (Cont'd)

Number of Transmission Paths Per Trunk Group	Measured Blocking Thresholds in the Time Consistent Busy Hour for the Number of Measurements Taken Between 8:00 a.m. and 11:00 p.m. Per Trunk Group			
	15-20 Measurements	11-14 Measurements	7-10 Measurements	3-6 Measurements
2	.045	.055	.060	.095
3	.035	.040	.045	.060
4	.035	.040	.045	.055
5-6	.025	.035	.040	.045
7 or more	.020	.025	.030	.040

6.6.7 Design Layout Report

At the request of the customer, the Telephone Company will provide to the customer the makeup of the facilities and services provided from the customer's premises to the first point of switching. This information will be provided in the form of a Design Layout Report. Design Layout Reports will also be provided for WATS Access Lines when specifically requested by the customer. The Design Layout Report will be provided to the customer at no charge, and will be reissued or updated whenever these facilities are materially changed.

Pursuant to Orders No. 6 & 7 in Docket U-90-26

JUN 1 1 2009

STATE OF ALASKA
REGULATORY COMMISSION OF ALASKA

ACCESS SERVICES

6. Switched Access Service (Cont'd)

6.6.8 Testing

A. Acceptance Testing

At no additional charge the Telephone Company will, at the customer's request, cooperatively test at the time of installation, the following parameters: loss, C-notched noise, C-message noise, 3-tone slope, d.c. continuity and operational signaling. When the Local Transport is provided with Interface Groups 2 through 10, and the Transport Termination is two-wire (i.e., there is a four-wire to two-wire conversion in Local Transport), balance parameters (equal level echo path loss) may also be tested.

B. Routine Testing

At no additional charge, the Telephone Company will, at the customer's request, test after installation on an automatic or manual basis, 1004 Hz loss, C-message noise and Balance (Return loss).

In the case of automatic testing, the customer shall provide remote office test lines and 105 test lines with associated responders or their functional equivalent.

The frequency of these tests will be that which is mutually agreed upon by the customer and the Telephone Company, but shall consist of not less than quarterly 1004 Hz Loss and C-message noise tests and an annual Balance test. Trunk test failures requiring customer participation for trouble resolution will be provided to the customer on an as-occurs basis.

Additional tests may be ordered as set forth in 9.3.1 following. Charges for these additional tests are set forth in Section 13 and Section 14, following. (N)

RECEIVED
MAY 01 2015
STATE OF ALASKA
REGULATORY COMMISSION OF ALASKA

ACCESS SERVICES

6. Switched Access Service (Cont'd)

6.7 Obligations of the Customer

In addition to the obligations of the customer set forth in Section 2.3, the customer has certain specific obligations pertaining to the use of Switched Access Service. These obligations are as follows:

6.7.1 Supervisory Signaling

The customer's facilities shall provide the necessary on-hook, off-hook, answer and disconnect supervision.

6.7.2 Trunk Group Measurement Reports

With the agreement of the customer, trunk group data in the form of usage in CCS, peg count and overflow for its end of all access trunk groups, where technologically feasible, will be made available to the Telephone Company. These data will be used to monitor trunk group utilization and service performance and will be provided based on previously arranged intervals and format.

6.7.3 Call Signaling

Depending on the signaling system used by the customer in its network, the customer's facilities shall transmit the following call signaling information to the Telephone Company on traffic the Customer's end users originate which is handed off for termination on the Telephone Company's network.

A. Signaling System 7 (SS&) Signaling

When the Customer uses SS7 signaling, it will transmit the Calling Party Number (CPN) or, if different from the CPN, the Charge Number (CN) information in the SS7 signaling stream.

B. Multi-Frequency (MF) Signaling

When the customer uses MF signaling, it will transmit the number of the calling party or, if different from the number of the calling party, the Charge Number (CN) information in the MF Automatic Number Identification (ANI) field.

(L)

(L) Text relocated to First Revised Sheet 135.1

RECEIVED
MAY 01 2015
STATE OF ALASKA
REGULATORY COMMISSION OF ALASKA

ACCESS SERVICES

6. Switched Access Service (Cont'd)

6.7.3 Call Signaling (Cont'd

C. Internet Protocol (IP) Signaling (L)

When the Customer uses IP signaling, it will transmit the telephone number of the calling party or, if different from the telephone number, the billing number of the calling party. (L)

When the customer uses IP signaling in conjunction with ESALT, it will transmit call signaling data that must either: 1) conform to an active 10-digit North American Numbering Plan or directory number which is associated with the geographic location of the originating calling party (i.e., Calling Party Number and/or Automatic Number Identification) or 2) represent IP equivalent call signaling that is mutually agreed upon by the customer and Telephone Company at the time the customer places its order for ESALT. (N) (N)

6.8 Rate Regulations

This section contains the specific regulations governing the rates and charges that apply for Switched Access Service.

6.8.1 Application of Rates and Charges

A. Nonrecurring Charges

Nonrecurring charges are one-time charges that apply for a specific work activity (i.e., installation or change to an existing service). The types of nonrecurring charges that apply for Switched Access Service are: installation of service, Trunk Activation, Interim NXX Translation optional feature and service rearrangements. These charges, with the exception of the Interim NXX Translation optional feature, are in addition to the Access Order Charge.

(L) Text relocated from First Revised Sheet 135

RECEIVED
MAY 01 2015
STATE OF ALASKA
REGULATORY COMMISSION OF ALASKA

ACCESS SERVICES

6. Switched Access Service (Cont'd)
6.8 Rate Regulations (Cont'd)

6.8.1 Application of Rates and Charges (Cont'd)

A. Nonrecurring Charges (Cont'd)

1. Installation of Service

For Entrance Facilities, a Local Transport nonrecurring installation charge will be applied at the serving wire center for each Entrance Facility installed. (N) (D)

Except as specified below for ESALT, when Direct Trunked Transport is ordered to the end office, a Local Transport nonrecurring trunk activation charge will be applied at the end office on a per order basis for each group of 24 Direct Trunked Transport trunks or fraction thereof that is activated at the end office.

Except as specified below for ESALT, when Direct Trunked Transport is ordered to the access tandem, a Local Transport nonrecurring trunk activation charge will be applied at the access tandem on a per order basis for each group of 24 Direct Trunked Transport trunks or fraction thereof that is activated at the access tandem. (D)

A maximum of 24 trunks can be activated on a DS1 facility and a maximum of 672 trunks can be activated on a DS3 facility.

An ESALT Direct Trunked Termination nonrecurring charge, as specified in Section 14, following, will be applied per ESALT Direct Trunked Termination installed. (N)

2. Interim NXX Translation Optional Feature

This nonrecurring charge applies to the initial order for the installation of the Interim NXX Translation optional feature with Feature Group C or Feature Group D Switched Access Service and for each subsequent order received to add or change NXX translation codes. This charge applies whether this optional feature is installed coincident with or at any time subsequent to the installation of Switched Access Services.

3. Service Rearrangements

All changes to existing services other than changes involving administrative activities and the off-hook supervisory signaling of FGA Access Services, will be treated as a discontinuance of the existing service and an installation of a new service. The nonrecurring charge described in (1) preceding.

RECEIVED
NOV 21 1990
State of Alaska
Public Utilities Commission

ACCESS SERVICES

6. Switched Access Service (Cont'd)

6.8 Rate Regulation (Cont'd)

6.8.1 Application of Rates and Charges (Cont'd)

(A) Nonrecurring Charges (Cont'd)

(3) Service Rearrangements (Cont'd)

will apply for this work activity. Moves that change the physical location of the point of termination are described and charged for as set forth in 6.8.1 following.

- If, due to technical limitations of the Telephone Company, a customer could not combine its Interim NXX traffic with its other trunk side Switched Access Service, no charge shall apply to combine these trunk groups when it becomes technically possible.

The following administrative changes will be made without charge:

- Change of customer name,
- Change of customer or customer's end user premises address when the change of address is not a result of physical relocation of equipment,
- Change in billing data (name, address, or contact name or telephone number),
- Change of agency authorization,
- Change of customer circuit identification,
- Change of billing account number,
- Change of customer test line number,
- Change of customer or customer's end user contact name or telephone number, and
- Change of jurisdiction.

Changes and additions to existing Switched Access Services which are necessary due to Telephone Company initiated network reconfigurations, and required to provide the same grade of service to the customer that existed prior to the reconfiguration, will be made without charge to the customer.

Pursuant to Orders No. 6 & 7 in Docket U-90-26

RECEIVED
NOV 21 1990
State of Alaska
Public Utilities Commission

TELEPHONE EXCHANGE CARRIERS OF ALASKA

ACCESS SERVICES

6. Switched Access Service (Cont'd)

6.8 Rate Regulations (Cont'd)

6.8.1 Application of Rates and Charges (Cont'd)

(B) Moves

A move involves a change in the physical location of one of the following:

- the point of termination at the customer's premises
- the customer's premises

The charges for the move are dependent on whether the move is to a new location within the same building or to a different building.

(1) Moves Within the Same Building

When the move is to a new location within the same building, the charge for the move will be an amount equal to one half of the nonrecurring charge for the capacity affected. There will be no change in the minimum period requirements.

(2) Moves to a Different Building

Moves to a different building will be treated as a discontinuance and start of service and all associated nonrecurring charges will apply. New minimum period requirements will be established for the new service. The customer will also remain responsible for satisfying all outstanding minimum period charges for the discontinued service.

RECEIVED

JUN 1 1 2009

STATE OF ALASKA
REGULATORY COMMISSION OF ALASKA

ACCESS SERVICES

6. Switched Access Service (Cont'd)

6.8 Rate Regulations (Cont'd)

6.8.1 Application of Rates and Charges (Cont'd)

C. Recurring Charges

1. Access

With the exception of the Equal Access Recovery Charge, all recurring rates as set forth in Section 13 and Section 14, following, apply to all Feature Groups A, B, C, and D Switched Access Services. Customer usage will be accumulated for billing on a monthly basis, or another period. The Telephone Company will notify the customer if billing is to occur on a basis other than monthly. (N)

2. Equal Access Recovery Charge (EARC)

The Equal Access Recovery Charge is a monthly charge assessed to customers who obtain Feature Group D Switched Access Service. Application of this charge is as follows:

a. The EARC is based upon intrastate Feature Group D Trunks or the total number of presubscribed equal access lines.

b. EARC rates are local exchange carrier specific and are found in Section 13 and Section 14, following. (N)

D. Notice of Equal Access Conversion

1. The Telephone Company will provide written notification to all access customers of record within Alaska that an end office is scheduled to be converted to an equal access end office. This notification will be sent, via certified

RECEIVED
MAR 24 1992
State of Alaska
Public Utilities Commission

TELEPHONE EXCHANGE CARRIERS OF ALASKA

ACCESS SERVICES

6. Switched Access Service (Cont'd)

6.8 Rate Regulations (Cont'd)

6.8.1 Application of Rates and Charges (Cont'd)

(D) Notice of Equal Access Conversion (Cont'd)

(1) (Cont'd)

U.S. Mail, to each customer of record in Alaska where the conversion is scheduled to occur, at least six months in advance of the conversion date. (L)

The customer will have the choice of converting all or part of the existing services to equal access (i.e., Feature Group D) or retaining the existing services. The conversion of existing services will be at no charge provided the order to convert such services to Feature Group D is received as set forth in 6.8.1(D)(2) following.

(2) Changes from one type of Feature Group to another will be treated as a discontinuance of one type of service and a start of another. Nonrecurring charges will apply, with one exception. When a customer upgrades a Feature Group A or B service to a Feature Group D service and when Feature Group C is upgraded to Feature Group D coincident with the availability of Feature Group D in an end office which does not currently have interstate Feature Group D, the nonrecurring charges will not apply and minimum period obligations will not change, i.e., the time elapsed in the existing minimum period obligation will be credited to the minimum period obligations for FGD service, subject to the following limitations. (L)(L1) (L1)

(L) Text relocated from Original Sheet No. 139
(L1) Text relocated from Original Sheet No. 140

Tariff Advice No. 8-999 Effective: January 1, 1992

Issued: _____
Issued By: Alaska Exchange Carriers Association, Inc.
By: _____ Title: President

RECEIVED
MAR 24 1992
State of Alaska
Public Utilities Commission

TELEPHONE EXCHANGE CARRIERS OF ALASKA

ACCESS SERVICES

6. Switched Access Service (Cont'd)

6.8 Rate Regulations (Cont'd)

6.8.1 Application of Rates and Charges (Cont'd)

(D) Notice of Equal Access Conversion (Cont'd)

(2) (Cont'd) (L)

(L)

In order to avoid the imposition of nonrecurring charges a customer which is a participant in the intrastate presubscription allocation process (i.e., is on the presubscription ballot) must:

- submit its order to disconnect Feature Group A and/or B within 30 days after the date the results of the final allocation of customers in an end office are actually received by the customer, and

- make the effective date for disconnection of the Feature Group A and/or B Access Services no later than 60 days after the final allocation results are received by the customer, and

- the end office scheduled to convert to intrastate equal access does not already provide interstate equal access.

A customer which is not a participant in the allocation process (i.e., is not on the presubscription ballot) is subject to the same rules preceding. The time frames for the non-participating customer(s) are the same as those which apply to the last customer to receive the results of the final allocation of customers in an end office who is a participant in the allocation process. For all other changes from one type of feature Group to another, new minimum period obligations will be established

(L) Text relocated to Original Sheet No. 139.1

RECEIVED

JUN 16 2011

STATE OF ALASKA
REGULATORY COMMISSION OF ALASKA

ACCESS SERVICES

6. Switched Access Service (Cont'd)

6.8.2 Reserved For Future Use

6.8.3 Carrier Common Line Access Service is as set forth in Section 3. (T)

6.8.4 Measuring Access Minutes

Desired priority of the traffic sensitive minute volume source is as follows:

1. Measurement by the Telephone Company
2. Measurement by the Interexchange Carrier as reported to and acceptable to the Telephone Company
3. Assumed minutes as listed in 13.2.5 or an estimate by the Telephone Company based on previously known volumes

A. Feature Group A

Customer Feature Group A traffic to end offices will be measured (i.e., recorded) or assumed by the Telephone Company at end office switches. Originating and terminating calls ;will be measured (i.e., recorded) or assumed by the Telephone Company to determine the basis for computing chargeable access minutes. In the event the Customer message detail is not available from the Telephone Company, the Telephone Company will obtain the volume of access minutes from the IC, use assumed minutes as listed in 13.2.5, or use an estimate based on previously known volumes. The priority as set forth above will be used in selecting the method.

For terminating calls over FGA and for originating calls over FGA (when the off-hook supervisory signal is provided by the Customer's equipment before the called party answers), the measured minutes are the chargeable access minutes. For originating calls over FGA (when the off-hook supervisory signal is forwarded by the Customer's equipment when the called party answers), chargeable originating access minutes are derived from recorded minutes using the same formula as set forth in 6.8.4(C) following for Feature Group C.

RECEIVED
NOV 21 1990
State of Alaska
Public Utilities Commission

ACCESS SERVICES

6. Switched Access Service (Cont'd)

6.8.4 Measuring Access Minutes (Cont'd)

(A) Feature Group A(Cont'd)

For originating calls over FGA, usage measurement begins when the originating FGA first point of switching receives an off-hook supervisory signal forwarded from the customer's point of termination. This off-hook signal may be provided by the customer's equipment before the called party answers, or forwarded by the customer's equipment when the called party answers.

The measurement of originating call usage over FGA ends when the originating FGA first point of switching receives an on-hook supervisory signal from either the originating end user has disconnected, or the customer's point of termination, whichever is recognized first by the first point of switching.

For terminating calls over FGA, usage measurement begins when the terminating FGA first point of switching receives an off-hook supervisory signal from the terminating end user's end office, indicating the terminating end user has answered. The measurement of terminating call usage over FGA end when the terminating FGA first point of switching receives an on-hook supervisory signal from either the terminating end user's end office, indicating the terminating end user has disconnected, or the customer's point of terminating, whichever is recognized first by the first point of switching.

FGA access minutes or fractions thereof, the exact value of the fraction begin a function of the switch technology where the measurement is made, are accumulated over the billing period for each line or hunt group, and are then rounded up to the nearest access minute for each line or hunt group.

Pursuant to Orders No. 6 & 7 in Docket U-90-26

RECEIVED
APR 16 1991
State of Alaska
Public Utilities Commission

6. Switched Access Service (Cont'd)

6.8.4 Measuring Access Minutes (Cont'd)

(A) Feature Group A(Cont'd)

Assumed minutes are used for FGA services which originate or terminate in end offices not equipped with measurement capabilities and in such cases are the chargeable access minutes.
Where originating and terminating measurement capability does not exist for Feature Group A provided to the first point of switching, the number of access minutes will be assumed as set forth in 13.2.5 following.

(B) Feature Group B

Customer traffic to end offices will be measured (i.e., recorded) or assumed by the Telephone Company at end office switches or access tandem switches. Originating and terminating calls will be measured D (i.e., recorded) or assumed by the Telephone Company to determine the basis for computing chargeable access minutes. In the event the measured customer message detail is not available from the Telephone Company, the Telephone company wil obtain the volume of access minutes from the IC, use assumed minutes as listed in 13.2.5, or use an estimate based on previously known volumes. The priority as set forth above will be used in selecting the method.

For both originating and terminating calls over FGB the measured minutes are the chargeable access minutes.

For originating calls over FGB, usage measurement begins when the originating FGB first point of switching receives answer supervision forwarded from the customer's point of termination, indicating the customer's equipment has answered.

Pursuant to Orders No. 6 & 7 in Docket U-90-26

RECEIVED
APR 16 1991
State of Alaska
Public Utilities Commission

6. Switched Access Service (Cont'd)

6.8.4 Measuring Access Minutes (Cont'd)

(B) Feature Group B (Cont'd)

The measurement of originating call usage over FGB ends when the originating FGB first point of switching receives disconnect supervision from either the originating end user's end office, indicating the originating end user has disconnected, or the customer's point of termination, whichever is recognized first by the first point of switching.

For terminating calls over FGB, usage measurement begins when the terminating FGB first point of switching receives answer supervision from the terminating end user's end office, indicating the terminating end user has answered.

The measurement of terminating call usage over FGB ends when the terminating FGB first point of switching receives disconnect supervision from either the terminating end user's end office, indicating the terminating end user has disconnected, or the customer's point of termination, whichever is recognized first by the first point of switching.

FGB access minutes or fractions thereof, the exact value of the fraction being a function of the switch technology where the measurement is made, are accumulated over the billing period for each end office, and are then rounded up to the nearest access minute for each end office.

Assumed minutes are used for FGB services which originate or terminate in end offices not equipped with measurement capabilities and in such cases are the chargeable access minutes, as set forth in 13.2.5 following.

RECEIVED
JUN 21 2021
STATE OF ALASKA
REGULATORY COMMISSION OF ALASKA

ACCESS SERVICES

6. Switched Access Service (Cont'd)

6.8 Rate Regulations (Cont'd)

6.8.4 Measuring Access Minutes (Cont'd)

C. Feature Group C

Customer traffic to end offices will be measured (i.e., recorded) by the Telephone Company at end office switches or access tandem switches. Originating and terminating calls will be measured or imputed by the Telephone Company to determine the basis for computing chargeable access minutes. In the event the measured customer message detail is not available from the Telephone Company, the Telephone Company will obtain the volume of access minutes from the IC or use an estimate based on previously known volumes. The priority as set forth above will be used in selecting the method.

For terminating calls over FGC (and FGD that use FGC records to develop access minutes), the measured minutes are the chargeable access minutes. For originating calls over FGC (and FGD that use FGC records to develop access minutes) chargeable originating access minutes are derived from the measured minute records in the following manner:

Step 1: For each major call type (e.g. DDD, Operator Handled, Toll Free, Directory Assistance, etc) obtain the measured originating messages and conversation minutes from the appropriate traffic data recording sources. (T)

RECEIVED
JUN 21 1996
State of Alaska
Public Utilities Commission

TELEPHONE EXCHANGE CARRIERS OF ALASKA

ACCESS SERVICES

6. Switched Access Service (Cont'd)

6.8 Rate Regulations (Cont'd)

6.8.4 Measuring Access Minutes (Cont'd)

(C) Feature Group C (Cont'd)

Step 2: For each call type, develop the Total Originating Attempts using the originating measured messages from Step 1, and applying an Attempts per Message factor obtained either from a study specific to the Telephone Company or from a study based upon an industry wide sample. The attempts per message factor study is an analysis, by major call type, of the completion rate of the total attempts which receive acknowledgement from the customer. (C) (L) (C) (L)

(L) Text relocated from Original Sheet No. 145.

Tariff Advice No. 29 Effective: May 28, 1996

Issued:
Issued By: Alaska Exchange Carriers Association, Inc.
By: Steve Dunlap Title: Vice President

RECEIVED
JUN 21 1996
State of Alaska
Public Utilities Commission

TELEPHONE EXCHANGE CARRIERS OF ALASKA

ACCESS SERVICES

6. Switched Access Service (Cont'd)

6.8 Rate Regulations (Cont'd)

6.8.4 Measuring Access Minutes (Cont'd)

(C) Feature Group C (Cont'd)

Step 3: For each call type, develop the Non-Conversation Time Additive (NCTA) by applying a Non-Conversation Time per Attempt factor obtained from company specific or industry study (referred to in Step 2) to the Total Originating Attempts determined in Step 2. The NCTA per Attempt Ratio is obtained from the sample study identified in Step 2 by measuring the non-conversation time associated with both completed calls and unsuccessful attempts. (C)

Step 4: For each call type, develop the total chargeable Originating Access Minutes by adding the Non-Conversation Time Additive (NCTA) derived in Step 3 to the Total Originating Conversation Minutes obtained in Step 1. (C)

RECEIVED
JUN 21 1996
State of Alaska
Public Utilities Commission

TELEPHONE EXCHANGE CARRIERS OF ALASKA

ACCESS SERVICES

6. Switched Access Service (Cont'd)

6.8 Rate Regulations (Cont'd)

6.8.4 Measuring Access Minutes (Cont'd)

(C) Feature Group C (Cont'd)

Following is an example that illustrates how the chargeable originating access minutes for each call type are derived from the measured originating messages, conversation minutes, and study factors using the steps previously set forth. (C)

Step 1:
Measured Originating Messages = 1,000 (C)
Measured Originating Conversation Minutes = 7,000

Step 2:
Originating Attempts per Message factor from study = 1.597
Total Originating Attempts = 1,000 messages X 1.5970 = 1,597

Step 3:
Non Conversation Time per Attempt factor from study = .372
Total Non Conversation Time Additive (NCTA) =
.372 X 1,597 = 594

Step 4:
Total Chargeable Originating Access Minutes =
7,000 conversation minutes + 594 (NCTA) = 7,594 (C)

Measured conversation minutes and fractions thereof, the exact value of the fraction being a function of the switch technology where the measurement is made, are accumulated over the billing period for each end office, and are then rounded up to the nearest whole minute for each end office. (C)
(L)

(L)

(L) Text relocated to Original Sheet No. 147.1.

Tariff Advice No. 29 Effective: May 28, 1996

Issued:
Issued By: Alaska Exchange Carriers Association, Inc.
By: Steve Hamby Title: Vice President

RECEIVED
JUN 21 1996
State of Alaska
Public Utilities Commission

TELEPHONE EXCHANGE CARRIERS OF ALASKA

ACCESS SERVICES

6. Switched Access Service (Cont'd)

6.8 Rate Regulations (Cont'd)

6.8.4 Measuring Access Minutes (Cont'd)

(C) Feature Group C (Cont'd)

Originating Usage (L)

For originating calls over FGC, usage measurement begins when the originating FGC first point of switching receives answer supervision from the customer's point of termination, indicating the called party has answered.

The measurement of originating call usage over FGC ends when the originating FGC first point of switching receives disconnect supervision from either the originating end user's end office, indicating the originating end user has disconnected, or the customer's point of termination, whichever is recognized first by the first point of switching. (L)

(L) Text relocated from Original Sheet No. 147.

Tariff Advice No. 29 Effective: May 28, 1996

Issued:
Issued By: Alaska Exchange Carriers Association, Inc.
By: Steve Hamlen Title: Vice President

RECEIVED

JUN 2 0 2007

STATE OF ALASKA
REGULATORY COMMISSION OF ALASKA

6. Switched Access Service (Cont'd)

6.8 Rate Regulations (Cont'd)

6.8.4 Measuring Access Minutes (Cont'd)

Feature Group C (Cont'd)

Terminating Usage

For terminating calls over FGC the chargeable access minutes are either measured or imputed. For terminating calls over FGC where measurement capability does not exist, terminating FGC usage is imputed from originating usage, excluding usage from calls to closed end services or Directory Assistance Services.

For terminating calls over FGC where measurement capability exists, measurement of chargeable access minutes begins when the terminating FGC first point of switching receives answer supervision from the terminating end user's end office, indicating the terminating end user has answered. This measurement ends when the terminating FGC first point of switching receives an on-hook supervisory signal from the terminating end user's end office, indicating the terminating end user has disconnected, or the customer's point of termination, whichever is recognized first by the first point of switching.

D. Feature Group D

Customer traffic to end offices will be recorded at end office switches or access tandem switches. Originating and terminating calls will be measured or imputed to determine the basis for computing chargeable access minutes. In the event the measured customer message detail is not available from the Telephone Company, the Telephone Company will obtain the volume of access minutes from the IC or use an estimate based on previously known volumes. The priority as set forth above will be used in selecting the method.

FGD access minutes or fractions thereof, the exact value of the fraction being a function of the switch technology where the measurement is made, are accumulated over the billing period for each end office, and are then rounded up to the nearest access minute for each end office. (N) | (N)

RECEIVED
June 19, 2020
STATE OF ALASKA
REGULATORY COMMISSION OF ALASKA

ACCESS SERVICES

6. Switched Access Service (Cont'd)

6.8 Rate Regulations (Cont'd)

6.8.4 Measuring Access Minutes (Cont'd)

Feature Group D (Cont'd)

Originating Usage

For originating calls over FGD the measured minutes are the chargeable access minutes.

For originating calls over FGD, usage measurement begins when the originating FGD first point of switching receives the first wink supervisory signal forwarded from the customer's point of termination.

The measurement of originating call usage over FGD ends when the originating FGD first point of switching receives disconnect supervision from either the originating end user's end office, indicating the originating end user has disconnected, or the customer's point of termination, whichever is recognized first by the first point of switching.

Terminating Usage

For terminating calls over FGD the chargeable access minutes are either measured or imputed in accordance with a bill and keep methodology. (T)

For terminating calls over FGD where measurement capability exists, the measurement of chargeable access minutes begins when the terminating FGD first point of switching receives answer supervision from the terminating end user's end office, indicating the terminating end (T) user has answered. This measurement ends when the terminating FGD first point of (T) switching receives disconnect supervision from either the terminating end user's end office, indicating the terminating end user has disconnected, or the customer's point of termination, whichever is recognized first by the first point of switching.

RECEIVED
AUG 19 2026
STATE OF ALASKA
REGULATORY COMMISSION OF ALASKA

ACCESS SERVICES

6. Switched Access Service (Cont'd)

6.8 Rate Regulations (Cont'd)

6.8.4 Measuring Access Minutes (Cont'd)

D. Feature Group D (Cont'd)

For termination calls over FGD, where measurement capability does not exist, terminating FGD usage is imputed from originating usage, excluding usage from calls to closed end services or directory assistance services.

(D)

(D)

6.8.5 Applications of Rates for Extension Service

Feature Group C and D WATS Access Lines are available with extensions, (additional terminations of the service at different buildings). WATS Access Line extensions are provided and charged for as Special Access Service as described in Section 7.

D – Deleted language regarding the billing of wholesale users on behalf of wholesale providers as AECA is discontinuing this service offering.

RECEIVED
December 6, 2024
STATE OF ALASKA
REGULATORY COMMISSION OF ALASKA

ACCESS SERVICES

6. Switched Access Service (Cont'd)

6.8 Rate Regulations (Cont'd)

6.8.6 Network Blocking

The customer will be notified by the Telephone Company to increase its capacity (busy hour minutes of capacity or quantities of trunks) when excessive trunk group blocking occurs on groups carrying Feature Group traffic and the measured access minutes for that hour exceed the capacity purchased. Excessive trunk group blocking occurs when the blocking thresholds stated in 6.6.6 preceding are exceeded. They are predicated on time consistent, hourly measurements over a 30-day period using the five highest days of the week, excluding national holidays.

6.8.7 Toll Free Data Base Access Service

A Basic Query or Vertical Feature Query charge applies for each query that is launched to a Toll Free data base and identifies the customer to whom the call will be delivered. Query charges, as set forth in 13.2.2 (H) will only be applied by those companies whose wire centers are identified as assessing query charges in the NATIONAL EXCHANGE CARRIER ASSOCIATION, INC. TARIFF F.C.C. NO. 4. (T)

When Feature Group C or Feature Group D switched access service is used for the provision of Toll Free Data Base Access Service and the total minutes of use and/or count of queries can be determined for each customer at a tandem or SSP but can not be determined by individual end office, an allocation method will be utilized to determine minutes of use and/or queries by end office and customer.

RECEIVED
JUN 21 2021
STATE OF ALASKA
REGULATORY COMMISSION OF ALASKA

ACCESS SERVICES

6. Switched Access Service (Cont'd)

6.8 Rate Regulations (Cont'd)

6.8.7 Toll Free Data Base Access Service (T)

For each end office a ratio will be developed and applied against the total minutes of use and/or count of queries for a given customer as determined by the tandem or SSP. These ratios will be developed by dividing the unidentified originating 800 series minutes of use at an end office by the total unidentified originating minutes of use in all end offices subtending the tandem or SSP. For example, assume: (T)

- Three end office (EO-1, EO-2, and EO-3) subtend a tandem (T)

  EO-1 measures 2,000 minutes of 800 series use (T)

  EO-2 measures 3,000 minutes of 800 series use (T)

  EO-3 measures 5,000 minutes of 800 series use

  10,000 TOTAL

- The tandem delivers 800 series usage to two customers (T)

  IC-A has 4,000 minutes of use

  IC-B has 6,000 minutes of use

- The allocation ratio for EO-1 is 20%

  2,000/10,000

- The minutes of use to be billed by EO-1 are:

  800 to IC-A (20% x 4,000)

  1,200 to IC-B (20% x 6,000)

  2,000 TOTAL

RECEIVED
JUL 23 1991
State of Alaska
Public Utilities Commission

ACCESS SERVICES

6. Switched Access Service (Cont'd)

6.9 Common Switching, Transport Termination and Interim NXX Optional Features (N)

Following are descriptions of the various optional features that are available in lieu of, or in the addition to, the standard features provided with the Feature Groups. They are provided as Common Switching, Transport Termination or Interim NXX Translation Options.

6.9.1 Common Switching Nonchargeable Optional Features

The following table shows the Feature Groups with which the optional features are available.

Option	Available Feature Groups A	B	C	D
A) Call Denial on Line or Hunt Group	X			
B) Service Code Denial on Line or Hunt Group	X			
C) Hunt Group Arrangement	X			
D) Uniform Call Distribution Arrangement	X			
E) Nonhunting Number for Use with Hunt Group or Uniform Call Distribution Arrangement	X			
F) Automatic Number Identification (ANI)		X	X	X
G) Up to 7 Digit Outpulsing of Access Digits to Customer		X		
H) Delay Dial Start-Pulsing Signaling			X	
I) Immediate Dial Pulse Address Signaling			X	
J) Dial Pulse Address Signaling			X	
K) Service Class Routing			X	X
L) Alternate Traffic Routing			X	X
M) Trunk Access Limitation			X	X
N) Call Gapping Arrangement				X
O) Band Advance Arrangement for Use with Special Access Service Utilized in the Provision of WATS or WATS-Type Services	X	X	X	X (N)

"Pursuant to Letter Order Dated 5/21/91"

Tariff Advice No. 4 Effective: May 21, 1991

Issued: 7/23/91
Issued By: Alaska Exchange Carriers Association, Inc.
By: [signature] Title: President

RECEIVED
JUN 21 2021
STATE OF ALASKA
REGULATORY COMMISSION OF ALASKA

ACCESS SERVICES

6. Switched Access Service (Cont'd)

6.9 Common Switching, Transport Termination and Interim NXX Optional Features (Cont'd)

6.9.1 Common Switching Nonchargeable Optional Features (Cont'd)

Option	Available Feature Groups A	B	C	D
P. End Office End User Line Service Screening for Use with Special Access Service Utilized in the Provision of WATS or WATS-Type Services			X	X
Q. Hunt Group Arrangement for Use with Special Access Service Utilized in the Provision of WATS and WATS-Type Services	X	X	X	X
R. Uniform Call Distribution Arrangement for Use with Special Access Service Utilized in the Provision of WATS and WATS-Type Services	X	X	X	X
S. Nonhunting Number Associated with Hunt Group Arrangement or Uniform Call Distribution Arrangement for Use with Special Access Service Utilized in the Provision of WATS and WATS-Type Services	X	X	X	X
T. Digital Switched 56 Service				X

A. Call Denial on Line or Hunt Group

This option allows for the screening of terminating Feature Group A calls. There are two screening arrangements available with this option as follows: 1) limiting terminating calls for completion to only 411 or 555-1212 whichever is available, 611, 911, Toll Free and a Telephone Company specified set of NXXs within the Telephone Company local exchange calling area of the dial tone office in which the arrangement is provided or, 2) limiting terminating calls to completion to only the NXXs associated with all end offices in the local calling area, i.e., (T)

RECEIVED
JUN 21 2021
STATE OF ALASKA
REGULATORY COMMISSION OF ALASKA

ACCESS SERVICES

6. Switched Access Service (Cont'd)

6.9 Common Switching, Transport Termination and Interim NXX Optional Features (Cont'd)

6.9.1 Common Switching Nonchargeable Optional Features (Cont'd)

A. Call Denial on Line or Hunt Group (Cont'd)

the call cannot be further switched or routed out of the local calling area nor will calls be completed to 411 or 555-1212 whichever is available, 611, 911, or Toll Free. All other calls are routed to a reorder tone or recorded announcement. Arrangement 1 is provided in all Telephone Company electronic end offices and, where available, in electromechanical end office. Arrangement 2 is provided where available. This feature is available with Feature Group A. (T)

B. Service Code on Line or Hunt Group

This option allows for the screening of terminating calls within the local calling area, and for disallowing completion of calls to)-, 555, and N11 (e.g., 411, 611, and 911). This feature is provided where available in all Telephone Company end offices. It is available with Feature Group A.

C. Hunt Group Arrangement

This option provides the ability to sequentially access one of two or more line side connections in the originating direction when the access code of the line group is dialed. This feature is provided in all Telephone Company end offices. It is available with Feature Group A. All Feature Group A access services in the same hunt group must provide off-hook supervisory

RECEIVED
JUL 23 1991
State of Alaska
Public Utilities Commission

ACCESS SERVICES

6. Switched Access Service (Cont'd)

6.9 Common Switching, Transport Termination and Interim NXX Optional Features (Cont'd) (N)

6.9.1 Common Switching Nonchargeable Optional Features (Cont'd)

signaling from the same point in time in the call sequence, i.e., all off-hook supervisory signals must either be provided by the customer's equipment before the called party answers or all must be forwarded by the customer's equipment when the called party answers.

D. Uniform Call Distribution Arrangement

This option provides a type of multiline hunting arrangement which provides for an even distribution of calls among the available lines in a hunt group. Where available, this feature is provided in Telephone Company electronic end offices only. It is available with Feature Group A.

E. Nonhunting Number for Use with Hunt Group or Uniform Call Distribution Arrangement

This option provides access to an individual line within a multiline hunt or uniform call distribution group. When the nonhunting number is dialed, access is provided when it is idle, or busy tone is provided when it is busy. Where available, this feature is provided in Telephone Company electronic end offices only. It is available with Feature Group A.

F. Automatic Number Identification (ANI)

1. This option provides the automatic transmission of a seven digit or ten digit number and information digits to the customer designated premises for (N)

"Pursuant to Letter Order dated 5/21/91

Tariff Advice No. 4

Issued: 7/23/91 Effective May 21, 1991
Issued By: Alaska Exchange Carriers Association, Inc.
By: [signature] Title: President

RECEIVED
JUL 23 1991
State of Alaska
Public Utilities Commission

ACCESS SERVICES

6. Switched Access Service (Cont'd)

6.9 Common Switching, Transport Termination and Interim NXX Optional Features (Cont'd) (N)

6.9.1 Common Switching Nonchargeable Optional Features (Cont'd)

F. Automatic Number Identification (ANI) (Cont'd)

originating calls to identify the calling station. The ANI feature is an end office software function which is associated on a call-by-call basis with:

a. all individual transmission paths in a trunk group routed directly between an end office and a customer designated premises or, where technically feasible, with

b. all individual transmission paths in a trunk group between an end office and an access tandem, and a trunk group between an access tandem and a customer designated premises.

2. The seven digit ANI telephone number is generally available with Feature Groups B and C. With these Feature Groups, technical limitations may exist in Telephone Company switching facilities which require ANI to be provided only on a directly trunked basis. ANI will be transmitted on all calls except those originating from multiparty lines, coin stations and coinless pay telephones using Feature Group B, or when an ANI failure has occurred.

3. The ten digit ANI telephone number is only available with Feature Group D. The ten digit ANI telephone number consists of the Number Plan Area (NPA) plus the seven digit ANI telephone number. The ten digit

"Pursuant to Letter Order dated 5/21/91." (N)

RECEIVED
JUN 21 2021
STATE OF ALASKA
REGULATORY COMMISSION OF ALASKA

ACCESS SERVICES

6. Switched Access Service (Cont'd)

6.9 Common Switching, Transport Termination and Interim NXX Optional Features (Cont'd)

6.9.1 Common Switching Nonchargeable Optional Features (Cont'd)

F. Automatic Number Identification (ANI) (Cont'd)

ANI telephone number will be transmitted on all calls except those identified as multiparty line or ANI failure, in which case only the NPA will be transmitted (in addition to the information digit described below).

4. With Feature Group C, at the option of the customer, ANI may be ordered from end offices where Telephone Company recording for end user billing is not provided. Additionally, ANI is provided from end offices where message detail recording is not required by the Telephone Company; as with Toll Free service. ANI is not provided from end offices where the Telephone Company forwards ANI to its recording equipment. (T)

5. Where ANI detail cannot be provided, e.g., on calls from 4 and 8 party services, information digits will be provided to the customer.

   The information digits identify:

   a. telephone number is the station billion number - no special treatment required,

   b. multiparty line-telephone is a 4- or 8- party line and cannot be identified - number must be obtained via an operator or in some other manner,

RECEIVED
JUL 23 1991
State of Alaska
Public Utilities Commission

ACCESS SERVICES

6. Switched Access Service (Cont'd)

6.9 Common Switching, Transport Termination and Interim NXX Optional Features (Cont'd) (N)

6.9.1 Common Switching Nonchargeable Optional Features (Cont'd)

F. Automatic Number Identification (ANI) (Cont'd)

5. (Cont'd)

c. ANI failure has occurred in the end office switch prevents identification of calling telephone number - must be obtained by operator or in some other manner,

d. hotel/motel originated call which requires room number identification,

e. coinless station, hospital, inmate, etc. call which requires special screening or handling by the customer, and

f. call is an Automatic Identified Outward Dialed (AIOD) call from customer premises equipment. The AIOD ANI telephone number is the listed telephone number of the customer and is not the telephone number of the calling party.

These ANI information digits are generally available with Feature Groups B, C, and D.

6. Additional ANI information digits are available with Feature Group D also. They include:

a. Inter local calling area restricted - telephone number is identified line

(N)

"Pursuant to Letter Order dated 5/21/91."

Tariff Advice No. 4

RECEIVED
APR - 4 1996
State of Alaska
Public Utilities Commission

ACCESS SERVICES

6. Switched Access Service (Cont'd)

6.9 Common Switching, Transport Termination and Interim NXX Optional Features (Cont'd)

6.9.1 Common Switching Nonchargeable Optional Features (Cont'd)

F. Automatic Number Identification (ANI) (Cont'd)

6. (Cont'd)

b. Inter local calling area restricted - hotel/motel line

c. Inter local calling area restricted - coinless, hospital, inmate, etc., line

These information digits will be transmitted as agreed to by the customer and the Telephone Company.

7. Restrictions on Use and Sale of ANI (N)

a. Intrastate access customers of this tariff may use ANI in the following manner:

(1) For billing and collection information, for routing, screening, and completing the originating subscriber's call or transaction, or for services directly related to the originating telephone subscriber's call or transaction.

The customer may use ANI to offer a product or service that is directly related to the products or services previously acquired from the customer by the originating subscriber. (N)
(L)

(L)

(L) Text relocated to Original Sheet No. 152.7.2.

Tariff Advice No. 30 Effective: June 14, 1996

Issued: _____
Issued By: Alaska Exchange Carriers Association, Inc.
By: Ruth A. Steele Title: President

RECEIVED
JUN 12 1996
State of Alaska
Public Utilities Commission

TELEPHONE EXCHANGE CARRIERS OF ALASKA

ACCESS SERVICES

6. Switched Access Service (Cont'd)

6.9 Common Switching, Transport Termination and Interim NXX Optional Features (Cont'd)

6.9.1 Common Switching Nonchargeable Optional Features (Cont'd)

7. Restrictions on Use and Sale of ANI (Cont'd) (N)

b. Intrastate access customers of this tariff that provide ANI on intrastate calls to any person shall provide such services through a contract or tariff containing telephone subscriber information that sets forth the restrictions on the use and sale of ANI as described in Section 6.9.1 F. 7(c)

c. Intrastate access customers of this tariff and any person provided ANI on intrastate calls through a contract or tariff with such intrastate access customer may not use ANI in the following manner:

(1) Reusing or selling the telephone number or billing information without notifying the originating telephone subscriber and obtaining the consent of such subscriber for such reuse or sale.

(2) Disclosing any information derived from the automatic number identification for any purpose other than performing the services or transactions that are the subject of the originating telephone subscriber's call; ensuring network performance security; compiling, using and disclosing aggregate information; and complying with applicable law or legal process. (N)

RECEIVED
APR -4 1996
State of Alaska
Public Utilities Commission

TELEPHONE EXCHANGE CARRIERS OF ALASKA

ACCESS SERVICES

6. Switched Access Service (Cont'd)

6.9 Common Switching, Transport Termination and Interim NXX Optional Features (Cont'd)

6.9.1 Common Switching Nonchargeable Optional Features (Cont'd)

G. Up to 7 Digit Outpulsing of Access Digits to Customer (L)

This option provides for the end office capability of providing up to 7 digits of the uniform access code (950-1/OXXX) to customer designated premises. The Customer can request that only some of the digits in the access code be forwarded. The access code digits would be provided to the customer designated premises using multi-frequency signaling and transmission of the digits would precede the forwarding of ANI if that feature were provided. This feature is available with Feature Group B. (L)

(L) Text relocated from Original Sheet No. 152.7.

RECEIVED
JUL 23 1991
State of Alaska
Public Utilities Commission

ACCESS SERVICES

6. Switched Access Service (Cont'd)

6.9 Common Switching, Transport Termination and Interim NXX Optional Features (Cont'd) (N)

6.9.1 Common Switching Nonchargeable Optional Features (Cont'd)

H. Delay Dial Start-Pulsing Signaling

Where available, this option provides a method of indicating to the near end trunk circuit readiness to accept address signaling information by the far end trunk circuit. Delay dial is often referred to as an off-hook, on-hook signaling sequence. The delay dial signal is the off-hook interval and the start-pulsing signal is the on-hook interval. With integrity check, the calling office will not outpulse until a delay dial (off-hook) signal followed by a start-pulsing (on-hook) signal has been identified at the calling office. This option is available with Feature Group C.

I. Immediate Dial Pulse Address Signaling

Where available, this option provides for the forwarding of dial pulses from the Telephone Company end office to the customer without the need of a start-pulsing signal from the customer. It is available with Feature Group C.

J. Dial Pulse Address Signaling

Where available, this trunk side option provides for the transmission of number information, e.g., called number, between the end office switching system and the customer designated premises (in either direction) by means of direct current pulses. It is available with Feature Group C.

(N)

"Pursuant to Letter Order dated 5/21/91."

Tariff Advice No. 4

Issued: 7/23/91 Effective May 21, 1991
Issued By: Alaska Exchange Carriers Association, Inc.
By: [signature] Title: President

RECEIVED
JUN 21 2021
STATE OF ALASKA
REGULATORY COMMISSION OF ALASKA

ACCESS SERVICES

6. Switched Access Service (Cont'd)

6.9 Common Switching, Transport Termination and Interim NXX Optional Features (Cont'd)

6.9.1 Common Switching Nonchargeable Optional Features (Cont'd)

K. Service Class Routing

This option provides the capability of directing originating traffic from an end office to a trunk group to a customer designated premises, based on the line class of service (e.g., coin, multiparty or hotel/motel), service prefix indicator (e.g., -0, 0+, 01+, or 011+) or Service Access Code (e.g., 800 series or 900). It is provided in suitably equipped end office or access tandem switches. It is available with Feature Groups C and D. (T)

L. Alternate Traffic Routing

This option provides the capability of directing originating traffic from an end office (or appropriately equipped access tandem) to a trunk group (the "high usage" group) to a customer designated premises until that group is fully loaded, and then delivering additional originating traffic (the "overflowing" traffic) from the same end office or access tandem to a different trunk group (the "final" group) to a second customer designated premises. The customer shall specify the last trunk CCS desired for the high usage group. It is provided in suitably equipped end office or access tandem switches. It is available with Feature Groups C and D.

RECEIVED
JUN 26 1991
State of Alaska
Public Utilities Commission

ACCESS SERVICES

6. Switched Access Service (Cont'd)

6.9 Common Switching, Transport Termination and Interim NXX Optional Features (N)

6.9.1 Common Switching Nonchargeable Optional Features (Cont'd)

M. Trunk Access Limitation

This option provides for the routing of originating 900 service calls to a specified number of transmission paths in a trunk group, in order to limit (choke) the completion of such traffic to the customer. Calls to the designated service which could not be completed over the subset of transmission paths of the trunk group, i.e., the choked calls, would be routed to reorder tone. It is provided in all Telephone Company electronic end offices and where available in electromechanical end offices. It is available with Feature Groups C and D.

N. Call Gapping Arrangement

This option, provided in suitably equipped end office switches, provides for the routing of originating calls to 900 service to be switched in the end office to all transmission paths in a trunk group at a prescribed rate of flow, e.g., one call every five seconds, in order to limit (choke) the completion of such traffic to the customer. Calls to the designated service which are denied access by this feature, i.e., the choked calls, would be routed to a no-circuit announcement. It is provided in selected Feature Group D equipped end office and is available only with Feature Group D. (N)

"Pursuant to Letter Order dated 5/21/91."

Tariff Advice No. 4

Issued: 6/26/91 Effective May 21, 1991
Issued By: Alaska Exchange Carriers Association, Inc.
By: [signature] Title: President

RECEIVED
JUL 23 1991
State of Alaska
Public Utilities Commission

ACCESS SERVICES

6. Switched Access Service (Cont'd)

6.9 Common Switching, Transport Termination and Interim NXX Optional Features (Cont'd) (N)

6.9.1 Common Switching Nonchargeable Optional Features (Cont'd)

O. Band Advance Arrangement for Use with Special Access Service Utilized in the Provision of WATS or WATS-Type Services

This option, which is provided in association with two or more Special Access Service groups, provides for the automatic overflow of terminating calls to a second Special Access Service group, when the first group has exceeded its call capacity. This option is available with Feature Groups A, B, C, and D.

P. End Office User Line Service Screening for Use with Special Access Service Utilized in the Provision of WATS or WATS-Type Services

This option provides the ability to verify that an end user has dialed a called party address (by screening the called NPA and/or NXX on the basis of geographical bands selected by the Telephone Company) which is in accordance with that end user's service agreement with the customer, e.g., WATS. This option is provided in all Telephone Company electronic end offices and, where available, in electromechanical end offices, which are designated as WATS Serving Offices. It is available with Feature Groups C and D.

(N)

"Pursuant to Letter Order dated 5/21/91."

Tariff Advice No. 4

Issued: 7/23/91 Effective May 21, 1991
Issued By: Alaska Exchange Carriers Association, Inc.
By: [signature] Title: President

RECEIVED
JUN 21 2021
STATE OF ALASKA
REGULATORY COMMISSION OF ALASKA

ACCESS SERVICES

6. Switched Access Service (Cont'd)

6.9 Common Switching, Transport Termination and Interim NXX Optional Features (Cont'd)

6.9.1 Common Switching Nonchargeable Optional Features (Cont'd)

Q. Hunt Group Arrangement for Use with Special Access Service Utilized in the Provision of WATS or WATS-Type Services

This option provides the ability to sequentially access one or two or more Special Access Services utilized in the provision of WATS services (e.g., 800 series Service Special Access services) in the terminating direction, when the hunting number of the Special Access Service group is forwarded from the customer to the Telephone Company. This feature is provided in all Telephone Company designated WATS Service Offices. It is available with Feature Groups A, B, C, and D. (T)

R. Uniform Call distribution Arrangement of Use with Special Access Service Utilized in the Provision of WATS or WATS-Type Services

This option provides a type of multiline hunting arrangement which provides for an even distribution of terminating calls among the available Special Access Services utilized in the provision of WATS or WATS-Type Services in the hunt group. Where available, this feature is only provided in Telephone Company designated WATS Serving Offices. It is available with Feature Groups A, B, C, and D.

RECEIVED
OCT 29 1992
State of Alaska
Public Utilities Commission

ACCESS SERVICES

6. Switched Access Service (Cont'd)

6.9 Common Switching, Transport Termination and Interim NXX Optional Features (Cont'd)

6.9.1 Common Switching Nonchargeable Optional Features (Cont'd)

S. Nonhunting Number Associated with Hunt Group Arrangement or Uniform Call Distribution Arrangements for Use with Special Access Service Utilized in the Provision of WATS or WATS-Type Services

This option provides an arrangement, for an individual Special Access Service Utilized in the provision of WATS or WATS-Type Services within a multiline hunt or uniform call distribution group, that provides access to that Special Access Service within the hunt or uniform call distribution group, when it is idle or provides busy tone when it is busy, when the nonhunting number s dialed, without hunting to the next idle number. Where available, this feature is only provided in Telephone Company designated WATS Servicing Offices. It is available with Feature Groups A, B, C, and D.

T. Digital Switched 56 Service (N)

This option provides for a connection between a customer's premise and a suitable equipped end user's premise which uses end office switching and facilities capable of transmitting digital data up to 56 Kilobits per second. Digital Switched 56 Service is only available in appropriately provisioned Feature Group D offices. (N)

RECEIVED
JUL 23 1991
State of Alaska
Public Utilities Commission

ACCESS SERVICES

6. Switched Access Service (Cont'd)

6.9 Common Switching, Transport Termination and Interim NXX Optional Features (Cont'd) (N)

6.9.2 Transport Termination Nonchargeable Optional Features

A. Rotary Dial Station Signaling

This option provides for the transmission of called party address signaling from rotary dial stations to the customer designated premises for originating calls. This option is provided in the form of a specific type of Transport Termination. It is available with Feature Group B, only on a directly trunked basis.

B. Operator Trunk - Coin, Non-Coin, or Combined Coin and Non-Coin

This option may be ordered to provide coin, non-coin, or combined coin and non-coin operation. It is available only with Feature Group C and is provided in electronic end offices and other Telephone Company end offices where equipment is available. It is provided as a trunk type of Transport Termination.

1. Coin, Non-Coin:

This arrangement provides for initial coin return control, except in the case of non-coin, and routing of 0+, 0-, 1+, 01+ or 011+ prefixed originating coin and non-coin calls requiring operator assistance to the customer designated premises. (N)

"Pursuant to Letter Order dated 5/21/91."

Tariff Advice No. 4

Issued: 7/23/91 Effective May 21, 1991
Issued By: Alaska Exchange Carriers Association, Inc.
By: [signature] Title: President

RECEIVED
JUL 23 1991
State of Alaska
Public Utilities Commission

ACCESS SERVICES

6. Switched Access Service (Cont'd)

6.9 Common Switching, Transport Termination and Interim NXX Optional Features (Cont'd) (N)

6.9.2 Transport Termination Nonchargeable Optional Features (Cont'd)

B. Operator Trunk - Coin, Non-Coin, or Combined Coin and Non-Coin (Cont'd)

Because operator assisted coin calling traffic is routed over a trunk group dedicated to operator assisted calls, this arrangement is only provided in association with the Service Class Routing option. This arrangement is normally ordered by the customer in conjunction with the ANI optional feature, since the preponderance of trunk groups equipped with this arrangement will be terminated in the customer's automated operator services system, rather than in the customer's manual cord boards.

2. Combined Coin and Non-Coin

When so equipped, the ANI optional feature provides for the forwarding of information digits which identify that the call has originated from a hotel or motel, and whether room number identification is required, or that special screening is required, e.g., for coinless public stations, dormitory or inmate stations, or other screening arrangements agreed to between the customer and the Telephone Company.

(N)

"Pursuant to Letter Order dated 5/21/91."

Tariff Advice No. 4

Issued: 7/23/91 Effective May 21, 1991
Issued By: Alaska Exchange Carriers Association, Inc.
By: [signature] Title: President

RECEIVED
APR 21 1993
State of Alaska
Public Utilities Commission

ACCESS SERVICES

6. Switched Access Service (Cont'd)

6.9 Common Switching, Transport Termination and Interim NXX Optional Features (Cont'd)

6.9.2 Transport Termination Nonchargeable Optional Features (Cont'd)

C. Operator Trunk - Full Feature

This option provides the initial coin return control function to the customer's operator. It is available with Feature Group D and is provided as a trunk type of Transport Termination.

6.9.3 Chargeable Optional Features

A. Interim NXX Translation

This service is an originating offering utilizing trunk side Switched Access Service and provides a customer identification function based on the dialed SAC and NXX code.

For example, when a 1+900+NXX-XXXX call is originated by an end user, the Telephone Company will perform the customer identification function based on the dialed digits to determine the customer location to which the call is to be routed. If the call originates from an end office switch not equipped to provide the customer identification function, the call will be routed to an office at which the function is available. Once customer identification has been established, the call will be routed to that customer. Calls originating from an end office switch at which the customer identification function is performed, but to which the customer has not ordered Interim (D)

RECEIVED
JUN 21 2021
STATE OF ALASKA
REGULATORY COMMISSION OF ALASKA

ACCESS SERVICES

6. Switched Access Service (Cont'd)

6.9 Common Switching, Transport Termination and Interim NXX Optional Features (Cont'd)

6.9.3 Chargeable Optional Features (Cont'd)

A. Interim NXX Translation (Cont'd)

NXX Translation, will be blocked. Calls to a 900 number from coin telephones, 0+, 0-, 10XXX, Inmate Service, Hotel/Motel Service and calling card calls will be blocked. The manner in which Interim NXX Translation is provided is dependent on the status of the end office from which the service is provided (i.e., equipped with equal access capabilities or not equipped with equal access capabilities). When Interim NXX Translation is provided from an end office not equipped with equal access capabilities, it will be provided in conjunction with FGC Switched Access Service.

B. Toll Free Data Base Access Service (T)

Toll Free Data Base Access Service is provided with FGC or FGD switched access service. When a 1+800 series+NXX-XXXX call is originated by an end user, the Telephone Company will utilize the Signalling System 7 (SS7) network to query a Toll Free data base to perform the identification function. The call will then be routed to the identified customer over FGC or FGD switched access. The 800 series includes the following service access codes: 800, 888, 877, 866, 855, 844, 833 and 822. (N)

RECEIVED
December 6, 2024
STATE OF ALASKA
REGULATORY COMMISSION OF ALASKA

ACCESS SERVICES

6. Switched Access Service (Cont'd)

6.9 Common Switching, Transport Termination and Interim NXX Optional Features (Cont'd)

6.9.3 Chargeable Optional Features (Cont'd)

B. Toll Free Data Base Access Service (Cont'd)

The manner in which Toll Free data base access service is provided is dependent on the availability of SS7 service at the end office from which the service is provided as outlined following:

- When Toll Free data base access service originates at an end office equipped with Service Switching Point (SSP) capability for querying centralized data bases, all such service will be provisioned from that end office.
- When Toll Free data base access service originates at an end office not equipped with SSP customer identification capability, the 800 series call will be delivered to the access tandem on which the end office is homed and which is equipped with the SSP feature to query centralized data bases.
- When Toll Free data base access service originates at an end office not equipped with SSP customer identification capability and the access tandem on which the end office is homed is not equipped with the SSP feature, or the end office is not homed to an access tandem, the Telephone Company will make special arrangements to query centralized data bases.

Query charges as set forth in 13.2.2(H) following are in addition to those charges applicable for the Feature Group C or Feature Group D switched access service. Only one query charge per call may be assessed. (T)

C. Real Time Class of Service/Quality of Service (ESALT RT CoS/QoS)

Where suitable facilities exist, the EASLT RT CoS/QoS option will be available for use on an ESALT Direct Trunked Facility (DTF). This optional arrangement is available only on that portion of the ESALT DTF provided by the Telephone Company within it operating territory. The ESALT RT CoS/QoS option is not available for use with jointly provided ESALT.

RECEIVED
MAY 01 2015
STATE OF ALASKA
REGULATORY COMMISSION OF ALASKA

6. Switched Access Service (Cont'd)

6.9 Common Switching, Transport Termination and Interim NXX Optional Features (Cont'd)

6.9.3 Chargeable Optional Features (Cont'd)

C. Real Time Class of Service/Quality of Service (ESALT RT CoS/QoS) (Cont'd)

When ordered by the customer, the Telephone Company's network will transport the customer's traffic across its network to meet the frame delay, inter frame dely variation and dram loss ratio parameters specified in the following Technical References:

- IEEE Standard 802.1D-2004, Sections 7, 9, 17 and Annex G provided the customer's CPE populates the user priority value field with a value of 6 and
- Implementation Agreement MEF 23.1, January 2012, Table 7, Label H, Regional Performance Tier.

The capacity ordered for the ESALT RT CoS/QoS option must be equal to the full capacity of the associated ESALT DTF.

When one or more of the ESALT RT CoS/QoS performance criteria specified in the Technical References listed above is not met, the customer reports the performance failure to the Telephone Company and the performance failure does not result in a service interruption of the customer's ESALT, the following provisions will apply in lieu of the credit allowance provisions for service interruptions specified in Section 2.4.3, preceding.

- No credit will be applied for the performance failure when the Telephone Company restores the customer's service to the required ESALT RT CoS/QoS performance criteria levels within four hours after receipt of the trouble report from the customer or when the Telephone Company determines during its trouble investigation that the customer's equipment caused the performance failure.

RECEIVED
MAY 01 2015
STATE OF ALASKA
REGULATORY COMMISSION OF ALASKA

6. Switched Access Service (Cont'd)

6.9 Common Switching, Transport Termination and Interim NXX Optional Features (Cont'd)

6.9.3 Chargeable Optional Features (Cont'd)

C. Real Time Class of Service/Quality of Service (ESALT RT CoS/QoS) (Cont'd)

- When the Telephone Company fails to restore the customer's service to the required ESALT RT CoS/QoS performance criteria levels within four hours after receipt of the trouble report and the trouble is found to be in the Telephone Company's network, the Telephone Company will provide the customer with a service credit equal to 144/1440 of the undiscounted monthly charges for the impacted ESALT DTF(s) and associated ESALT RT CoS/QoS option(s) for the initial four hour period and for each subsequent fractional four hour period until the performance failure is resolved. The total service credits due under this provision during a single billing month may not exceed the total undiscounted monthly charges for the impacted ESALT DTF(s) and associated ESALT RT CoS/QoS option(s).

A capacity based monthly recurring charge (i.e., 2 Mbps, 10 Mbps or 50 Mbps) applies to each ESALT RT CoS/QoS option ordered by the customer in addition to the applicable charges for the associated ESALT DTF. Charges for the ESALT RT CoS/QoS option are as specified in Section 14, following. An Access Order Charge applies to subsequently add the ESALT RT CoS/QoS option to an existing ESALT DTF. The Access Order Charge does not apply to remove the ESALT RT CoS/QoS option.

The Telephone Company specific rate band assignment for the ESALT RT CoS/QoS option is specified in the Local Transport (LT) column in National Exchange Carrier Association Tariff F.C.C. No. 5, Section 17.5.1.

RECEIVED
MAY 01 2015
STATE OF ALASKA
REGULATORY COMMISSION OF ALASKA

6. Switched Access Service (Cont'd)

6.9 Common Switching, Transport Termination and Interim NXX Optional Features (Cont'd)

6.9.3 Chargeable Optional Features (Cont'd)

D. Entrance Facility Protection (ESALT EFP)

Where suitable facilities exist, an ESALT customer that requires stand-by capability on its ESALT Entrance Facility (EF) may order the ESALT EFP option.

This optional arrangement establishes a stand-by ESALT EF between the customer designated premises and the Telephone Company's suitably equipped serving wire center at the same bandwidth capacity as the customer's ESALT EF, which will be activated to restore service should a failure occur in the customer's ESALT EF. ESALT EFP is not available when the ESALT EF is used in conjunction with mixed use.

When ordered by the customer, the Telephone Company's network will automatically redirect the customer's IP formatted traffic to the stand-by ESALT EF as described in Technical Reference IEEE Standard 802.1D-2004, Section 14, following.

A capacity based monthly recurring charge (i.e., 2 Mbps, 10 Mbps or 50 Mbps) and nonrecurring charge applies to each ESALT EFP option ordered by the customer in addition to the applicable charges for the associated ESALT EF. An Access Order Charge applies in addition to the ESALT EFP nonrecurring charge to subsequently add the ESALT EFP option to an existing ESALT EF. Charges for the ESALT EFP option are as specified in Section 14, following.

RECEIVED
APR 30 1997
ALASKA PUBLIC UTILITIES COMM.

ACCESS SERVICES

7. Special Access Service

7.1 General

Special Access Service provides a transmission path to connect customer designated premises, directly, through a Telephone Company hub or hubs where bridging or multiplexing functions are performed, or to connect a customer designated premises and a WATS Serving Office, or to connect a customer (C) designated premises to a Public Packet Data Network Service. (C) Special Access Service includes all exchange access not utilizing Telephone Company end office switches.

The connections provided by Special Access Service can be either analog or digital. Analog connections are differentiated by spectrum and bandwidth. Digital connections are differentiated by bit rate.

7.1.1 Channel Types

There are five types of channels used to provide Special Access Services. Each type has its own characteristics. All are subdivided by one or more of the following:

- Transmission specifications,
- Bandwidth,
- Speed (i.e., bit rate),
- Spectrum

Customers can order a basic channel and select from a list of those available transmission parameters and channel interfaces that they desire in order to meet specific communications requirements.

RECEIVED

JUN 1 1 2009

STATE OF ALASKA
REGULATORY COMMISSION OF ALASKA

ACCESS SERVICES

7. Special Access Service (Cont'd)

7.1 General (Cont'd)

7.1.1 Channel Types (Cont'd)

For purposes of ordering channels, each has been identified as a type of Special Access Service. However, such identification is not intended to limit a customer's use of the channel, nor to imply that the channel is limited to a particular use.

Following is a brief description of each type of channel:

Voice Grade - a channel for the transmission of analog signals within an approximate bandwidth of 300 to 3000 Hz.

Program Audio - a channel for the transmission of audio signals. The nominal frequency bandwidths are from 200 to 3500 Hz, from 100 to 5000 Hz, from 50 to 8000 Hz, or from 50 to 15000 Hz.

Video - a channel for the transmission of standard 525 line 60 field monochrome or National Television Systems Committee color video signal and one or two associated 5 or 15 kHz audio signals. The bandwidth is either 30 Hz to 4.5 MHz or 30 Hz to 6.6 MHz.

Digital Data - a channel for the digital transmission of synchronous serial data at rates of 2.4, 4.8, 9.6, 19.2, 56.0, or 64.0 Kbps.

High Capacity - a channel for the transmission of isochronous serial digital data at rates of 1.544, 3.152, 6.312, 44.736 or 274.176 Mbps.

Synchronous Optical – a high speed channel for the transmission of synchronous full duplex data over optical fiber at rates of 155.52 or 622.08 Mbps. (N)

Detailed descriptions of each of the channel types are provided in 7.4 through 7.9 following.

JUN 1 1 2009

STATE OF ALASKA
REGULATORY COMMISSION OF ALASKA

ACCESS SERVICES

7. Special Access Service (Cont'd)

7.1 General (Cont'd)

7.1.1 Channel Types (Cont'd)

The customer also has the option of ordering Voice Grade and High Capacity facilities (i.e., 1.544 Mbps, 3.152 Mbps, 6.312 Mbps, 44.736 Mbps and 274.176 Mbps) to Telephone Company hubs for multiplexing to individual channels of a lower capacity or bandwidth. Descriptions of the types of multiplexing available at the hubs, as well as the number of individual channels which may be derived from each type of facility are set forth in 7.2.5 following. Additionally, the customer may specify optional features for the individual channels derived from the facility to further tailor the channel to meet specific communications requirements. Descriptions of the optional features and functions available are set forth in 7.2.1 following.

For example, a customer may order a 3.152 Mbps High Capacity channel from a customer designated premises to a Telephone Company hub for multiplexing to two 1.544 Mbps channels. The 1.544 Mbps channels may be further multiplexed at the same or a different hub to Voice Grade channels or may be extended to other customer designated premises or hubs. Optional features may be added to either the 1.544 Mbps or the Voice Grade channels.

Similarly, the customer has the option of ordering Synchronous Optical Channel Service to a wire center equipped for Add/Drop Multiplexing. This allows lower level signals to be added or dropped from a high speed optical carrier channel for delivery to a customer designated premises, WATS office, Public Packet Data Network Service, or another wire center. A description of Add/Drop Multiplexing is set forth in Section 7.9.3, following. (N)

7.1.2 Service Descriptions

For the purposes of ordering, there are six categories of Special Access Service. These are:

	Service Designator Codes	
Voice	VG	
Program Audio	AP	
Video	TV	
Digital	DA	
High Capacity	HC	
Synchronous Optical	OC	(N)

RECEIVED
NOV 21 1990
State of Alaska
Public Utilities Commission

ACCESS SERVICES

7. Special Access Service (Cont'd)

7.1 General (Cont'd)

7.1.2 Service Descriptions (Cont'd)

Each service consists of a basic channel to which a technical specifications package (customized or predefined), channel interface(s) and, when desired, optional features and functions are added to construct the service desired by the customer. Technical specifications packages are described in Section 11.2 following, optional features and functions are described in this section. Channel interfaces are described in 11.2 following.

Customized technical specifications packages will be provided where technically feasible. If the Telephone Company determines that the requested parameter specifications are not compatible, the customer will be advised and given the opportunity to change the order.

When a customized channel is ordered the customer will be notified whether Additional Engineering Charges apply. In such cases, the customer will be advised and given the opportunity to change the order.

The channel descriptions provided in 7.4 through 7.9 following, specify the characteristics of the basic channel and indicate whether the channel is provided between customer designated premises, between a customer designated premises and a Telephone Company hub where bridging or multiplexing functions are performed, between hubs, or between a customer designated premises and a WATS Serving Office.

Pursuant to Orders No. 6 & 7 in Docket U-90-26

RECEIVED

JUN 11 2009

STATE OF ALASKA
REGULATORY COMMISSION OF ALASKA

ACCESS SERVICES

7. Special Access Service (Cont'd)

7.1 General (Cont'd)

7.1.2 Service Descriptions (Cont'd)

A. Information pertaining to the technical specifications packages indicates the transmission parameters that are available with each package. This information is displayed in matrices set forth in 11.2 following.

B. Channel interfaces at each Point of Termination on a two-point service may be symmetrical or asymmetrical. On a multipoint service they may also be symmetrical or asymmetrical, but communications can only be provided between compatible channel interfaces. Only certain channel interfaces are compatible. These are set forth in 11.2 following, in a combination format.

C. Only certain channel interface combinations are available with the predefined technical specifications packages. These are delineated in the Technical References set forth in (F) following. When a customized channel is requested, all channel interface combinations available with the specified type of service are available with the customized channel.

D. The optional features and functions available with each type of Special Access Service are described in this section. The optional features and functions information also indicates with which technical specifications packages they are available. Such information is displayed in matrices set forth in 11.2 following with the optional feature or function listed down the left side and the technical specifications package listed across the top. (C)

E. The Telephone Company will maintain services installed prior to April 1, 1985, at their existing transmission specifications provided such performance specifications do not exceed the standards listed in this provision. Those services exceeding the standards listed will be maintained at the performance levels specified in this tariff.

RECEIVED

JUN 1 1 2009

STATE OF ALASKA
REGULATORY COMMISSION OF ALASKA

ACCESS SERVICES

7. Special Access Service (Cont'd)

7.1 General (Cont'd)

7.1.2 Service Descriptions (Cont'd)

F. All services installed after April 1, 1985 will conform to the transmission specifications standards contained in this tariff or in the following Technical References for each category of service:

Voice Grade	TR-NWT-000335 PUB 41004, Table 4	
Digital Data For 2.4,4.8,9.6&56.0 Kbps For 19.2 Kbps For 64.0 Kbps Program Audio Video High Capacity	TR-NWT-000341 PUB 62310 INC Bulletin CB-INC-100 GR-342-CORE GR-337-CORE GR-338-CORE GR-342-CORE GR-54-CORE PUB 41451	
Synchronous Optical For OC3, OC3c and OC12	GR-253-CORE GR-1374-CORE ANSI T1.105 ANSI T1.102	(N)

7.1.3 Service Configurations

There are three types of service configurations over which Special Access Services are provided: two-point service, multi-point service, and Synchronous Optical Channel Service. (T) (T)

A. Two-Point Service

A two-point service connects two customer designated premises, either on a directly connected basis or through a hub where multiplexing functions are performed, or a customer designated premises and a wire center equipped for Frame Relay Access Service, and a WATS Serving Office (WSO).

RECEIVED
NOV 21 1990
State of Alaska
Public Utilities Commission

TELEPHONE EXCHANGE CARRIERS OF ALASKA

ACCESS SERVICES

7. Special Access Service (Cont'd)

7.1 General (Cont'd)

7.1.3 Service Configurations (Cont'd)

Applicable rate elements are:
- Channel Terminations
- Channel Mileage (as applicable)
- Optional Features and Functions (when applicable)

A Special Access Surcharge, as set forth in 7.3 following, may be applicable.

The following diagram depicts a two-point Voice Grade service connecting two Customer Designated Premises (CDP). The service is provided with C-Type conditioning.

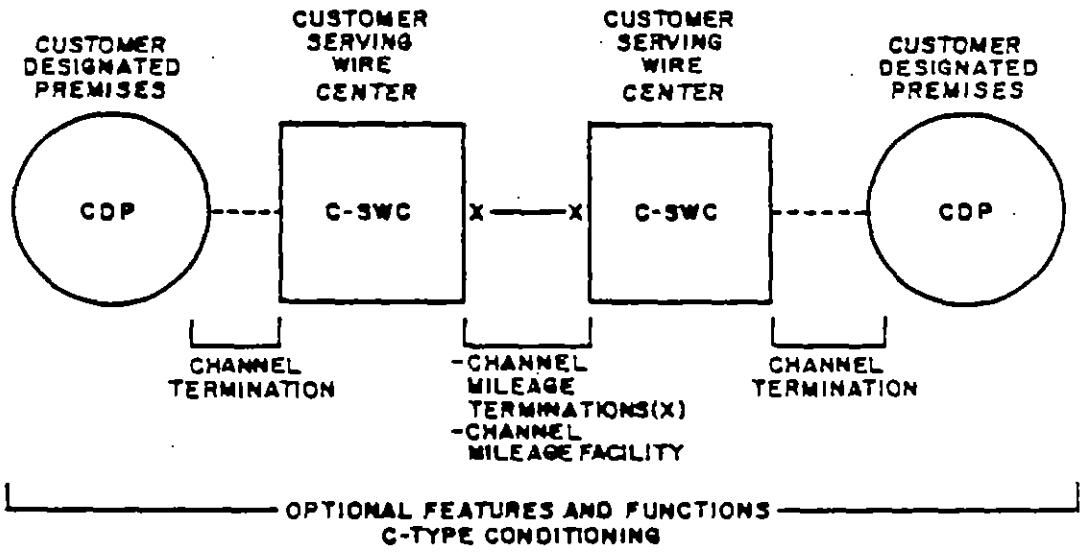

Applicable rate elements are:
- Channel Terminations (applicable one (1) per CDP)
- Channel Mileage
  - 2 Channel Mileage Terminations plus
  - 1 section, Channel Mileage Facility per mile
- C-Type Conditioning Optional Feature

Pursuant to Orders No. 6 & 7 in Docket U-90-26

RECEIVED
NOV 21 1990
State of Alaska
Public Utilities Commission

ACCESS SERVICES

7. Special Access Service (Cont'd)

7.1 General (Cont'd)

7.1.3 Service Configurations (Cont'd)

The following diagram depicts a two-point Voice Grade service connecting a customer designated premises to a WATS serving office.

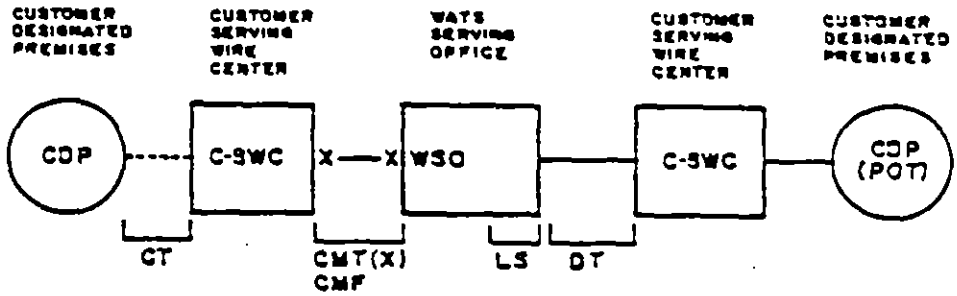

CT - Channel Termination
CMT - Channel Mileage Termination
CMF - Channel Mileage Facility
LS - Local Switching
DT - Dedicated Transport

Applicable rate elements for Special Access are:
- Channel Termination
- Channel Mileage
  - 2 Channel Mileage Terminations plus
  - 1 section, Channel Mileage Facility per mile
- Special Access Surcharge*

* May not apply if exemption certification is provided.

Pursuant to Orders No. 6 & 7 in Docket U-90-26

RECEIVED
NOV 21 1990
State of Alaska
Public Utilities Commission

ACCESS SERVICES

7. Special Access Service (Cont'd)

7.1 General (Cont'd)

7.1.3 Service Configurations (Cont'd)

B. Multipoint Service

Multipoint service connects three or more customer designated premises through one or more Telephone Company hubs. Only certain types of Special Access Service are provided as multipoint service. These are so designated in the descriptions for the appropriate channel.

The channel between hubs (i.e., bridging locations) on a multipoint service is a mid-link. There is no limitation on the number of mid-links available with a multipoint service. However, when more than three mid-links in tandem are provided the quality of the overall service may be degraded.

Multipoint service utilizing a customized technical specifications package, as set forth in 7.1.2 preceding and 11.2 following, will be provided when technically possible. If the Telephone Company determines that the requested characteristics for a multipoint service are not compatible, the customer will be advised and given the opportunity to change the order.

When ordering, the customer will specify the desired bridging hub(s). NATIONAL EXCHANGE CARRIER ASSOCIATION, INC. TARIFF FCC NO. 4 identifies serving wire centers, hub locations and the type of bridging functions available.

Applicable Rate Elements are:
- Channel Terminations (one per customer designated premises)
- Channel Mileage (as applicable between the serving wire center for each customer designated premises and the hub and between hubs).
- Bridging
- Additional Optional Features and Functions (when applicable).

RECEIVED

JUN 1 1 2009

STATE OF ALASKA
REGULATORY COMMISSION OF ALASKA

ACCESS SERVICES

7. Special Access Service (Cont'd)

7.1 General (Cont'd)

7.1.3 Service Configurations (Cont'd)

B. Multipoint Service (Cont'd) (T)

The Special Access Surcharge, as set forth in 7.3 following, may be applicable.

Example: Voice Grade multipoint service connecting four customer designated premises (CDP) via two customer specified bridging hubs.

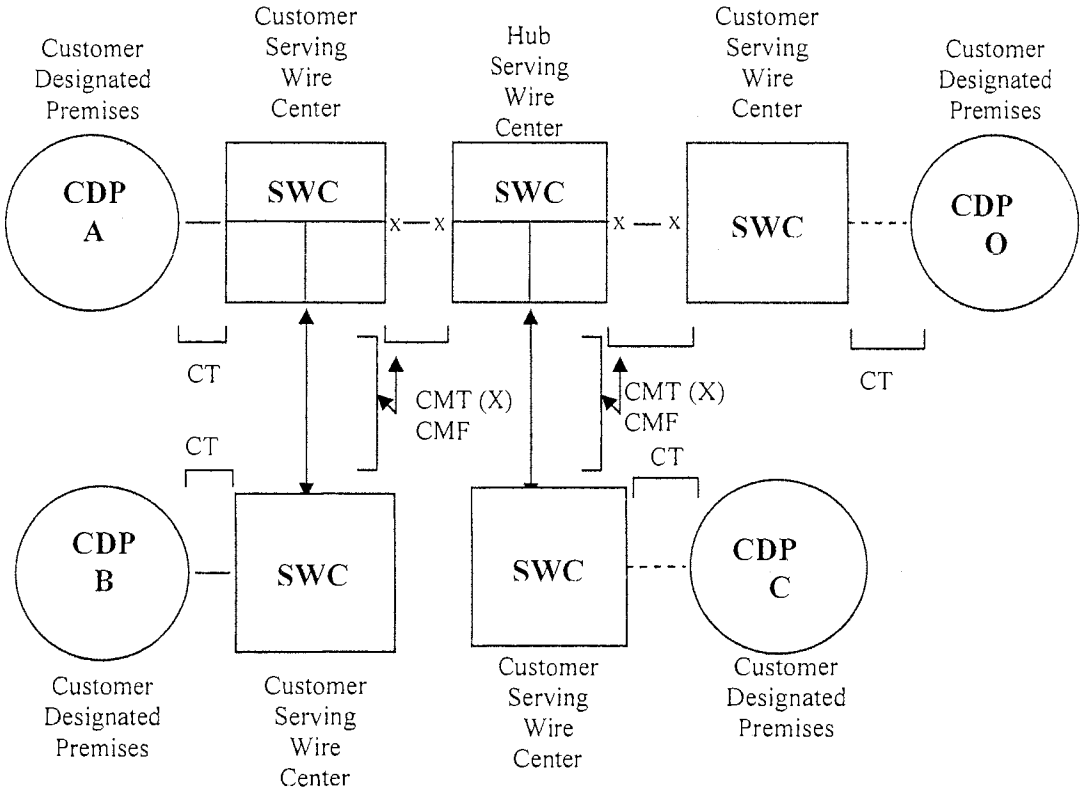

CT - Channel Termination
CMT - Channel Mileage Termination
CMF - Channel Mileage Facility
O - Bridging Port

Applicable Rate Elements are:

- Channel Terminations (4 applicable)
- Channel Mileage
  - 2 Channel Mileage Terminations per Channel Mileage Facility section for a total of 8 plus
  - 4 sections, Channel Mileage Facility per mile
- Bridging Optional Feature (6 applicable, i.e., each bridge port)

RECEIVED
JUN 2 5 2009
STATE OF ALASKA
REGULATORY COMMISSION OF ALASKA

7. Special Access Service (Cont'd)

7.1 General (Cont'd)

7.1.3 Service Configurations (Cont'd) (N)

C. Synchronous Optical Channel Service

A Synchronous Optical Channel Service connects two customer designated premises, or a customer designated premises and a wire center equipped for Add/Drop Multiplexing, or a customer designated premises and a wire center equipped with an Asynchronous Transfer Mode Cell Relay Access Service, or a customer designated premises and a wire center equipped with an Ethernet Transport Service. The connection is provided via a high speed optical carrier communications path delivering an optical handoff.

Applicable rate elements are:

- Channel Terminations
- Channel Mileage (where applicable)
- Optional Features and Functions (N)

RECEIVED
JUN 11 2009
STATE OF ALASKA
REGULATORY COMMISSION OF ALASKA

7. Special Access Service (Cont'd)

7.1 General (Cont'd)

7.1.3 Service Configurations (Cont'd) (N)

C. Synchronous Optical Channel Service (Cont'd)

1. The following diagram depicts a synchronous optical channel service connecting two Customer Designated Premises (CDP). The Optional Feature and Function of a Customer Node was ordered at one CDP.

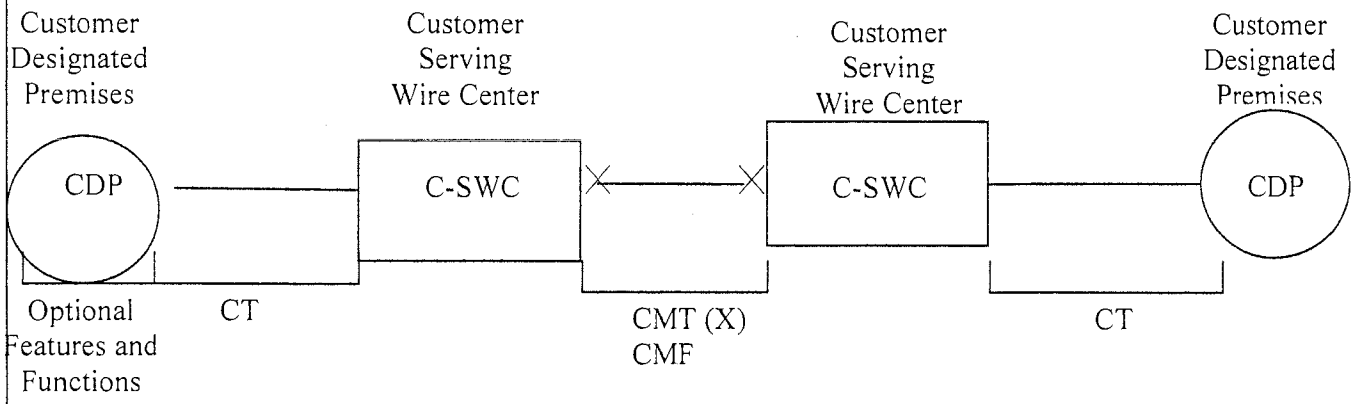

CT – Channel Termination
CMT – Channel Mileage Termination
CMF – Channel Mileage Facility
CN – Customer Node
• – Customer Premises Port

Applicable rate elements are:

- Channel Terminations
  2 Channel Terminations (1 per CDP)
- Channel Mileage
  2 Channel Mileage Terminations plus
  1 Segment Channel Mileage Facility (per mile)
- Optional Feature
  1 Customer Node, plus
  3 Customer Premises Ports (N)

RECEIVED
JUL 2 0 2009
STATE OF ALASKA
REGULATORY COMMISSION OF ALASKA

7. Special Access Service (Cont'd)

7.1 General (Cont'd)

7.1.3 Service Configurations (Cont'd)

C. Synchronous Optical Channel Service (Cont'd) (N)

2. The following diagram depicts a Synchronous Optical Channel Service connecting three Customer Designated Premises. CDP-A and CDP-B are connected using an Add/Drop Multiplexer. At the Add/Drop Multiplexer, the customer may drop off lower speed special access services. Rates and charges are as set forth in Section 14, following.

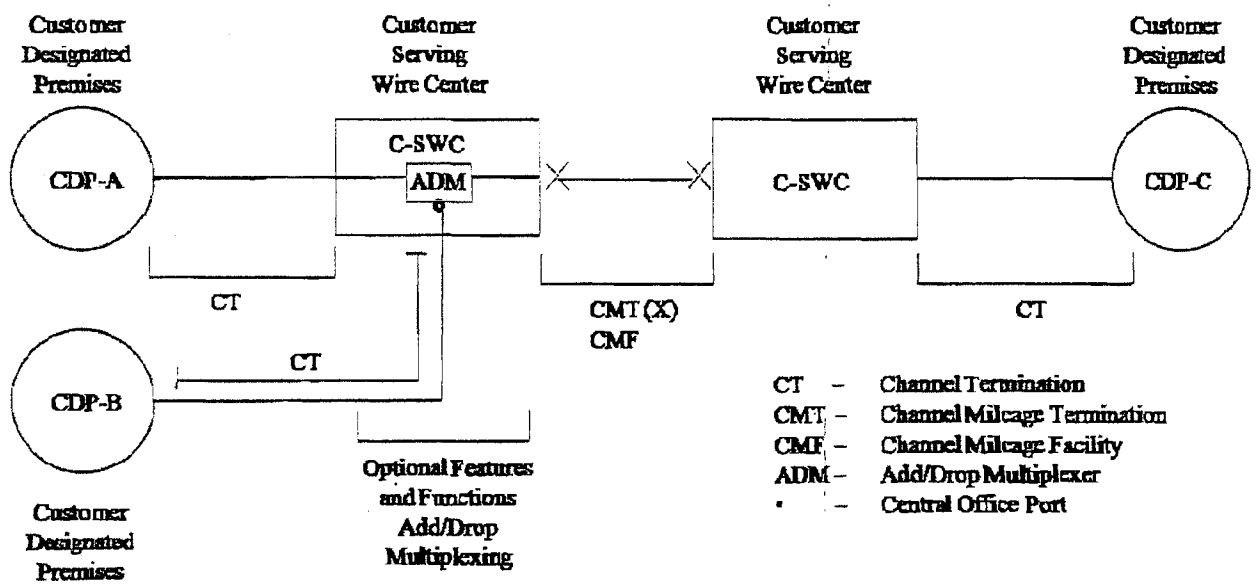

Applicable rate elements are:

- Channel Terminations (applicable one (1) per CDP)
- Channel Mileage
  Channel Mileage Terminations (2 applicable)
  1 Section, Channel Mileage Facility per mile
- Add/Drop Multiplexing Optional Feature
  (1 Central Office Port applicable, i.e., each port)

(N)

RECEIVED
NOV 21 1990
State of Alaska
Public Utilities Commission

ACCESS SERVICES

7. Special Access Service (Cont'd)

7.1 General (Cont'd)

7.1.4 Alternate Use

Alternate Use occurs when a service is arranged by the Telephone Company so that the customer can select different types of transmission at different times. A customer may use a service in any privately beneficial manner. However, where technical or engineering changes are required to effectuate an alternate use, the Telephone Company will make such special arrangements available on an individual case basis.

The arrangement required to transfer the service from one operation to the other (i.e., the transfer relay and control leads) will be rated and provided on an individual case basis. The customer will pay the stated tariff rates for the Access Service rate elements for the service ordered [i.e., Channel Terminations, Channel Mileage (as applicable) and Optional Features and Functions (if any)].

7.1.5 Special Facilities Routing

A customer may request that the facilities used to provide Special Access Service be specially routed. The regulations, rates and charges for Special Facilities Routing (i.e., Avoidance, Diversity and Cable-Only) are set forth in Section 8 following.

7.1.6 Design Layout Report

At the request of the customer, the Telephone Company will provide to the customer the make-up of the facilities and services provided under this tariff as Special Access Service to aid the customer in designing its overall service. This information will be provided in the form of a Design Layout Report. The Design Layout Report will be provided to the customer at no charge, and will be reissued or updated whenever these facilities are materially changed.

Pursuant to Orders No. 6 & 7 in Docket U-90-26

RECEIVED
NOV 21 1990
State of Alaska
Public Utilities Commission

ACCESS SERVICES

7. Special Access Service (Cont'd)

7.1 General (Cont'd)

7.1.7 Acceptance Testing

At no additional charge, the Telephone Company will, at the customer's request, cooperatively test the following at the time of installation:

A. For Voice Grade analog services, the acceptance test will include tests for loss, 3-tone slope, DC continuity, operational signaling, C-notched noise, and C-message noise when these parameters are applicable and specified in the order of service. Additionally, for Voice Grade services, a balance (improved loss) test will be made if the customer has ordered the improved loss optional feature.

B. For other analog services (i.e. Program Audio and Video) and for digital services (i.e., Digital Data and High Capacity), acceptance tests will include tests applicable to the service as specified by the customer in the order for service.

In addition to the above tests, Additional Cooperative Acceptance Testing for Voice Grade service to test other parameters is available at the customer's request. All test results will be made available to the customer upon request.

7.1.8 Ordering Options and Conditions

Special Access Service is ordered under the Access Order provisions set forth in Section 5 preceding. Also included in that section are other charges which may be associated with ordering Special Access Service (e.g., Service Date Change Charges, Cancellation Charges, etc.).

Pursuant to Orders No. 6 & 7 in Docket U-90-26

RECEIVED

JUN 1 1 2009

STATE OF ALASKA
REGULATORY COMMISSION OF ALASKA

ACCESS SERVICES

7. Special Access Service (Cont'd)

7.2 Rate Regulations

This section contains the specific regulations governing the rates and charges that apply for Special Access.

7.2.1 Rate Categories

There are three basic rate categories which apply to Special Access Service:

- Channel Terminations (described in 7.2.1(A) following)
- Channel Mileage (described in 7.2.1(B) following)
- Optional Features and Functions (described in 7.2.1(C) following.)

A. Channel Termination

The Channel Termination rate category recovers the costs associated with the communications path between a customer designated premises and the serving wire center of that premises. Included as part of the Channel Termination is a standard channel interface arrangement which defines the technical characteristics associated with the type of facilities to which the access service is to be connected at the Point of Termination (POT) and the type of signaling capability, if any. The signaling capability is provided as an optional feature as set forth in (C) following. For Synchronous Optical Channel Service the high speed optical communications path is between the Optical Line Termination (OLT) at the customer designated premises and the serving wire center of that premises. (N) | (N)

One Channel Termination charge applies per customer designated premises at which the channel is terminated. This charge will apply even if the customer designated premises and the serving wire center are collocated in a Telephone Company building.

For a Special Access Digital Data Service 56.0 or 64.0 Kbps Bit Rate or High Capacity Service connecting a customer designated premises to a Public Packet Data Network Service as described in Section 12, following, there will be a charge for only one Channel Termination.

RECEIVED

JUN 1 1 2009

STATE OF ALASKA
REGULATORY COMMISSION OF ALASKA

ACCESS SERVICES

7. Special Access Service (Cont'd)

7.2 Rate Regulations (Cont'd)

7.2.1 Rate Categories (Cont'd)

B. Channel Mileage

The Channel Mileage rate category recovers the costs associated with the end office equipment and the transmission facilities between the serving wire centers associated with two customer designated premises, between a serving wire center associated with a customer designated premises and a Telephone Company hub or between two Telephone Company hubs. Channel Mileage rates are made up of the Channel Mileage Facility rate and the Channel Mileage Termination rate.

1. Channel Mileage Facility

The Channel Mileage Facility rate recovers the per mile cost for the transmission path which extends between the Telephone Company serving wire centers and/or hub(s) or between the Telephone Company serving wire center and another wire center equipped for Frame Relay Access Service.

The Synchronous Optical Channel Service Channel Mileage Facility provides high speed transmission facilities between the Telephone Company serving wire centers, or between a Telephone Company serving wire center and another wire center equipped for Add/Drop Multiplexing (ADM), or between two ADM equipped wire centers, or between the Telephone Company serving wire center and another wire center equipped with Ethernet Transport Service, or between a Telephone Company serving wire center equipped with ETS and another telephone company Ethernet-equipped serving wire center that is located in a non-adjacent serving territory. (N)

(N)

RECEIVED

JUN 1 1 2009

STATE OF ALASKA
REGULATORY COMMISSION OF ALASKA

ACCESS SERVICES

7. Special Access Service (Cont'd)

7.2 Rate Regulations (Cont'd)

7.2.1 Rate Categories (Cont'd)

B. Channel Mileage (Cont'd)

2. Channel Mileage Termination

The Channel Mileage Termination rate recovers the cost for end office equipment associated with terminating the facility (i.e., basic circuit equipment and terminations at serving wire centers and hubs). The Channel Mileage Termination rate will apply at the serving wire center(s) for each customer designated premises and Telephone Company hub where the channel is terminated. If the Channel Mileage is between Telephone Company bridging hubs, the Channel Mileage Termination rate will apply per Telephone Company designated hub. If the Channel Mileage is between the serving wire center for a customer designated premises and a WATS Serving Office, the Channel Mileage Termination rate will apply at both the serving wire center associated with the customer designated premises and the WATS Serving Office.

If the Channel Mileage is between the serving wire center for a customer designated premises and another wire center equipped for Frame Relay Access or Public Packet Data Network Service, the Channel Mileage Termination Rate will apply only at the serving wire center for the customer designated premises. (C) | (C)

JUN 11 2009

STATE OF ALASKA
REGULATORY COMMISSION OF ALASKA

7. Special Access Service (Cont'd)

7.2 Rate Regulations (Cont'd)

7.2.1 Rate Categories (Cont'd)

B. Channel Mileage (Cont'd)

2. Channel Mileage Termination (N)

If the Channel Mileage for Synchronous Optical Channel Service is between the serving wire center for a customer designated premises and a wire center equipped for Add/Drop Multiplexing, the Channel Mileage Termination Rate will apply at both the serving wire center associated with the Customer Designated Premises and the wire center equipped for Add/Drop Multiplexing. If the Channel Mileage is between two wire centers equipped for Add/Drop Multiplexing, the Channel Mileage Termination rate will apply at both wire centers equipped for Add/Drop Multiplexing. (N)

When Channel Mileage Facility is zero (i.e., collocated serving wire centers), neither the Channel Mileage Facility rate nor the Channel Mileage Termination rate will apply.

RECEIVED
NOV 21 1990
State of Alaska
Public Utilities Commission

ACCESS SERVICES

7. Special Access Service (Cont'd)

7.2 Rate Regulations (Cont'd)

7.2.1 Rate Categories (Cont'd)

C. Optional Features and Functions

The Optional Features and Functions rate category recovers the costs associated with optional features and functions which may be added to a Special Access Service to improve its quality or utility to meet specific communications requirements. These are not necessarily identifiable with specific equipment, but rather represent the end result in terms of performance characteristics which may be obtained. These characteristics may be obtained by using various combinations of equipment. Although the equipment necessary to perform a specified function may be installed at various locations along the path of the service, they will be charged for as a single rate element.

Examples of Optional Features and Functions that are available include, but are not limited to, the following:

- Signaling Capability
- Hubbing Functions
- Conditioning

A hub is a Telephone Company designated serving wire center at which bridging or multiplexing functions are performed. The bridging functions performed are to connect three or more customer designated premises in a multipoint arrangement. The multiplexing functions are to channelize analog or digital facilities to individual services requiring a lower capacity or bandwidth. NATIONAL EXCHANGE CARRIER ASSOCIATION TARIFF, INC. F.C.C. NO. 4 identifies serving wire centers, hub locations and the type of bridging or multiplexing functions available.

Descriptions for each of the available Optional Features and Functions are set forth in 7.4 through 7.8 following.

RECEIVED
NOV 21 1990
State of Alaska
Public Utilities Commission

ACCESS SERVICES

7. Special Access Service (Cont'd)

7.2 Rate Regulations (Cont'd)

7.2.2 Types of Rates and Charges

There are three types of rates and charges. These are monthly rates, daily rates and nonrecurring charges. The rates and charges are described as follows:

A. Monthly Rates

Monthly rates are recurring rates that apply each month or fraction thereof that a Special Access Service is provided. For billing purposes, each month is considered to have 30 days.

B. Daily Rates

Daily rates are recurring rates that apply to each 24 hour period or fraction thereof that a Program Audio or Video Special Access Service is provided for part-time use. For purposes of applying daily rates, the 24 hour period is not limited to a calander day.

Part-time Video or Program Audio Service provided within a consecutive 30 day period will be charged the daily rate, not to exceed the monthly rate. For each day or partial day after a consecutive 30 day period of service, a charge equal to 1/30th of the monthly rate shall apply.

C. Nonrecurring Charges

Nonrecurring charges are one-time charges that apply for specific work activity (i.e., installation or change to an existing service). The types of nonrecurring charges that apply for Special Access Service are: installation of service, installation of optional features and functions, and service rearrangements. These charges are in addition to the Access Order Charge.

Pursuant to Orders No. 6 & 7 in Docket U-90-26

RECEIVED
NOV 21 1990
State of Alaska
Public Utilities Commission

ACCESS SERVICES

7. Special Access Service (Cont'd)

7.2 Rate Regulations (Cont'd)

7.2.2 Types of Rates and Charges

C. Nonrecurring Charges (Cont'd)

1. Installation of Service

Nonrecurring charges apply to each service installed. The nonrecurring charges for the installation of service are set for each channel type as a nonrecurring charge for the Channel Termination.

2. Installation of Optional Features and Functions

When optional features and functions are installed coincident with the initial installation of service, no separate nonrecurring charge is applicable. When optional features and functions are installed or changed subsequent to the installation of service, an Access Order Charge will apply per order.

3. Service Rearrangements

Service rearrangements are changes to existing (installed) services which may be administrative only in nature, as set forth following, or that involve actual physical change to the service. Changes to pending orders are set forth in Section 5 preceding.

Changes in the physical location of the point of termination or customer designated premises are moves as set forth in 7.2.3 following.

Changes in the type of service or Channel Termination which result in a change of the minimum period requirement (see 7.2.4) will be treated as a discontinuance of the service and an installation of a new service.

Pursuant to Orders No. 6 & 7 in Docket U-90-26

RECEIVED
NOV 21 1990
State of Alaska
Public Utilities Commission

ACCESS SERVICES

7. Special Access Service (Cont'd)

7.2 Rate Regulations (Cont'd)

7.2.2 Types of Rates and Charges (Cont'd)

C. Nonrecurring Charges (Cont'd)

3. Service Rearrangements (Cont'd)

Changes in ownership or transfer of responsibility from one customer to another will be treated as a discontinuance of the service and an installation of a new service. In the event the change in ownership or transfer of responsibility is as set forth in the Assignment of Transfer of Services section of this tariff, 2.1.2(A), preceding where there is no change in facilities or arrangements, the change will be treated as an administrative change.

Administrative changes will be made without charge(s) to the customer. Administrative changes are as follows:

- Change of customer name,
- Change of customer or customers' end user premises address when the change of address is not a result of physical relocation of equipment,
- Change in billing data (name, address, or contact name or telephone number),
- Change of agency authorization
- Change of customer circuit identification,
- Change of billing account number,
- Change of customer test line number,
- Change of customer or customer's end user contact name or telephone number, and
- Change of jurisdiction.

All other service rearrangements will be charged as follows:

Pursuant to Orders No. 6 & 7 in Docket U-90-26

RECEIVED
NOV 21 1990
State of Alaska
Public Utilities Commission

ACCESS SERVICES

7. Special Access Service (Cont'd)

7.2 Rate Regulations (Cont'd)

7.2.2 Types of Rates and Charges (Cont'd)

C. Nonrecurring Charges (Cont'd)

3. Service Rearrangements (Cont'd)

- If the change involves the addition of other customer designated premises to an existing service, the nonrecurring charge for the channel termination rate element will apply. The charge(s) will apply only for the location(s) that is being added. The charge(s) will be in addition to an Access Order Charge.

- If the change involves the addition of an optional feature or function, or if the change involves changing the type of signaling on a Voice Grade service, and for all other changes, the Access Order Charge will apply.

7.2.3 Moves

A move involves a change in the physical location of one of the following:

- The Point of Termination at the customer's premises
- The customer's premises

The charges for the move are dependent on whether the move is to a new location within the same building or to a different building.

A. Moves Within the Same Building

When the move is to a new location within the same building, the charge for the move will be an amount equal to one half of the nonrecurring (i.e., installation) charge for the service termination affected. There will be no change in the minimum period requirements. This charge is in addition to the Access Order Charge.

RECEIVED
APR 30 1997
ALASKA PUBLIC UTILITIES COMM.

ACCESS SERVICES

7. Special Access Service (Cont'd)

7.2 Rate Regulations (Cont'd)

7.2.3 Moves (Cont'd)

B. Moves To a Different Building

Moves to a different building will be treated as a discontinuance and start of service and all associated nonrecurring charges will apply. New minimum period requirements will be established for the new services. The customer will also remain responsible for satisfying all outstanding minimum period charges for the discontinued service.

7.2.4 Mileage Measurement

The mileage to be used to determine the monthly rate for the Channel Mileage Facility is calculated on the airline distance between the locations involved, i.e.,

- the serving wire centers associated with two customer designated premises,
- a serving wire center associated with a customer designated premises and a Telephone Company hub or, two Telephone Company hubs (C)
- a serving wire center associated with a customer designated premises and a wire center equipped for Frame Relay Access Service (N) (N)
- or between the serving wire center associated with a customer designated premises and a WATS Serving Office.

The serving wire center associated with a customer designated premises is the serving wire center from which this customer designated premises would normally obtain dial tone. (L) (L)

(L) Text relocated to Original Sheet No. 173.1.

Issued:
Issued By: Alaska Exchange Carriers Association, Inc.
By: Ruth A. Stubb Title: President

RECEIVED
APR 30 1997
ALASKA PUBLIC UTILITIES COMM.

ACCESS SERVICES

7. Special Access Service (Cont'd)

7.2 Rate Regulations (Cont'd)

7.2.4 Mileage Measurement (Cont'd)

Mileage charges are shown with each channel type. To determine the rate to be billed, first compute the mileage using the V&H coordinates method, as set forth in NATIONAL EXCHANGE CARRIER ASSOCIATION, INC., TARIFF FCC NO. 4, then multiply the resulting number of miles times the Channel Mileage Facility per mile rate, and add the Channel Mileage Termination rate for each termination. When the calculation results in a fraction of a mile, always round up to the next whole mile before determining the mileage and applying the rates. (L)

(L) Text relocated from Original Sheet No. 173.

RECEIVED

JUN 1 1 2009

STATE OF ALASKA
REGULATORY COMMISSION OF ALASKA

ACCESS SERVICES

7. Special Access Service (Cont'd)

7.2 Rate Regulations (Cont'd)

7.2.4 Mileage Measurement (Cont'd)

When hubs are involved, mileage is computed and rates applied separately for each section of the Channel Mileage, i.e.,

- customer designated premises serving wire center to hub,
- hub to hub and/or
- hub to customer designated premises serving wire center.

However, when any service is routed through a hub for purposes other than customer specified bridging or multiplexing (e.g., the Telephone Company chooses to so route for test access purposes), rates will be applied only to the distance calculated between the serving wire centers associated with the customer designated premises.

See the service configuration example for multipoint service as set forth in 7.1.3(B) preceding.

When Add/Drop Multiplexing is offered in connection with Synchronous Optical Channel Service, mileage is computed and rates applied separately for each section of the Channel Mileage, i.e., (N)

- Customer designated premises serving wire center to an Add/Drop Multiplexing (ADM) equipped wire center,
- ADM equipped wire center to ADM equipped wire center,
- ADM equipped wire center to a customer designated premises serving wire center. (N)

7.2.5 Facility Hubs

A customer has the option of ordering Voice Grade service or High Capacity services (i.e., DS1, DS1C, DS2, DS3 or DS4) to a facility hub for channelizing to individual services requiring lower capacity facilities.

Different locations may be designated as hubs for different facility capacities, e.g., multiplexing from digital to digital may occur at one location while multiplexing from digital to analog may occur at a different location. When placing an Access Order the customer will specify the desired hub. NATIONAL EXCHANGE CARRIER ASSOCIATION, INC., TARIFF FCC NO. 4 identifies serving wire centers, hub locations and the type of multiplexing functions available.

RECEIVED
NOV 21 1990
State of Alaska
Public Utilities Commission

ACCESS SERVICES

7. Special Access Service (Cont'd)

7.2 Rate Regulations (cont'd)

7.2.5 Facility Hubs (Cont'd)

Some of the types of multiplexing available include the following:

- from higher to lower bit rate
- from higher to lower bandwidth
- from high capacity to voice frequency channels.

Point to point services may be provided on channels of these services to a hub. The transmission performance for the point to point service provided between customer designated premises will be that of the lower capacity or bit rate. For example, when a 1.544 Mbps channel is multiplexed to voice frequency channels, the transmission performance of the channelized services will be Voice Grade, not High Capacity.

The Telephone Company will commence billing the monthly rate for the service to the hub on the date specified by the customer on the Access Order. Individual channels utilizing these services may be installed coincident with the installation of the service to the hub or may be ordered and/or installed at a later date, at the option of the customer. The customer will be billed for a Voice Grade or a High Capacity Channel Termination, Channel Mileage (when applicable), and the multiplexer at the time the service is installed. Individual service rates (by service type) will apply for a Channel Termination and additional Channel Mileage (as required) for each channelized service. These will be billed to the customer as each individual service is installed.

Cascading multiplexing occurs when a High Capacity service is de-multiplexed to provide channels with a lesser capacity and one of the lesser capacity channels is further de-multiplexed. For example, a 6.312 Mbps High Capacity service is de-multiplexed to four DS1 channels and then one of the DS1 channels is further de-multiplexed to 24 individual Voice Grade channels.

Pursuant to Orders No. 6 & 7 in Docket U-90-26

RECEIVED

JUN 1 1 2009

STATE OF ALASKA
REGULATORY COMMISSION OF ALASKA

ACCESS SERVICES

7. Special Access Service (Cont'd)

7.2 Rate Regulations (Cont'd)

7.2.5 Facility Hubs (Cont'd)

When cascading multiplexing is performed, whether in the same or a different hub, a charge for the additional multiplexing unit also applies. When cascading multiplexing is performed at different hubbing locations, Channel Mileage charges also apply between the hubs.

The Telephone Company will designate hubs for Program Audio and Video Services. Full-time or part-time service may be provided between customer designated premises or between a customer designated premises and a hub and billed accordingly at the monthly rates set forth in Section 13 and Section 14, following, for a Channel Termination, Channel Mileage and Optional Features and Functions, as applicable. When the service is ordered to a hub, the customer may order a full-time or part-time Video and Program Audio services as needed between that hub and additional customer designated premises. The rate elements required to provide the part-time service (i.e., Channel Termination, Channel Mileage and Optional Features and Functions, as applicable) will be billed at daily rates for the duration of the service requested. (T)

7.2.6 Mixed Use Analog and Digital High Capacity Services

Mixed use refers to a rate applicable when the customer orders High Capacity or Synchronous Optical Channel Service Special Access facilities between a customer designated premises and a Telephone Company hub where the Telephone Company performs multiplexing/ demultiplexing functions and the same customer then orders the derived channels as Special and Switched Access Services. (C)

The High Capacity or Synchronous Optical Channel Service facility will be ordered, provided and rated as Special Access Service (i.e., Channel Termination, Channel Mileage, as appropriate, and Multiplexing, Customer Node, Customer Premises Port, and Add/Drop Multiplexing). The nonrecurring charge that applies when the mixed use facility is installed will be the nonrecurring charge associated with the appropriate Special Access High Capacity or Synchronous Optical Channel Service Channel Termination. (C)

Text relocated from First Revised Sheet No. 177

RECEIVED
JUN 11 2009
STATE OF ALASKA
REGULATORY COMMISSION OF ALASKA

ACCESS SERVICES

7. Special Access Service (Cont'd)

7.2 Rate Regulations (Cont'd)

7.2.6 Mixed Use Analog and Digital High Capacity Services (Cont'd)

Rating as Special Access will continue until such time as the customer chooses to use a portion of the available capacity for Switched Access Service. Individual service (i.e., Switched or Special Access) nonrecurring charges will not apply to the individual channels of the mixed use facility.

When Special Access Service is provided utilizing a channel of the mixed use facility to a hub, High Capacity rates and charges will apply for the facility to the hub, as set forth preceding, and individual service rates and charges will apply from the hub to the customer designated premises.

The rates and charges that will apply to the portion from the hub to the customer designated premises will be dependent on the specific type of Special Access Service that is provided (e.g., Voice Grade, etc.). The applicable rates and charges will include a Channel Termination and Channel Mileage, if applicable. Rates and charges for optional features and functions associated with the service, if any, will apply for the appropriate channel type.

As each individual channel is activated for Switched Access Service, the High Capacity Special Access Channel Termination and Channel Mileage rates will be reduced accordingly (e.g., 1/24th for a DS1 service, etc.). Switched Access Service rates and charges will apply for each channel of the standard use facility that is used to provide a Switched Access Service.

Similarly, as each individual channel of Special Access Synchronous Optical Channel Service is activated for Switched Access Service, the Special Access Channel Termination, Channel Mileage, Customer Node, Customer Premises Port, and Add/Drop Multiplexing rates will be reduced accordingly (e.g., 1/2016th for an OC3 service, 1/8064th for an OC12 service). (N)

If the Special Access charges for the mixed use facility are subject to Optional Rate Plan discounts (e.g., Term Discount Optional Rate Plan) as set forth in Section 7.2.7.A, following, the Special Access charges will be reduced to reflect mixed use before the Optional Rate Plan Discounts are applied. (N)

RECEIVED
JUN 1 1 2009
STATE OF ALASKA
REGULATORY COMMISSION OF ALASKA

ACCESS SERVICES

7. Special Access Service (Cont'd)

7.2 Rate Regulations (Cont'd)

7.2.6 Mixed Use Analog and Digital High Capacity Services (Cont'd)

Switched Access Service rates and charges, as set forth in Section 13, following, will apply for each channel that is used to provide a Switched Access Service. The Switched Access Service Entrance Facility charge will be reduced by multiplying its rate by a rate reduction factor (i.e., the ratio of derived Switched Access Service channels to the total number of channels that can be derived). If the Telephone Company is providing Direct Trunked Transport, then the Direct Trunked Transport, Multiplexing, Customer Node, Customer Premises Port, and Add/Drop Multiplexing charges will be reduced by multiplying their respective rates by the rate reduction factor. (N)

The following table shows the total voice grade equivalents for each of the services that may be used for Mixed Use.

High Capacity or Synchronous Optical Channel Service	DS3	DS1	Voice Grade Equivalents
DS1	n/a	1	24
DS3	1	28	672
OC3	3	84	2016
OC12	12	336	8064

The customer must place an order for each individual Switched or Special Access Service utilizing the Mixed Use Facilities and specify the channel assignment for each such service. (N)

RECEIVED

JAN 19 2011

STATE OF ALASKA
REGULATORY COMMISSION OF ALASKA

ACCESS SERVICES

7. Special Access Service (Cont'd)

7.2 Rate Regulations (Cont'd)

7.2.7 Optional Rate Plans

A. Synchronous Optical Channel Service (SOCS) Optional Rate Plan (T)

The Synchronous Optical Channel Service Optional Rate Plan offers a Term Discount. The Term Discount applies to Channel Terminations, Channel Mileage, Customer Nodes, Customer Premises Ports and Central Office Ports monthly rates, as set forth following. The Term Discount percentages for the Synchronous Optical Channel Service Term Discount are as set forth in Section 14, following.

Discounts for the Synchronous Optical Channel Service Optional Rate Plan are only applied to Synchronous Optical Channel Service provided to a customer within the same state and LATA by the same Telephone Company.

The Synchronous Optical Channel Service Term Discount Optional Rate Plan is only available from those Telephone Companies with rates listed in Section 14, following.

OC3/OC3c and OC12 Synchronous Optical Channel Service may be ordered at the customer's option on a monthly rate basis or for the Term Discount periods of 36 months (3 years) or 60 months (5 years).

The minimum service period for all term discount plans is twelve months. The minimum service period will be waived for a Synchronous Optical Channel Service included in a Term Discount plan that is replaced with a qualifying SOCS Optional Rate Plan Replacement as set forth in Section 7.2.7(A)(3), following. The customer must specify the length of the service commitment period at the time the service is ordered. (N) | (N)

For customers that subscribe to the Term Discount plan for 36 or 60 months, the Term Discount percentage as set forth in Section 14, following, will be frozen from Company initiated decreases, for the entire discount period at the percent in effect at the beginning of the Term Discount period.

If a Term Discount percentage increase occurs during the term of an existing Term Discount plan, the increased percentage will be applied automatically to the remainder of the current Term Discount period.

RECEIVED

JAN 19 2011

STATE OF ALASKA
REGULATORY COMMISSION OF ALASKA

ACCESS SERVICES

7. Special Access Service (Cont'd)

7.2 Rate Regulations (Cont'd)

7.2.7 Optional Rate Plans

A. Synchronous Optical Channel Service (SOCS) Optional Rate Plan (Cont'd) (T)

At the end of the Term Discount period, the customer may convert to month-to-month service or subscribe to a new Term Discount plan. If the customer does not make a choice by the end of the discount period, the rates will automatically convert to month-to-month service rates. The minimum service period on a monthly rate basis is twelve months for Synchronous Optical Channel Service. The minimum (N) service period will be waived for a Synchronous Optical Channel Service included in a Term Discount plan that is replaced with a qualifying SOCS Optional Rate Plan Replacement as set for in Section 7.2.7(A)(3), following. (N)

To be included in a Term Discount plan, all eligible Synchronous Optical Channel Service rate elements must be ordered for the same commitment term (i.e., all 36 months or all 60 months) and with the same service date. When additional capacity is subsequently added, it will be available only on a month-to-month basis unless the discount period of the entire service is upgraded.

Eligible OC3/OC3c or OC12 Synchronous Optical Channel Service rate elements are those Channel Terminations, Channel Mileage Facility, Channel Mileage Terminations, Customer Nodes, Customer Premises Ports and Central Office Ports provided to a customer within the same state and LATA by the same Telephone Company. As long as the number of OC3s, OC3cs or OC12s included in a Term Discount plan remains constant, except for qualifying SOCS Optional Rate Plan (N) Replacements as set forth in Section 7.2.7(A)(3) following, customer requests to install and disconnect OC3, OC3c or OC12 services, including changes affecting different wire centers and/or customer designated premises, will not change the current Term Discount period or the minimum service period, and Discontinuance of Service charges as set forth in 7.2.7 A.3, following will not apply.

RECEIVED
JUN 11 2009
STATE OF ALASKA
REGULATORY COMMISSION OF ALASKA

7. **Special Access Service (Cont'd)**

7.2 **Rate Regulations (Cont'd)**

7.2.7 **Optional Rate Plans**

A. **Synchronous Optical Channel Service Optional Rate Plan (Cont'd)** (N)

1. **Upgrades in Term Discounts**

Services provided under monthly rates or Term Discount rates may be upgraded to a Term Discount plan at any time without incurring nonrecurring charges or discontinuance charges for existing services. The new Term Discount plan must meet or exceed the service term of the plan being upgraded. For example, a service with a 36 month commitment period may be upgraded to a new 36 month, or 60 month service period. The monthly rates will be those that are in effect at the time the service is upgraded. A new minimum service period applies to all Synchronous Optical Channel Service that is upgraded.

2. **Upgrades in Capacity (OC3/OC3c to OC12)**

If the customer chooses to upgrade a service under the Term Discount rate plan to a higher capacity (i.e., OC3/OC3c to OC12), discontinuance charges will not apply, provided all the following conditions are met:

- The customer's order for the disconnect of the existing OC3/OC3c Service and the installation of the new OC12 Service are received at the same time and specifically reference the application of upgrade in capacity,
- The customer's disconnect order for the existing OC3/OC3c Service must reference the OC12 Service installation order,
- The new service has a total channel capacity greater than the total channel capacity of the service being discontinued and,
- The new Term Discount period meets or exceeds the Term Discount period being discontinued. (N)

RECEIVED

JAN 19 2011

STATE OF ALASKA
REGULATORY COMMISSION OF ALASKA

ACCESS SERVICES

7. Special Access Service (Cont'd)

7.2 Rate Regulations (Cont'd)

7.2.7 Optional Rate Plans

A. Synchronous Optical Channel Service (SOCS) Optional Rate Plan (Cont'd) (T)

2. Upgrades in Capacity (OC3/OC3c to OC12) (Cont'd)

A new minimum service period applies to all upgrades. Nonrecurring charges will not be assessed when an existing OC3/OC3c service is upgraded to an equivalent channel capacity at a higher speed.

Should the customer choose to upgrade either a portion of, or the entire OC3/OC3c Service under the Term Discount plan to an OC12 Service and move the service to a new customer location(s) within the same state and LATA, and when service is provided by the same telephone company, discontinuance charges will not apply.

(L)

(L)

(L) Text relocated to Original Sheet No. 177.5.4

RECEIVED

JAN 19 2011

STATE OF ALASKA
REGULATORY COMMISSION OF ALASKA

7. Special Access Service (Cont'd)

7.2 Rate Regulations (Cont'd)

7.2.7 Optional Rate Plans

A. Synchronous Optical Channel Service (SOCS) Optional Rate Plan (Cont'd)

3. SOCS Optional Rate Plan Replacements

All or a portion of existing OC3/OC3c or OC12 services included in a SOCS Optional Rate Plan may be replaced before the end of its term commitment period with a new or existing ETS Term Discount Plan without incurring Discontinuance of Service charges as set forth in (4), following, if all of the requirements listed in (a), below, are met.

a. A customer may replace all or a portion of the services included in its existing SOCS Optional Rate Plan(s) before the end of its term commitment period(s) with newly commited ETS Port(s) added to the customer's new or existing ETS Term Discount Plan provided:

(1) The term commitment period remaining in the customer's existing ETS Term Discount Plan or new ETS Term Discount Plan meets or exceeds the number of months remaining in the customer's existing SOCS Optional Rate Plan(s);

(2) The bandwidth capacity of the newly commited ETS Port(s) included in the new or existing ETS Term Discount Plan meets or exceeds the bandwidth capacity of the service(s) being replaced in the customer's exisiting SOCS Optional Rate Plan(s);

(3) The customer commits to retain the newly committed ETS Port(s) in-service at the same bandwidth capacity for the remaining term commitment period for its existing ETS Term Discount Plan or for the entire term commitment period of its new ETS Term Discount Plan;

RECEIVED

JAN 1 9 2011

STATE OF ALASKA
REGULATORY COMMISSION OF ALASKA

7. Special Access Service (Cont'd)

7.2 Rate Regulations (Cont'd)

7.2.7 Optional Rate Plans

A. Synchronous Optical Channel Service (SOCS) Optional Rate Plan (Cont'd)

3. SOCS Optional Rate Plan Replacements (Cont'd)

(4) The customer's orders for the disconnect of all or a portion of the services included in its SOCS Optional Rate Plan and newly committed ETS Port(s) to a new or existing ETS Term Discount Plan are submitted to the Telephone Company at the same time and include cross references as described in Section 5.2.1, preceding;

(5) Any newly committed ETS Ports are added to the customer's exisiting ETS Term Discount Plan before the last year of the exisiting term commitment period; and

(6) Any newly committed ETS Ports added to a new or existing ETS Term Discount Plan are installed at the same location as the service(s) being replaced under the customer's existing SOCS Optional Rate Plan(s).

b. If any of the requirements specified in (a), previous, are not met, replacement ETS Port(s) will not qualify for the provisions under Section 7.2.7 (A) (3). Discontinuance charges will apply to replace all or a portion of the services in an existing SOCS Optional Rate Plan as described in (4), following.

c. When a customer replaces all or a portion of the services included in its existing SOCS Optional Rate Plan with a newly committed ETS Port(s) added to the customer's new or existing ETS Term Discount Plan provided pursuant to Section 12.1.3 (E), following, the Telephone Company will waive any unsatisfied minimum period charges that may otherwise be applicable for disconnecting the customer's SOCS prior to satisfying the minimum service period.

RECEIVED

JAN 19 2011

STATE OF ALASKA
REGULATORY COMMISSION OF ALASKA

7. Special Access Service (Cont'd)

7.2 Rate Regulations (Cont'd)

7.2.7 Optional Rate Plans

A. Synchronous Optical Channel Service (SOCS) Optional Rate Plan (Cont'd)

3. SOCS Optional Rate Plan Replacements (Cont'd)

d. The term discount percentage for the replacement ETS Term Discount Plan will apply on a going forward basis based on the customer's written request to establish a replacement term commitment period under Section 7.27 (A) (3), following.

e. When a customer replaces all or a portion of its existing SOCS Optional Rate Plan with a newly committed ETS Port(s) added to its existing ETS Term Discount Plan, the customer's existing ETS Term Discount Plan term commitment period would continue uninterrupted.

f. An Access Order Charge, as described in Section 5.7.1, preceding, does not apply to make a change to an existing SOCS Optional Rate Plan as a result of a SOCS Optional Rate Plan Replacement under this section. An Access Order Charge per order does apply to install an ETS Port(s).

g. Term and conditions for ETS Term Discount Plan are specified in Section 12.1.3, following.

RECEIVED

JAN 19 2011

STATE OF ALASKA
REGULATORY COMMISSION OF ALASKA

7. Special Access Service (Cont'd)

7.2 Rate Regulations (Cont'd)

7.2.7 Optional Rate Plans

A. Synchronous Optical Channel Service (SOCS) Optional Rate Plan (Cont'd)

4. Discontinuance of Service

Except as specified in (3), above, discontinuance charges, as described below, will apply to the portion of the service being discontinued when the customer chooses to disconnect all or a portion of the service prior to the expiration of the term commitment period.

a. Should the customer choose to discontinue a Term Discount plan prior to the completion of the minimum service period, discontinuance charges will apply. Discontinuance charges equal to one-hundred percent of the total undiscounted monthly rates, less any amounts previously paid, will apply for the minimum service period. Additionally, discontinuance charges of fifteen percent for OC3/OC3c Service, and thirty-five percent for OC12 Service, of the total undiscounted monthly charges will apply to the remaining portion of the term commitment period. (L)

b. Should the customer choose to discontinue service ordered under a Term Discount plan after the minimum service period but before the completion of the discount period, discontinuance charges will apply. Discontinuance charges of fifteen percent for OC3/OC3c Service, and thirty-five percent for OC12 Service, of the total undiscounted monthly charges will apply to the remaining portion of the term commitment period. For example, a customer has an OC3 Service which it chooses to discontinue after 33 months into a 60-month service term. The discontinuance charge would be 0.15 times 27 months times the undiscounted monthly rates for that service. (L)

(L) Text relocated from Original Sheet No. 177.5

RECEIVED
NOV 21 1990
State of Alaska
Public Utilities Commission

ACCESS SERVICES

7. Special Access Service (Cont'd)

7.3 Surcharge for Special Access Service

7.3.1 General

Special access services provided under this tariff may be subject to the monthly Special Access Surcharge.

7.3.2 Application

A. The Special Access Surcharge will apply to each intrastate Special Access Service that terminates on an end user's PBX or other device, where through a function of the device, the Special Access Service interconnects to the local exchange network. Interconnection functions include, but are not limited to, wiring and software functions, bridging, switching or patching of calls or stations. The Surcharge will apply irrespective of whether the interconnection function is performed in equipment located at the customer's premises or in a Centrex CO-type switch.

B. Special Access Service will be exempted from the Surcharge by the Telephone Company upon receipt of the customer's written certification for the following Special Access Service terminations:

1. an open-end termination in a Telephone Company switch of an FX line, including CCSA and CCSA-equivalent ONALs; or

2. a termination used for TELEX service; or

3. a termination that by the nature of its operating characteristics could not make use of Telephone Company common lines such as, terminations which are restricted through hardware or software; or

Pursuant to Orders No. 6 & 7 in Docket U-90-26

RECEIVED
NOV 21 1990
State of Alaska
Public Utilities Commission

TELEPHONE EXCHANGE CARRIERS OF ALASKA

ACCESS SERVICES

7. Special Access Service (Cont'd)

7.3 Surcharge for Special Access Service (Cont'd)

7.3.2 Application (B) (Cont'd)

4. a termination that interconnects either directly or indirectly to the local exchange network where the usage is subject to Carrier Common Line charges such as, where the Special Access Service accesses only FGA and no local exchange lines, or Special Access Service between customer points of termination; or

5. a termination that the customer certifies to the Telephone Company is not connected to a PBX or other device which interconnects the Special Access Service to a local exchange subscriber line.

7.3.3 Exemption of Special Access Service Surcharge

A. Special Access Services which are terminated as set forth in 7.3.2B preceding will be exempted from the Special Access Surcharge if the customer provides the Telephone Company with written exemption certification. The certification may be provided to the Telephone Company as follows:

- at the time the Special Access Service is ordered or installed;

- at such time as the service is reterminated to a device which does not interconnect the service to local exchange facilities; or

- at such time as the service becomes associated with a Switched Access Service that is subject to Carrier Common Line Charges.

B. The exemption certification is to be provided by the customer ordering the service. The certification must be signed by the customer or authorized representative and include the category of exemption, as set forth in 7.3.2B preceding, for each termination, and the date which the exemption is effective.

Pursuant to Orders No. 6 & 7 in Docket U-90-26

RECEIVED
NOV 21 1990
State of Alaska
Public Utilities Commission

ACCESS SERVICES

7. Special Access Service (Cont'd)

7.3 Surcharge for Special Access Service (Cont'd)

7.3.3 Exemption of Special Access Service Surcharge (Cont'd)

C. The customer shall also notify the Telephone Company when an exempted Special Access Service is changed or reterminated such that the exemption is no longer applicable.

D. The Telephone Company will work cooperatively with the customer to resolve any questions regarding the exemption certification. In addition, the Telephone Company may withhold exemption of the service until the questions are resolved.

7.3.4 Rate Regulations

A. The surcharge will apply as set forth in 7.3.2A preceding, except that a surcharge will be assessed on a per voice grade equivalent basis for Special Access Services derived from High Capacity Special Access Services as illustrated in the following example:

Special Access Service	Voice Grade Equivalent		Surcharge	Monthly Charge
DS1	24	x	$25	= $600.00

The preceding example illustrates the maximum number of surcharges applicable to a DS1. If the customer claims exemption(s) as set forth in 7.3.3 preceding or, is not utilizing all available voice grade equivalents and has spare capacity, the number of surcharges would be reduced accordingly.

In the case of multipoint Special Access Services, one Special Access Surcharge will apply for each termination of a Special Access Channel at an end user's premises.

Pursuant to Orders No. 6 & 7 in Docket U-90-26

RECEIVED
NOV 21 1990
State of Alaska
Public Utilities Commission

ACCESS SERVICES

7. Special Access Service (Cont'd)

7.3 Surcharge for Special Access Services (Cont'd)

7.3.4 Rate Regulations (Cont'd)

B. The Telephone Company will bill the appropriate Special Access Surcharge to the ordering customer for each intrastate Special Access Service installed unless exemption certification is provided as set forth in 7.3.3 preceding.

C. If a written certification is not received at the time the Special Access Service is obtained, the Surcharge will be applied. Exempt status will become effective on the certification date indicated by the customer, subject to the regulations set forth in D following.

D. Crediting the Surcharge

The Telephone Company will cease billing the Special Access Surcharge when certification, as set forth in 7.3.3. preceding, is received. If the status of the Special Access Service was changed prior to receipt of the exemption certification, the Telephone Company will credit the customer's account, not to exceed 90 days, based on the effective date of the change as specified by the customer in the letter of certification.

7.4 Voice Grade Service

7.4.1 Basic Channel Description

A Voice Grade channel is a channel which provides voice frequency transmission capability in the nominal frequency range of 300 to 3000 Hz and may be terminated two-wire or four-wire. Voice Grade channels are provided between customer designated premises, between a customer designated premises and a Telephone Company hub or hubs, or between a customer designated premises and a WATS Serving Office (WSO).

Pursuant to Orders No. 6 & 7 in Docket U-90-26

RECEIVED
NOV 21 1990
State of Alaska
Public Utilities Commission

ACCESS SERVICES

7. Special Access Service (Cont'd)

7.4 Voice Grade Service (Cont'd)

7.4.1 Basic Channel Description (Con'd)

Voice Grade Special Access services are typically used for voice and voiceband data applications. Typical examples of voice grade circuits are Foreign Exchange lines (station end only), multipoint private line, voice trunk type, two-point voice grade data (one-way or simultaneous two-way), multipoint voice grade data, and voice grade telephoto or facsimile. These examples of applications are not intended to limit a customer's use of the channel nor to imply that the channel is limited to a particular use.

Rates and charges for Special Access Voice Grade Service are as set forth in Exchange Carrier Rate Sheets for Intrastate Special Access Service.

7.4.2 Technical Specifications Packages and Network Channel Interfaces.

Technical Specifications Packages are set forth in 11.2.1 following. Compatible network channel interfaces are set forth in 11.2.2 following.

7.4.3 Chargeable Optional Features and Functions

A. Central Office Bridging Capability

1. Voice Bridging (two-wire and four-wire)

2. Data Bridging (two-wire and four-wire)

3. Telephoto Bridging (two-wire and four-wire)

4. Telemetry and Alarm Bridging
Split Band, Active Bridging
Passive Bridging
Summation, Active Bridging

B. Conditioning

Conditioning provides more specific transmission characteristics for Voice Grade services.

Pursuant to Orders No. 6 & 7 in Docket U-90-26

RECEIVED
NOV 21 1990
State of Alaska
Public Utilities Commission

ACCESS SERVICES

7. Special Access Service (Cont'd)

7.4 Voice Grade Service (Cont'd)

7.4.3 Chargeable Optional Features and Functions (B) (Cont'd)

For two-point services, the parameters apply to each service as measured end-to-end. For multipoint services, the parameters apply as measured on each mid-link or as measured on each end link. C-Type conditioning and Data Capability may be combined on the same service.

1. C-Type Conditioning

C-Type Conditioning is provided for the additional control of attenuation distortion and envelope delay distortion on data services. The attenuation distortion and envelope delay distortion specifications for C-Type Conditioning are delineated in Technical Reference TR-NPL-000335.

2. Improved Attenuation Distortion*

Improved Attenuation Distortion upgrades the frequency versus loss limits of the channel. The technical specifications for Improved Attenuation Distortion are delineated in Technical Reference TR-NPL-000335. This option is available only when ordered in combination with C-Type Conditioning.

3. Improved Envelope Delay Distortion*

Improved Envelope Delay Distortion upgrades the frequency versus delay response limits of the channel. The technical specifications for Improved Envelope Delay Distortion are delineated in Technical Reference TR-NPL-000335. This option is available only when ordered in combination with C-Type Conditioning.

* Improved Attenuation Distortion and Improved Envelope Delay Distortion will continue to be provided to all customers who were provided with either or both of these optional features in conjunction with C-Type Conditioning prior to May 4, 1988.

RECEIVED
NOV 21 1990
State of Alaska
Public Utilities Commission

ACCESS SERVICES

7. Special Access Service (Cont'd)

7.4 Voice Grade Service (Cont'd)

7.4.3 Chargeable Optional Features and Functions (Cont'd)

B. Conditioning (Cont'd)

4. Data Capability (D Conditioning)

Data Capability provides transmission characteristics suitable for data communications. Specifically, Data Capability provides for the control of Signal to C-Notched Noise Ratio and intermodulation distortion. It is available for two-point services or three-point multipoint services.

The Signal to C-Notched Noise Ratio and intermodulation distortion parameter for Data

Capability are delineated in Technical Reference TR-NPL-000335. The rate for this option is set forth in Exchange Carrier rates following.

When a service equipped with Data Capability is used for voice communications, the quality of the voice transmission may not be satisfactory.

5. Telephoto Capability

Telephoto Capability provides transmission characteristics suitable for telephotographic communications. Specifically, Telephoto Capability is provided for the control of attenuation distortion and envelope delay distortion on telephotographic services. The attenuation distortion and envelope delay distortion parameters for Telephoto Capability are delineated in Technical Reference TR-NPL-000335. The rate for this option is set forth in Exchange Carrier rates following.

Pursuant to Orders No. 6 & 7 in Docket U-90-26

RECEIVED

JUN 1 1 2009

STATE OF ALASKA
REGULATORY COMMISSION OF ALASKA

ACCESS SERVICES

7. Special Access Service (Cont'd)

7.4 Voice Grade Service (Cont'd)

7.4.3 Chargeable Optional Features and Functions (Cont'd)

B. Conditioning (Cont'd)

6. Sealing Current Conditioning

Sealing Current Conditioning is provided to help maintain continuity on dry metallic loops. It is usually associated with four-wire DA or NO type network channel interfaces.

C. Customer Specified Premises Receive Level

This option allows the customer to specify the receive level at the Point of Termination. The level must be within a specific range on effective four-wire transmission. The ranges are delineated in Technical Reference TR-NPL-000335. The rate for this option will be provided on an ICB basis.

D. Improved Return Loss

1. On effective Four-Wire Transmission at Four-Wire Point of Termination applicable to each two-wire port): Provides for a fixed 600 ohm impedance, variable level range and simplex reversal. Telephone Company equipment is required at the premises where this option is ordered. The Improved Return Loss parameters are delineated in Technical Reference TR-NPL-000335. The rate for this option is set forth in Section 13 and Section 14,following. (N)

RECEIVED

JUN 1 1 2009

STATE OF ALASKA
REGULATORY COMMISSION OF ALASKA

ACCESS SERVICES

7. Special Access Service (Cont'd)

7.4 Voice Grade Service (Cont'd)

7.4.3 Chargeable Optional Features and Functions (Cont'd)

D. Improved Return Loss (Cont'd)

2. On effective Two-Wire Transmission at Two-Wire Point of Termination: Provides for more stringent Echo Control specifications. In order for this option to be applicable, the transmission path must be four-wire at one POT and two-wire at the other POT. Placement of Telephone Company equipment may be required at the customer's premises with the two-wire POT. The Improved Return Loss parameters are delineated in Technical Reference TR-NPL-000335. The rate for this option is set forth in Section 13 and Section 14, following. (N)

E. Signaling Capability

Signaling Capability provides for the ability to transmit signals from one customer premises to another customer premises on the same service. The rate for this option is set forth in Section 13 and Section 14, following. (N)

The following network channel interfaces for Voice Grade service do not require signaling capability: AH, DA, DB, DD, DE, DS, NO, PR and TF.

The following network channel interfaces for Voice Grade service require signaling capability: AB, AC, CT, DX, DY, EA, EB, EC, EX, GO, GS, LA, LB, LC, LO, LR, LS, RV and SF.

RECEIVED

JUN 1 1 2009

STATE OF ALASKA
REGULATORY COMMISSION OF ALASKA

ACCESS SERVICES

7. Special Access Service (Cont'd)

7.4 Voice Grade Service (Cont'd)

7.4.3 Chargeable Optional Features and Functions (Cont'd)

F. Selective Signaling Arrangement

An arrangement that permits code selective ringing for up to ten codes on a multipoint service. The rate for this option is set forth in Section 13 and Section 14, following. (N)

G. Public Packet Switching Network (PPSN) Interface Arrangement

An arrangement that provides the interface requirements that permit a Voice Grade service to interface with a Public Packet Switching Network packet switch located in a Telephone Company premises. The interface is compatible with X.25 and X.75 packet switching protocols as defined by the CCITT. This option is provided on an Individual Case Basis.

H. Four-Wire/Two-Wire Conversions

When a customer requests that an effective four-wire channel be terminated with a two-wire channel interface at the customer designated premises, a four-wire to two-wire conversion is required. The customer will be charged the four-wire Channel Termination rate as set forth in Section 13 and Section 14, following, when an effective four-wire is specified in the order for service. The rate for the conversion is included as part of the basic four-wire Channel Termination rate. (N)

RECEIVED
JUL 23 1991
State of Alaska
Public Utilities Commission

TELEPHONE EXCHANGE CARRIERS OF ALASKA

ACCESS SERVICES

7. Special Access Service (Cont'd)

7.4 Voice Grade Service (Cont'd)

7.4.3 Chargeable Optional Features and Functions (Cont'd) (L)

I. Improved Two-Wire Voice Transmission (T)

1. Loss Deviation

The maximum Loss Deviation of the 1004 Hz loss relative to the Expected Measured Loss (EML) is -4.0 dB to +4.0 dB.

2. Attenuation Distortion

The maximum Attenuation Distortion in the 404 to 280 Hz frequency band relative to loss at 1004Hz is -2.0 dB to +6.0 dB.

3. C-Message Noise

The maximum C-Message Noise for the transmission path at the route miles listed is less than:

Route Miles	C-Message Noise
Less than 50	35 dBrnco
51 to 100	37 dBrnco
101 to 200	40 dBrnco
201 to 400	43 dBrnco
401 to 1000	45 dBrnco

(L) Material previously shown on Sheet No. 186 has been moved to Sheet No. 185.2.

"Pursuant to Letter Order dated 5/21/91."

Tariff Advice No. 4

Issued: 7/23/91 Effective May 21, 1991
Issued By: Alaska Exchange Carriers Association, Inc.
By: [signature] Title: President

RECEIVED
JUL 23 1991
State of Alaska
Public Utilities Commission

ACCESS SERVICES

7. Special Access Service (Cont'd)

7.4 Voice Grade Service (Cont'd)

7.4.3 Chargeable Optional Features and Functions (Cont'd)

I. (Cont'd) (T)

4. Return Loss

The Return Loss, expressed as Echo Return Loss (ERL) and Singing Return Loss (SRL), is equal to or greater than:

ERL	13.0 dB
SRL	6.0 dB

The rate for the provision of Improved Two-Wire Voice Transmission is included as part of the basic Channel Termination rate.

7.5 Program Audio Service (Closed Circuit)

7.5.1 Basic Channel Description

A Program Audio channel is a channel with bandwidth measured in Hz for the transmission of a complex signal voltage. The actual bandwidth is a function of the channel interface selected by the customer. Only one-way transmission is provided. Program Audio channels are provided between customer designated premises or between a customer (T) designated premises and a Telephone Company hub or hubs. (D)

(D)

Intrastate Program Audio Service is for closed (N) circuit application only. (N)

Rates and charges for Special Access Program Audio Service are on an individual case basis.

"Pursuant to Letter Order dated 5/21/91."

Tariff Advice No. 4

Issued: 7/23/91 Effective May 21, 1991
Issued By: Alaska Exchange Carriers Association, Inc.
By: [signature] Title: President

RECEIVED
DEC 20 1990
State of Alaska
Public Utilities Commission

ACCESS SERVICES

7. Special Access Service (Cont'd)

7.5 Program Audio Service (Closed Circuit) (Cont'd)

7.5.2 Technical Specifications Packages and Network Channel Interfaces

Technical Specifications Packages are set forth in 11.2.1(D) following. Compatible network channel interfaces are set forth in 11.2.2(C)(4) following.

7.5.3 Optional Features and Functions

(A) Central Office Bridging Capability

Distribution Amplifier

(B) Gain Conditioning

Control of 1004 Hz AML at initiation of service to 0 Db +0.5 Db.

(C) Stereo

Provision of a pair of gain/phase equalized channels for stereo applications. (An additional Program Audio channel must be ordered separately.)

The table set forth in 11.2.1(D) following shows the technical specifications packages with which the optional features and functions are available.

Pursuant to Orders No. 6 & 7 in Docket U-90-26

RECEIVED
JUN 25 1991
State of Alaska
Public Utilities Commission

ACCESS SERVICES

7. Special Access Service (Cont'd)

7.6 Video Service (Closed Circuit)

7.6.1 Basic Channel Description

A Closed Circuit Video channel is a channel with one-way transmission capability for a standard 525 line/60 field monochrome, or National Television Systems Committee color, video signal and one or two associated 5 or 15 kHz audio signal(s). The associated audio signal(s) may be either diplexed or provided as one or two separate channels. The provision and the bandwidth of the associated audio signal(s) is a function of the channel interface selected by the customer. Video channels are provided between customer designated premises or between a customer designated premises and a Telephone Company hub or hubs. (C) (C)

Rates and charges for Special Access Video Service are on a individual case basis.

7.6.2 Technical Specifications Packages and Network Channel Interfaces

Technical Specifications Packages are set forth in 11.2.1(E) following. Compatible network channel interfaces are set forth in 11.2.2(C)(3) following.

The following network channel interfaces (NCIs) define the bandwidth and the provision of the audio signal(s) associated with a Video channel:

NCI	Audio Bandwidth	Provision
2TV6-1	15kHz	1 Channel, diplexed
2TV6-2	15kHz	2 Channels, diplexed
2TV7-1	15kHz	1 Channel, diplexed
2TV7-2	15kHz	2 Channels, diplexed
4TV6-5	5kHz	1 Channel, separate
4TV6-15	15kHz	1 Channel, separate
4TV7-5	5kHz	1 Channel, separate
4TV7-15	15kHz	1 Channel, separate
6TV6-5	5kHz	2 Channels, separate
6TV6-15	15kHz	2 Channels, separate
6TV7-5	5kHz	2 Channels, separate
6TV7-15	15kHz	2 Channels, separate

RECEIVED

JUN 1 1 2009

STATE OF ALASKA
REGULATORY COMMISSION OF ALASKA

ACCESS SERVICES

7. Special Access Service (Cont'd)

7.7 Digital Data Service

7.7.1 Basic Channel Description

A Digital Data channel is a channel for duplex four-wire transmission of synchronous serial data at the rate of 2.4, 4.8, 9.6, 19.2, 56.0 or 64.0* Kbps. The actual bit rate is a function of the channel interface selected by the customer. The channel provides a synchronous service with timing provided by the Telephone Company through the Telephone Company's facilities to the customer in the received bit stream. Digital Data channels are provided as either hubbed or non-hubbed services between customer designated premises or between a customer designated premises and a Telephone Company hub or hubs.

The customer may provide the Channel Service Unit-type equipment or other Network Channel Terminating Equipment associated with the Digital Data channel at the customer premises.

The Telephone Company will provide a channel capable of meeting a monthly average performance equal to or greater than 99.875% error-free seconds (if provided through a Digital Data hub) while the channel is in service, if it is measured through a CSU equivalent which is designed, manufactured, and maintained to conform with the specifications contained in Technical Reference GR-342-CORE.

Rates and charges for the Special Access Digital Data Service are as set forth in Section 13.3.3. and Section 14, following. (N)

* When 64.0 Kbps service is multiplexed on a DS1 High Capacity service, the DS1 must be equipped to provide Clear Channel Capability.

RECEIVED
APR 30 1997
ALASKA PUBLIC UTILITIES COMM.

ACCESS SERVICES

7. Special Access Service (Cont'd)

7.7 Digital Data Service (Cont'd)

7.7.2 Technical Specifications Packages and Network Channel Interfaces

Technical Specifications Packages are set forth in section 11 following. Compatible channel interfaces are set forth in section 11 following.

The following network channel interfaces (NCIs) define the bit rates that are available for a Digital Data channel:

NCI	Bit Rate
DU-24	2.4 Kbps
DU-48	4.8 Kbps
DU-96	9.6 Kbps
DU-19	19.2 Kbps
DU-56	56.0 Kbps
DU-64	64.0 Kbps

7.7.3 Chargeable Optional Features and Functions

The Optional Features and Functions described in (A), (B) and (C) following are only available where Digital Data Service is provided via a hub.
The Optional Features and Functions described in (D) following are available where Digital Data Service is provided on a non-hubbed basis. (N)

A. Central Office Bridging Capability

Bridging is not available on a 64.0 Kbps channel.

RECEIVED
JUN 19 1996
State of Alaska
Public Utilities Commission

7. Special Access Service (Cont'd) (N)

7.7 Digital Data Service (Cont'd)

7.7.4 Chargeable Optional Features and Functions (Cont'd)

B. Transfer Arrangement

An arrangement that affords the customer an additional measure of protection and/or flexibility in the use of their access channel(s) on a 1xN basis. The arrangement can be utilized to transfer a leg of a Special Access Service to either a spare or working channel that terminates in either the same or a different customer designated premises. This arrangement is only available at a Telephone Company designated hub. A key activated or dial-up control service is required to operate the transfer arrangement. A spare channel, if required, is not included as a part of the option.

C. Public Packet Switching Network (PPSN) Interface Arrangement

An arrangement that provides the interface requirements that permit a Digital Data Service to interface with a Public Packet Switching Network packet switch located in a Telephone Company premises. The interface is compatible with X.25 and X.75 packet switching protocols as defined by the CCITT.

The table set forth in 11.2.1 following shows the technical specifications packages with which the optional features and functions are available. (N)

RECEIVED
APR 30 1997
ALASKA PUBLIC UTILITIES COMM.

ACCESS SERVICES

7. Special Access Service (Cont'd) (N)

7.7 Digital Data Service (Cont'd)

7.7.4 Chargeable Optional Features and Functions (Cont'd)

D. Public Packet Data Service Interface Arrangement

An arrangement that provides for the interface requirements that permit a Digital Data Service to interface with a Public Packet Data switch located in a Telephone Company premises. The interface is compatible with Frame Relay packet switching protocols. The interface is only available for 56.0 kbps and 64.0 kbps rates.

The table set forth in 11.2.1 following shows the technical specifications packages with which the optional features and functions are available. (N)

RECEIVED
NOV 21 1990
State of Alaska
Public Utilities Commission

ACCESS SERVICES

7. Special Access Service (Cont'd)

7.8 High Capacity Service

7.8.1 Basic Channel Description

A High Capacity channel is a channel for the transmission of nominal 64.0 Kbps* or 1.544, 3.152, 6.132, 44.736, or 274.176 Mbps isochronous serial data. The actual bit rate is a function of the channel interface selected by the customer. High Capacity channels are provided between customer designated premises or between a customer designated premises and a Telephone Company hub or hubs.

The customer will provide the Network Channel Terminating Equipment associated with the High Capacity channel at the customer's premises.

A channel with technical specifications package HC1 will be capable of an error-free second performance of 98.75% over a continuous 24 hour period as measured at the 1.544 Mbps rate through a CSU equivalent which is designed, manufactured, and maintained to conform with the specifications contained in Technical Reference PUB 62411.

Rates and charges for Special Access High Capacity Service are as set forth in Exchange Carrier Rate Sheets for Intrastate Special Access Services.

* Available only as a channel of a 1.544 Mbps facility to a Telephone Company Digital Data hub or as a cross connect of two 2.4, 4.8, 9.6, 56.0 or 64.0Kbps channels of two 1.544 Mbps facilities to a Digital Data hub(s). The customer must provide system and channel assignment data.

RECEIVED
NOV 21 1990
State of Alaska
Public Utilities Commission

ACCESS SERVICES

7. Special Access Service (Cont'd)

7.8 High Capacity Service (Cont'd)

7.8.2 Technical Specifications Packages and Network Channel Interfaces

Technical Specifications Packages are set forth in 11.1 following. Compatible channel interfaces are set forth in 11.2 following.

The following network channel interfaces (NCIs) define the bit rates that are available for a High Capacity channel:

NCI	Bit Rate
DS-15	1.544 Mbps (DS1)
DS-27	274.176 Mbps (DS4)
DS-31	3.152 Mbps (DS1C)
DS-44	44.736 Mbps (DS3)
DS-63	6.312 Mbps (DS2)

7.8.3 Chargeable Optional Features and Functions

A. Automatic Loop Transfer

The Automatic Loop Transfer provides protection on a 1xN basis against failure of the facilities between a customer designated premises and the wire center serving that premises. Protection is furnished through the use of a switching arrangement that automatically switches to a spare channel line when a working line fails. The spare channel is not included as a part of the option. This option requires compatible equipment at both the serving wire center and the customer designated premises. The customer is responsible for providing the equipment at its designated premises.

Pursuant to Orders No. 6 & 7 in Docket U-90-26

RECEIVED
NOV 21 1990
State of Alaska
Public Utilities Commission

ACCESS SERVICES

7. Special Access Service (Cont'd)

7.8 High Capacity Service (Cont'd)

7.8.3 Chargeable Optional Features and Functions (Cont'd)

B. Transfer Arrangement

An arrangement that affords the customer an additional measure of flexibility in the use of their access channel(s). The arrangement can be utilized to transfer a leg of a Special Access Service to either a spare or working channel that terminates in either the same or a different customer designated premises. A key activated or dial-up control service is required to operate the transfer arrangement. A spare channel, if required, is not included as part of the option.

C. Central Office Multiplexing

1. DS4 to DS1

An arrangement that converts a 274.176 Mbps channel to 168 DS1 channels using digital time division multiplexing.

2. DS3 to DS1

An arrangement that converts a 44.736 Mbps channel to 28 DS1 channels using digital time division multiplexing.

3. DS2 to DS1

An arrangement that converts a 6.312 Mbps channel to four DS1 channels using digital time division multiplexing.

4. DS1C to DS1

An arrangement that converts a 3.152 Mbps channel to two DS1 channels using digital time division multiplexing.

Pursuant to Orders No. 6 & 7 in Docket U-90-26

RECEIVED

JUN 1 1 2009

STATE OF ALASKA
REGULATORY COMMISSION OF ALASKA

ACCESS SERVICES

7. Special Access Service (Cont'd)

7.8 High Capacity Service (Cont'd)

7.8.3 Chargeable Optional Features and Functions (Cont'd)

C. Central Office Multiplexing (Cont'd)

5. DS1 to Voice

An arrangement that converts a 1.544 Mbps channel to 24 channels for use with Voice Grade Services. A channel(s) of this DS1 to the Hub can also be used for a Digital Data Service.

6. DS1 to DS0

An arrangement that converts a 1.544 Mbps channel to 23 64.0 Kbps channels utilizing digital time division multiplexing.

7. DS0 to Subrate

An arrangement that converts a 64.0 Kbps channel to subspeeds of up to twenty 2.4 Kbps, ten 4.8 Kbps, or five 9.6 Kbps channels using digital time division multiplexing.

The table set forth in 11.2 following shows the technical specifications packages with which the optional features and functions are available. (C)

RECEIVED

JUN 1 1 2009

STATE OF ALASKA
REGULATORY COMMISSION OF ALASKA

ACCESS SERVICES

7. Special Access Service (Cont'd)

7.9 Synchronous Optical Channel Service (N)

7.9.1 Basic Channel Description

A Synchronous Optical Channel Service channel provides dedicated transport utilizing Synchronous Optical Network (SONET) transmission standards. Synchronous Optical Channel Service provides optical network capability to customers requiring connections at transmission rates of 155.52 Mbps (OC3) and 622.08 Mbps (OC12). Synchronous Optical Channel Service is provided between two customer designated premises (CDP) through one or more Telephone Company wire centers, or between a CDP and a wire center equipped with Asynchronous Transfer Mode Cell Relay Access Service , or between a CDP and a wire center equipped for Add/Drop Multiplexing (ADM). In addition, customers at an ADM equipped wire center may add or drop bandwidth capacity from the synchronous optical channel for delivery to a customer designated premises, WATS office, Public Packet Data Network Service, or another wire center.

OC3/OC3c Synchronous Optical Channel Service may also be provided between a customer designated premises and a Telephone Company.

Additionally, a Synchronous Optical Channel Service channel may be provided between a customer designated premises and a serving wire center equipped with Ethernet Transport Service (ETS) and/or between a Telephone Company serving wire center equipped with ETS and another telephone company Ethernet-equipped serving wire center that is located in a non-adjacent serving territory.

Each channel will be configured with one working and one protect fiber pair within the same sheath between the CDP and the serving wire center of the CDP which provides redundancy to protect the customer's service. Should a failure occur, the SONET technology will automatically switch the customer's transmission to the dedicated protect fiber pair.

The customer may provide node and port equipment at the CDP which allows the high speed optical carrier channel to be converted to an electrical signal at a lower speed. The provision of such equipment by the customer is subject to compatibility with the Telephone Company's equipment in the serving wire center and must comply with the standards specified in GR-253-CORE. (N)

(L)

(L) Text relocated to Original Sheet No. 198.4

RECEIVED

JUN 1 1 2009

STATE OF ALASKA
REGULATORY COMMISSION OF ALASKA

ACCESS SERVICES

7. Special Access Service (Cont'd)

7.9 Synchronous Optical Channel Service (Cont'd)

(N)

7.9.1 Basic Channel Description (Cont'd)

The OC3 channel is available in a non-concatenated format (OC3) which provides three individual signals. The OC3 channel is also available in a concatenated format (OC3c) which provides a single signal appropriate for data transmissions.

A term discount is available for Synchronous Optical Channel Service. A term discount is only available from those Telephone Companies listed in Section 14, following. Section 7.2.7, preceding, specifies the conditions under which a term discount is applicable.

Synchronous Optical Channel Service is available at the wire centers as identified in National Exchange Carrier Association, Inc. Tariff F.C.C. No. 4.

Rates and charges for Synchronous Optical Channel Service are as set forth in Section 14, following. Synchronous Optical Channel Service is only available from those Telephone Companies offering the service as specified in Section 14, following.

Compatible channel interfaces for Synchronous Optical Channel Service are as set forth in Section 11, following. (N)

RECEIVED

JUN 1 1 2009

STATE OF ALASKA
REGULATORY COMMISSION OF ALASKA

ACCESS SERVICES

7. Special Access Service (Cont'd)

7.9 Synchronous Optical Channel Service (Cont'd) (N)

7.9.3 Optional Features and Functions

A. Customer Node

A Customer Node charge applies when the Telephone Company provides terminal equipment at the customer designated premises for termination of a Synchronous Optical Channel Service Channel Termination. Such equipment may be used to convert the signal from an optical to electrical format. The Customer Node charge is determined by the level of optical service (i.e., OC3, OC3c or OC12) delivered to the premises. Each Customer Node must be configured with one or more Customer Premises Ports.

Rates and charges for the Customer Node are as set forth in Section 14, following.

B. Customer Premises Port

Customer Premises Port charges apply in conjunction with the Customer Node charge. Each Customer Premises Port provides the interface to derive a lower capacity service at the customer premises. The type and quantity of ports is determined by the customer and is based on the type of Customer Node selected and the number of DS1, DS3, STS-1 and/or OC3/OC3c channels ordered. Customer Premises Ports are available at the following speeds:

Customer Premises Port	Speed
OC3, OC3c	155.52 Mbps
STS-1	51.84 Mbps
DS3	44.736 Mbps
DS1	1.544 Mbps

Rates and charges for the Customer Premises Port are as set forth in Section 14, following.

(N)

RECEIVED
JUN 11 2009
STATE OF ALASKA
REGULATORY COMMISSION OF ALASKA

7. Special Access Service (Cont'd)

7.9 Synchronous Optical Channel Service (Cont'd) (N)

7.9.3 Optional Features and Functions (Cont'd)

C. Add/Drop Multiplexing

An Add/Drop Multiplexing Central Office Port charge applies to the interface provided at a Telephone Company wire center for the purpose of adding or dropping lower capacity services from Synchronous Optical Channel Service Channel Termination or Channel Mileage transport facilities. Central Office Ports are available at the following speeds:

Central Office Port	Speed
OC3, OC3c	155.52 Mbps
DS3	44.736 Mbps
DS1	1.544 Mbps

OC12 service may only be multiplexed to OC3/OC3c channels.

When an OC3 channel is derived from an OC12 service and is further multiplexed to obtain DS3 service, a DS3 port charge will apply in addition to the OC3 port charge.

When a DS3 channel is derived from an OC3 service and is further multiplexed to obtain DS1 service, a DS3 to DS1 Mulitplexing charge as set forth in Section 14, following, will apply in addition to the DS3 port charge.

When a DS1 channel is directly derived from an OC3 service, a DS1 port charge will apply.

When a DS1 channel is further multiplexed to a lower level signal, a DS1 to Voice Grade Multiplexing charge as set forth in Section 14, following, will also apply.

Rates and charges for the Central Office Port are set forth in Section 14, following.

(N)

RECEIVED
JUN 1 1 2009
STATE OF ALASKA
REGULATORY COMMISSION OF ALASKA

7. Special Access Service (Cont'd)

7.9 Synchronous Optical Channel Service (Cont'd) (N)

7.9.4 Optional Features and Functions (Cont'd)

D. Shared SONET Ring Interoffice Transport

1. Shared SONET Ring Interoffice Transport (SSRIT) is a non-chargeable optional feature which provides interoffice transmission of a Synchronous Optical Channel Service over a SONET-based facility deployed in a ring configuration. Shared SONET Ring Interoffice Transport provides increased reliability and funtionality using a self-healing ring topology designed to continually monitor service quality, detect any failure within the system, and automatically self-heal within 50 milliseconds around the point of failure by switching to a protect path to ensure the flow of services between locations within the self-healing ring.

2. Shared SONET Ring Interoffice Transport is provided for the interoffice portion of Synchronous Optical Channel Service, subject to availability of SONET ring facilities. The wire centers offering Shared SONET Ring Interoffice Transport are identified in National Exchange Carrier Association, Inc., Wire Center Information, Tariff F.C.C. No 4.

3 The Shared SONET Ring Interoffice Transport optional feature may be ordered as an addition to an existing Synchronous Optical Channel Service. The customer must agree to out-of-service periods required to add this feature to an existing Synchronous Optical Channel Service. The charges for the Shared SONET Ring Interoffice Transport optional feature are set for in Section 14, following. (N)

RECEIVED
JUN 1 1 2009
STATE OF ALASKA
REGULATORY COMMISSION OF ALASKA

ACCESS SERVICES

7. Special Access Service (Cont'd)

7.11 Individual Case Filings (L)

Certain services set forth in Special Access Service, Section 7 are provided on an Individual Case Basis.

(L) Text Relocated from Sheet 196

RECEIVED
NOV 21 1990
State of Alaska
Public Utilities Commission

ACCESS SERVICES

8. Special Facilities and Specialized Services

8.1 Description

The services provided under this tariff are provided over such routes and facilities as the Telephone Company may elect. Special Facilities Routing is involved when, in order to comply with requirements specified by the customer, the Telephone Company provides Switched Access Service or Special Access Service in a manner which includes one or more of the following conditions:

8.1.1 Diversity

Two ore more circuits must be provided over not more than two different physical routes.

8.1.2 Avoidance

A circuit(s) must be provided on a route which avoids specified geographical locations.

8.1.3 Diversity and Avoidance Combined

8.1.4 Cable-Only Facilities

Certain Voice Grade services are provided on Cable-Only Facilities to meet the particular needs of a customer.

Service is provided subject to the availability of Cable-Only facilities. In the event of service failure, restoration will be made through the use of any available facilities as selected by the Telephone Company.

Avoidance and Diversity are available on Switched Access Service as set forth in Section 6 preceding; Metallic, Telegraph Grade and Voice Grade Special Access Services as set forth respectively in 7.4, 7.5 and 7.6 preceding. Cable-Only Facilities are available for Switched Access Service as set forth in Section 6. preceding and Voice Grade Special Access Services as set forth in 7.6 preceding on an Individual case Basis.

RECEIVED

JUN 1 1 2009

STATE OF ALASKA
REGULATORY COMMISSION OF ALASKA

ACCESS SERVICES

8. Special Facilities and Specialized Services

8.1 Description (Cont'd)

In order to avoid the compromise of special routing information, the Telephone Company will provide the required routing information for each specially routed service to only ordering customer. If requested by customer, this information will be provided when service is installed and prior to any subsequent changes in routing.

The rates and charges for Special Facilities Routing of Access Services are developed on an individual case basis. Such rates and charges for Special Facilities Routing of Access Services are as set forth in Section 13 and Section 14, following, and are in addition to all other rates and charges that may be applicable for services provided under other sections of this tariff. (N)

8.2 Specialized Service Or Arrangements

Specialized Service or Arrangements may be provided by the Telephone Company, at the request of a customer, on an individual case basis if such service or arrangements meet the following criteria:

- The requested service or arrangements are not offered under other sections of this tariff.
- The facilities utilized to provide the requested service or arrangements are of a type normally used by the Telephone Company in furnishing its other services.
- The requested service or arrangements are compatible with other Telephone Company services, facilities, and its engineering and maintenance practices.
- This offering is subject to the availability of the necessary Telephone Company personnel and capital resources.

RECEIVED

JUN 1 1 2009

STATE OF ALASKA
REGULATORY COMMISSION OF ALASKA

ACCESS SERVICES

8. Special Facilities and Specialized Services (Cont'd)

8.2 Specialized Service or Arrangements (Cont'd)

Rates and charges and additional regulations if applicable, for Specialized Service or Arrangements are provided on an individual case basis and are as set forth in Section 13 and Section 14, following. (N)

RECEIVED
SEP 22 1993
State of Alaska
Public Utilities Commission

ACCESS SERVICES

9. Additional Engineering, Additional Labor and Miscellaneous Services

In this section, normally scheduled working hours are an employee's scheduled work period on any given business day which totals eight (8) hours. Any additional engineering, additional labor and/or miscellaneous services requested by the customer will be billed on a time and material basis by the Telephone Company.

9.1 Additional Engineering

Additional Engineering will be provided by the Telephone Company at the request of the customer when:

(A) A customer requests additional technical information after the Telephone Company has already provided the technical information normally included on the Design Layout Report (DLR) as set forth in 6.6.7 and 7.1.5 preceding.

(B) Additional engineering time is incurred by the Telephone Company to engineer a customer's request for a customized service as set forth in 7.1.2 preceding or for Telecommunication Priority Service (C)
Set forth in 9.3.3. (C)

The Telephone Company will notify the customer that additional engineering charges will apply before any additional engineering is undertaken.

9.2 Additional Labor

Additional labor is that labor requested by the customer on a given service and agreed to by the Telephone Company. The Telephone Company will notify the customer that additional labor charges will apply before any additional labor is undertaken. Additional labor charges apply to the services described in Sections 9.2.1 through 9.2.6.

9.2.1 Overtime Installation

Overtime installation is that Telephone Company installation effort outside of normally scheduled working hours.

9.2.2 Overtime Repair

Overtime repair is that Telephone Company maintenance effort performed outside of normally scheduled working hours.

Pursuant to Orders No. 1 and No. 3 in Docket U-93-33.

RECEIVED
NOV 21 1990
State of Alaska
Public Utilities Commission

ACCESS SERVICES

9. Additional Engineering, Additional Labor and Miscellaneous Services (Cont'd)

9.2 Additional Labor (Cont'd)

9.2.3 Stand by

Stand by includes all time in excess of one-half (1/2) hour during which Telephone Company personnel stand by to make installation acceptance tests or cooperative tests with a customer.

9.2.4 Testing and Maintenance with Other Telephone Companies

Additional labor charges apply for additional testing, maintenance or repair of facilities which connect to facilities of other telephone companies. This is in addition to the normal effort required to test, maintain or repair facilities provided solely by the Telephone Company.

9.2.5 Testing Services

Testing Services other than those described in other parts of this tariff will be provided on a time and material basis, if requested by the customer. Testing will be provided subject to the availability of equipment and qualified personnel.

9.2.6 Other Labor

Other labor is that additional labor incurred to accommodate a specific customer request that involves labor which is not covered by any other section of this tariff. It also covers additional labor necessary to meet customer requests as described in Section 5. Other Labor includes, but is not limited to, the provisioning to the customer, additional or duplicate reports or documents previously provided to the customer. Charges will be developed on a time and material basis.

Pursuant to orders No. 6 & 7 in Docket U-90-26

RECEIVED
NOV 21 1990
State of Alaska
Public Utilities Commission

TELEPHONE EXCHANGE CARRIERS OF ALASKA

ACCESS SERVICES

9. Additional Engineering, Additional Labor and Miscellaneous Services (Cont'd)

9.3 Miscellaneous Services

9.3.1 Testing Services

Testing Services offered under this section of the tariff are optional and will be billed to the customer on a time and material basis by the Telephone Company. Other testing services, as described in 6.6.8 preceding, are provided by the Telephone Company in association with Access Services and are furnished at no additional charge.

Testing services are normally provided by Telephone Company personnel at Telephone Company locations. However, provisions are made in (B)(2) following for a customer to request Telephone Company personnel to perform testing services at the customer designated premises.

The offering of Testing Services under this section of the tariff is made subject to the availability of the necessary qualified personnel and test equipment at the various test locations mentioned in (A) and (B) following.

(A) Switched Access Service

Testing Services for Switched Access are comprised of (a) tests which are performed during the installation of a Switched Access Service, i.e. Acceptance Tests, (b) tests which are performed after customer acceptance of such access services and which are without charge i.e., routine testing and (c) additional tests which are performed during or after customer acceptance of such access services and for which additional charges apply, i.e., Additional Cooperative Acceptance Tests and in-service tests.

Pursuant to Orders No. 6 & 7 in Docket U-90-26

RECEIVED
NOV 21 1990
State of Alaska
Public Utilities Commission

ACCESS SERVICES

9. Additional Engineering, Additional Labor and Miscellaneous Services (Cont'd)

9.3 Miscellaneous Services (Cont'd)

9.3.1 Testing Services (Cont'd)

(A) Switched Access Service (Cont'd)

Routine tests are those tests performed by the Telephone Company on a regular basis, as set forth in 6.6.8 preceding which are required to maintain Switched Access Service. Additional in-service tests may be done on an automatic basis (no Telephone Company or customer technicians involved), on a manual basis (Telephone company technician(s) involved at Telephone Company office(s) and Telephone company or customer technician(s) involved at the customer designated premises).

Testing services are ordered to the Dial Tone Office for FGA, to the access tandem or end office for FGB (wherever the FGB service is ordered) and to the end office for FGs C and D. Testing Services for Directory Assistance Service not routed through an access tandem is ordered to a Directory Assistance Location for each NPA.

(1) Additional Cooperative Acceptance Testing

Additional Cooperative Acceptance Testing of Switched Access Service involves the Telephone Company provision of a technician at its office(s) and the customer provision of a technician at its premises, with suitable test equipment to perform the required tests.

Additional Cooperative Acceptance Tests may, for example, consist of the following tests:

- Impulse Noise
- Phase Jitter
- Signal to C-Notched Noise Ratio
- Intermodulation (Nonlinear) Distortion
- Frequency Shift (Offset)
- Envelope Delay Distortion
- Dial Pulse Percent Break

RECEIVED

APR 25 2014

STATE OF ALASKA
REGULATORY COMMISSION OF ALASKA

ACCESS SERVICES

9. Additional Engineering, Additional Labor and Miscellaneous Services (Cont'd)

9.3 Miscellaneous Services

9.3.1 Testing Services (Cont'd)

A. Switched Access Service (Cont'd)

2. Additional Automatic Testing

Additional Automatic Testing (AAT) of Switched Access Services (Feature Groups B, C and D), is a service where the customer provides remote office test lines and 105 test lines with associated responders or their functional equivalent. The customer may order, at additional charges, gain-slope and C-notched noise testing and may order the routine tests (1004 Hz loss, C-Message Noise and Balance) on an as needed or more than routine schedule.

The Telephone Company will provide an AAT report that lists the test results for each trunk tested. Trunk test failures requiring customer participation for trouble resolution will be provided to the customer on an as-occurs basis.

The Additional Tests, (i.e., gain slope, C-notched noise, 1004 Hz loss, C-message noise and balance) may be ordered by the customer at additional charges, 60 days prior to the start of the customer prescribed schedule. The (C) (D)
rates for Additional Automatic Tests are as set forth in 13.5.3(B) following. (C)(D)

(D)

RECEIVED
NOV 21 1990
State of Alaska
Public Utilities Commission

ACCESS SERVICES

9. Additional Engineering, Additional Labor and Miscellaneous Services (Cont'd)

9.3 Miscellaneous Services (Cont'd)

9.3.1 Testing Services (Cont'd)

(A) Switched Access Service (Cont'd)

(3) Additional Manual Testing

Additional Manual Testing (AMT) of Switched Access Services (Feature Groups A, B, C, and D and Directory Access Service not routed through an access tandem), is a service where the Telephone Company provided a technician at its office(s) and the Telephone Company or customer provides a technician at the customer designated premises, with suitable test equipment to perform the required tests. Such additional tests will normally consist of gain-slope and C-notched noise testing. However, the Telephone Company will conduct any additional tests which the IC may request.

The Telephone Company will provide an AMT report listing the test results for each trunk tested. Trunk test failures requiring customer participation for trouble resolution will be provided to the customer on a per occurrence basis.

The Additional Manual Tests may be ordered by the customer at additional charges, 60 days prior to the start of the testing schedule as mutually agreed to by the customer and the Telephone Company.

Additional Manual Tests will be provided on a time and material basis and billed to the customer by the Telephone Company.

RECEIVED
NOV 21 1990
State of Alaska
Public Utilities Commission

ACCESS SERVICES

9. Additional Engineering, Additional Labor and Miscellaneous Services (Cont'd)

9.3 Miscellaneous Services (Cont'd)

9.3.1 Testing Services (Cont'd)

(A) Switched Access Service (Cont'd)

(4) Obligations of the Customer

(A) The customer shall provide the Remote Office Test Line priming data to the Telephone Company, as appropriate, to support routine testing as set forth in 6.6.8 preceding or AAT as set forth in 9.3.1 preceding.

(B) The customer shall make the facilities to be tested available to the Telephone Company at times mutually agreed upon.

Pursuant to Orders No. 6 & 7 in Docket U-90-26

RECEIVED
NOV 21 1990
State of Alaska
Public Utilities Commission

ACCESS SERVICES

9. Additional Engineering, Additional Labor and Miscellaneous Services (Cont'd)

9.3 Miscellaneous Services (Cont'd)

9.3.1 Testing Services (Cont'd)

(B) Special Access Service

The Telephone Company will provide assistance in performing specific tests requested by the customer.

(1) Additional Cooperative Acceptance Testing

When a customer provides a technician at its premises or at an end user's premises, with suitable test equipment to perform the requested tests, the Telephone Company will provide a technician at its office for the purpose of conducting Additional Cooperative Acceptance Testing on Voice Grade Services. At the customer's request, the Telephone Company may provide a technician at the customer's premises or at the end user premises. These tests may, for example, consist of the following:

- Attenuation Distortion (i.e., frequency response)
- Intermodulation Distortion (i.e., harmonic distortion)
- Phase Jitter
- Impulse Noise
- Envelope Delay Distortion
- Echo Control
- Frequency Shift

Pursuant to Orders No. 6 & 7 in Docket U-90-26

RECEIVED
NOV 21 1990
State of Alaska
Public Utilities Commission

ACCESS SERVICES

9. Additional Engineering, Additional Labor and Miscellaneous Services (Cont'd)

9.3 Miscellaneous Services (Cont'd)

9.3.1 Testing Services (Cont'd)

(B) Special Access Service (Cont'd)

(2) Additional Manual Testing

The Telephone Company will provide a technician at its premises, and the Telephone Company or customer will provide a technician at the customer's designated premises with suitable test equipment to perform the requested tests.

(3) Obligation of the Customer

When the customer subscribes to Testing Service as set forth in this section, the customer shall make the facilities to be tested available to the Telephone Company at time mutually agreed upon.

Pursuant to Orders No. 6 & 7 in Docket U-90-26

CEIVED
SEP 0 8 1993
e of Alaska
blic Utilities Commission

TELEPHONE EXCHANGE CARRIERS OF ALASKA

ACCESS SERVICES

9. Additional Engineering, Additional Labor and Miscellaneous Services (Cont'd)

9.3 Miscellaneous Services (Cont'd)

9.3.2 Maintenance of Service

(A) When a customer reports a trouble to the Telephone Company for clearance and no trouble is found in the Telephone Company's facilities, the customer shall be responsible for payment of a Maintenance of Service charge developed on a time and material basis for the period of time from when Telephone Company personnel are dispatched, at the request of the customer, to the customer designated premises to when the work is completed. Failure of Telephone Company personnel to find trouble in Telephone Company facilities will result in no charge if the trouble is actually in those facilities, but not discovered at the time.

(B) The customer shall be responsible for payment of a Maintenance of Service charge when the Telephone Company dispatches personnel to the customer designated premises, and the trouble is in equipment or communications systems provided by other than the Telephone Company or in detariffed CPE provided by the Telephone Company.

In either (A) or (B) preceding, no credit allowance will be applicable for the interruption involved if the Maintenance of Service Charge applies.

(D)

(D)

Pursuant to Orders No. 1 and No. 3, Docket U-93-33.

Tariff Advice No. 15 Effective: April 30, 1993

Issued: _____
Issued By: Alaska Exchange Carriers Association, Inc.
By: _____ Title: President

RECEIVED
SEP 08 1993
State of Alaska
Public Utilities Commission

9. Additional Engineering, Additional Labor and Miscellaneous Services (Cont'd)

9.3 Miscellaneous Services (Cont'd)

9.3.3 Telecommunications Service Priority - TSP (N)

(A) Priority installation and/or restoration of National Security Emergency Preparedness (NSEP) telecommunications service shall be provided in accordance with Part 64.401, Appendix A, of the Federal Communications Commission's (FCC's) Rules and Regulations.

In addition, TSP System service shall be provided in accordance with the guidelines set forth in "Telecommunications Service Priority (TSP) System for National Security Emergency Preparedness (NSEP) Service Vendor Handbook" (NCSH 3-1-2) dated July 9, 1990, and "Telecommunication Service Priority System for National Security Emergency Preparedness Service User Manual" (NCSM 3-1-1).

The TSP System is a service, developed to meet the requirements of the Federal Government, as specified in the Service Vendor's Handbook and Service User's Manual which provides the regulatory, administrative and operational framework for the priority installation and/or restoration of NSEP telecommunications services. These include both Switched and Special Access Services. The TSP System applies only to NSEP telecommunications services, and requires and authorizes priority action by the Telephone Company providing such services.

(N)

Pursuant to Orders No. 1 and No. 3, Docket U-93-33.

RECEIVED
SEP 08 1993
State of Alaska
Public Utilities Commission

9. Additional Engineering, Additional Labor and Miscellaneous Services (Cont'd)

9.3 Miscellaneous Services (Cont'd)

9.3.3 Telecommunications Service Priority - TSP (N)

(A) (Cont'd)

For Switched Access Service, the TSP System's applicability is limited to those services which the Telephone Company can discretely identify for priority provisioning and/or restoration.

(B) A Telecommunications Service Priority charge applies as set forth in 13.2.1 when a request to provide or change a Telecommunications Service Priority is received subsequent to the issuance of an Access Order to install the service.

A Telecommunications Service Priority charge does not apply when a Telecommunications Service Priority is discontinued or when ordered coincident with an Access Order to install or change service.

A Miscellaneous Service Order Charge as set forth in 13.2.1 will apply to Telecommunications Service Priority requests that are ordered subsequent to the initial installation of the associated access service. (N)

Purusant to Orders No. 1 and No. 3, Docket U-93-33.

RECEIVED

JUN 1 1 2009

STATE OF ALASKA
REGULATORY COMMISSION OF ALASKA

ACCESS SERVICES

9. Additional Engineering, Additional Labor and Miscellaneous Services (Cont'd)

9.3 Miscellaneous Services (Cont'd)

9.3.3 Telecommunications Service Priority - TSP

B. (Cont'd)

Time and Materials charges may be applicable when provisioning or restoring Switched or Special Access Services with Telecommunications Service Priority and will be billed to the Customer by the Telephone Company, in accordance with Section 9, Section 13.5, and Section 14, following* (N)

A Telecommunications Service Priority monthly charge will apply as set forth in Section 13.2.2 and Section 14, following, to monitor and maintain database accuracy. (TSP Database Charge). (N)

When the Customer requests an audit or a reconciliation of the Telephone Company's Telecommunications Service Priority records, a Miscellaneous Service Order charge as set forth in Section 13.2.1 and Section 14, following, will be applied. Additional Labor rate charges, if applicable, will be billed to the customer by the Telephone Company. (N)

C. Charges for Special Access Service are shown in Section 13.3.1 and Section 14, following. (N)

* Any company specific time and materials charges for TSP access not expressly shown in this tariff will be identified by the utility prior to commencement of service. All such access rates are subject to RCA approval. (C)

RECEIVED
MAR 09 1992
State of Alaska
Public Utilities Commission

ACCESS SERVICES

9. Additional Engineering, Additional Labor and Miscellaneous Services (Cont'd)

9.3 Miscellaneous Services (Cont'd)

(D)

(D)

9.3.4 Access to Intrastate Interexchange Carriers (D) (N)

Local exchange carriers will provide equal access interconnection to intrastate interexchange carriers according to the procedures and schedules identified in this section. Presubscription and access rules applicable to end users are also explained in this section. Presubscription is the process by which end users may select and designate to the Telephone Company an IC to access, without an access code, for interexchange calls. Depending upon availability, the end user may presubscribe to different ICs for interstate and intrastate calls. (C) (C)

A. A local exchange carrier providing service to an exchange in a location identified in 3 AAC 52.355(a)(1) shall install and maintain plant, equipment, and facilities necessary to provide 2-PIC dialing in that exchange upon receipt of a bona fide request for interconnection. (L) (N)

B. If a local exchange carrier receives a bona fide request for interconnection in a location identified in 3 AAC 52.355(a) (1) in an exchange where interstate equal access is currently provided, it shall implement 2-PIC dialing in that exchange within 90 days after receipt of that request. Upon implementation of 2-PIC dialing, the access line or lines of each end user will be presubscribed to the incumbent carrier until the local exchange carrier receives authorization from the end user changing presubscription for an access line or lines to another certificated intrastate interexchange carrier. (L) (N)

(L) Text relocated to Original Sheet No. 212.3

RECEIVED
MAR 09 1992
State of Alaska
Public Utilities Commission

ACCESS SERVICES

9. Additional Engineering, Additional Labor and Miscellaneous Services (Cont'd)

9.3 Miscellaneous Services (Cont'd)

9.3.4 Access to Intrastate Interexchange Carriers (Cont'd)

C. If a local exchange carrier desires a waiver of Part B. of this section, it must file a motion with APUC for that waiver within 30 days after receipt of the bona fide request for interconnection and include a schedule that states when 2-PIC dialing can be provided, the financial and technical basis for the waiver request, and a proposed public notice of the interim dialing arrangements. The proposed public notice must explain the 1-PIC dialing arrangements, list carriers available to provide both interstate and intra-state interexchange service, and describe the actions necessary to change a presubscribed access line to a different interstate interexchange carrier. (N)

D. If a waiver of Part B. of this section is granted by the APUC then the local exchange carrier shall implement 1-PIC dialing for the period prior to 2-PIC implementation in accordance with the following rules:

1. Within 14 days after Commission approval of a waiver and associated public notice, the local exchange carrier shall mail copies of the approved notice to its end users. Each intrastate interexchange carrier listed on the notice will be billed by the local exchange carrier for an equal share of the cost of noticing.

2. The local exchange carrier shall implement 1-PIC dialing 45 days after Commission approval of the waiver.

3. Unless otherwise requested by the end user, upon conversion to 1-PIC, an end user's interstate carrier will automatically become the end user's primary carrier processing both interstate and intrastate calls.

a. New end users in 1-PIC areas must choose the same IC for both intrastate and interstate calls. (N)

RECEIVED
MAR 0 9 1992
State of Alaska
Public Utilities Commission

ACCESS SERVICES

9. Additional Engineering, Additional Labor and Miscellaneous Services (Cont'd)

9.3 Miscellaneous Services (Cont'd)

9.3.4 Access to Intrastate Interexchange Carriers (Cont'd)

E. If a local exchange carrier receives a bona fide request for interconnection in a location identified in 3 ACC 52.355(a) (1) but in which interstate equal access is not currently available, it shall provide 2-PIC dialing at the same time and on the same schedule as required by the Federal Communications Commission for the implementation of interstate equal access. In this event, presubscription balloting for intrastate interexchange carriers will be conducted in coordination with balloting for interstate interexchange carriers. (N)

1. At least 45 days in advance of the mailing of interstate interexchange presubscription ballots, a local exchange carrier shall file with the APUC for review and approval a proposed intrastate interexchange presubscription ballot that lists the available intrastate interexchange carriers. The ballot must clearly state that an end user may select different interexchange carriers for intrastate and interstate interexchange services.

2. Pending the conversion to 2-PIC access, 1-plus and no-plus intrastate interexchange calls must be routed to the incumbent carrier. Other intrastate interexchange carriers shall obtain access through Feature Group A or Feature Group B without discount, or through the incumbent carrier's 2-PIC equal access tandem. (N)

RECEIVED

AUG 1 9 2009

STATE OF ALASKA
REGULATORY COMMISSION OF ALASKA

9. Additional Engineering, Additional Labor and Miscellaneous Services (Cont'd)

9.3 Miscellaneous Services (Cont'd)

9.3.4 Access to Intrastate Interexchange Carriers (Cont'd)

3. On the effective date of this tariff, all existing end users have access to intrastate MTS/WATS. No later than 85 days prior to conversion to Feature Group D in a serving end office, the Telephone Company will notify end users of the availability of equal access in their particular area. The notification will include the intrastate ballot identified in section 9.3.4(e)(1). This notification will be sent via U.S. Mail to each end user of record served by the end office to be converted.

4. End users may select one of the following options at no charge:

- a primary interstate IC or No PIC for all of its lines, (C)
- a primary intrastate IC or No PIC for all of its lines,
- a different interstate IC or No PIC for each of its lines,
- a different intrastate IC or No PIC for each of its lines. (C)

Only one interstate or intrastate IC may be selected for each line or lines terminating in the same hunt group

RECEIVED

JUL 29 2009

STATE OF ALASKA
REGULATORY COMMISSION OF ALASKA

9. Additional Engineering, Additional Labor and Miscellaneous Services (Cont'd)

9.3 Miscellaneous Services (Cont'd)

9.3.4 Access to Intrastate Interexchange Carriers (Cont'd)

4. (Cont'd)

End users may designate that they do not want to presubscribe to any IC. The end user must arrange this designation by directly notifying the local exchange carrier's business office. This choice will require the end user to dial an access code (10XXX) for all interstate or intrastate calls.

After the end user's initial selection of a predesignated IC or the designation that they do not want to presubscribe to any IC, for any change in selection after conversion to Equal Access in the serving end office, a nonrecurring charge, as set forth in 13.2.4 following applies.

5. End users not responding to the initial notification will be sent a second notification for the selection of a predesignated IC no earlier than 40 days prior to or no later than 90 days after the conversion to Equal Access in a serving end office. This second notification will indicate the default option of No-PIC will be assigned to them if they fail to respond to the second notification. (C)

End users assigned to a No-PIC by default may change their No-PIC one time within six months after conversion to Equal Access in the serving end office at no charge. (N) (D)

Following the six month period after conversion to Equal Access for any change in selection, a nonrecurring charge as set forth in 13.2.4 following, applies.

RECEIVED
MAR 0 9 1992
State of Alaska
Public Utilities Commission

ACCESS SERVICES

9. Additional Engineering, Additional Labor and Miscellaneous Services (Cont'd)

9.3 Miscellaneous Services (Cont'd) (D)(N)

9.3.4 Access to Intrastate Interexchange Carriers (Cont'd)

6. When an end user indicates more than one IC selection on the return notification or returns an illegible return notification, the Telephone Company will contact the end user for clarification. If the end user indicates an IC selection on the return notification that does not match with information provided by an IC and both notifications indicate the same authorization date, the end user's notification takes precedence and the Telephone Company will process the end user's selection. In the event that two or more ICs provide to the Telephone Company notifications with the same authorization date and neither notification has been processed, the Telephone Company will contact the end user for clarification. A list of these customers in conflict must be sent to the affected IC by the Telephone Company. (C)

In the event that two or more ICs have provided to the Telephone Company notifications with the same authorization date(s), and one IC notification has already been processed by the Telephone Company, those IC notifications not yet processed would be returned to the ICs.

F. New end users who are served by end offices equipped with Feature Group D will be asked to presubscribe to an IC at the time they place an order with the Telephone Company for Telephone Exchange Service. New end users in 2-PIC areas may select from the following options at no charge: (C) (C) (C)

- a primary interstate IC for all of its lines, (C)
- a primary intrastate IC for all of its lines, (C)
- a different interstate IC for each of its lines, (N)
- a different intrastate IC for each of its lines. (N)

Issued: _____
Issued By: Alaska Exchange Carriers Association, Inc.
By: _____ Title: President

RECEIVED
MAR 09 1992
State of Alaska
Public Utilities Commission

ACCESS SERVICES

9. Additional Engineering, Additional Labor and Miscellaneous Services (Cont'd)

9.3 Miscellaneous Services (Cont'd) (D)(N)

9.3.4 Access to Intrastate Interexchange Carriers (Cont'd)

F. (Cont'd) (C)

Only one interstate IC and one intrastate IC may be selected for each individual line, or lines terminating in the same hunt group. (C)

In an area where waiver of 2-PIC requirements has been granted, the provisions of Section 9.3.4(D) apply. (N)

Subsequent to the installation of Telephone Exchange Service and after the end user's initial selection of predesignated IC(s), for any change in selection, a nonrecurring charge, as set forth in 13.2.4 following, applies. (C)

G. If the new end user fails to designate the ICs as its predesignated ICs prior to the date of installation of Telephone Exchange Service, the Telephone Company will (1) allocate the end user to ICs based upon current presubscription ratios, or (2) require the end user to dial an access code (10XXX) for all intrastate calls. The end user will be notified which option will be applied if they fail to presubscribe to ICs. An allocated end user may designate another, or initial, IC as its predesignated IC one time at no charge, if it is requested within six months after the installation of Telephone Exchange Service. (C)

For any change in selection after six months from the installation of Telephone Exchange Service, a nonrecurring charge, as set forth in 13.2.4 following applies.

RECEIVED
SEP 28 1992
State of Alaska
Public Utilities Commission

TELEPHONE EXCHANGE CARRIERS OF ALASKA

ACCESS SERVICES

9. Additional Engineering, Additional Labor and Miscellaneous Services (Cont'd)

9.3 Miscellaneous Services (Cont'd)

9.3.4 Access to Intrastate Interexchange Carriers (Cont'd)

H. If an IC elects to discontinue its Feature Group D Service offering prior to or within 2 years of the conversion, the IC will notify the local exchange carrier of the cancellation. The IC will also notify all end users which selected them that they are cancelling their service and that they should contact the Telephone Company to select a new primary IC. The IC will also inform the end user that it will pay the presubscription change charge. The cancelling IC will then be billed by the local exchange carrier the appropriate charge for each end user for a period of two years from the discontinuance of Feature Group D service.

I. Customer Notice of Access Options and Presubscription

1. For a period of three years after a local exchange telephone carrier initially provides 2-PIC dialing, it must annually include in its periodic billings or in a separate mailing a notice to end users listing available intrastate interexchange carriers and explaining the actions that must be taken to change carriers and the cost of making the change. Each intrastate interexchange carrier listed on the notice will be billed by the local exchange carrier for an equal share of the cost of noticing.

2. A local exchange carrier may not reassign an end user's access line or lines to a different intrastate carrier unless either the end user has signed a written request for the change or the local exchange carrier has verifiable direct contact with the end user. A copy of the written request will suffice as a basis for reassigning an end user, so long as the LEC is immediately provided with the original written request in the event of a disputed reassignment. (N) (N)

Pursuant to Order No. 3 in Docket U-92-22

Tariff Advice _____ Effective: September 3, 1992

Issued: _____
Issued By: Alaska Exchange Carriers Association, Inc.
By: _____ Title: President

RECEIVED
AUG 21 1995
State of Alaska
Public Utilities Commission

ACCESS SERVICES

9. Additional Engineering, Additional Labor and Miscellaneous Services (Cont'd)

9.3 Miscellaneous Service (Cont'd) (N)

9.3.5 Blocking Service

A. 900 Blocking Service

The Telephone Company will provide 900 Blocking Service to customers who obtain intrastate Feature Group A Switched Access service under this tariff. This service is only provided at appropriately equipped end offices. Those offices providing 900 Blocking Service are identified in NATIONAL EXCHANGE CARRIERS ASSOCIATION, INC. TARIFF F.C.C. NO. 4.

On each line for which 900 Blocking Service is ordered, the Telephone Company will block all direct dialed calls placed to a 900 number. When capable, the Telephone Company will route the blocked calls to a recorded message.

900 Blocking Service is provided free of charge to subscribers. However, when a subscriber requests to end the 900 Blocking Service, the Miscellaneous Service Order charge will apply. The charge does not apply when blocking is removed from a Feature Group A Switched Access line at the same time it is disconnected. (N)

RECEIVED
NOV 21 1990
State of Alaska
Public Utilities Commission

TELEPHONE EXCHANGE CARRIERS OF ALASKA

ACCESS SERVICES

9. Additional Engineering, Additional Labor and Miscellaneous Services (Cont'd)

RESERVED FOR FUTURE USE

Pursuant to Orders No. 6 & 7 in Docket U-90-26

RECEIVED
DEC 20 1990
State of Alaska
Public Utilities Commission

ACCESS SERVICES

10. Special Construction

10.1 General

This section addresses special construction of Telephone Company facilities which are used to provide services offered under this tariff.

When special construction is required as described in 10.2 following, the provisions of this section apply in addition to regulations, rates, and charges set forth in other sections of this tariff.

Charges will be computed for each specific application of Special Construction. The customer will provide written authorization to the Telephone Company prior to the commencement of any Special Construction. The computed charges for Special Construction will be based upon time and materials. The Telephone Company will notify the customer when Special Construction is required. A deposit of fifty percent (50%) of the Telephone Company estimated costs will be required before the commencement of construction. The balance will be due upon completion.

10.2 Conditions Requiring Special Construction

Special construction is required when suitable facilities are not available to meet a customer's order for service and one or more of the following conditions exist:

- The Telephone Company has no other requirement for the facilities constructed at the customer's request;
- The customer requests that service be furnished using a type of facility, or via a route, other than that which the Telephone Company would otherwise utilize in furnishing the requested service;
- The customer requests the construction of more facilities than are required to satisfy its order for service;
- The customer requests construction be expedited resulting in added cost to the Telephone Company;

Pursuant to Orders No. 6 & 7 in Docket U-90-26

RECEIVED
NOV 21 1990
State of Alaska
Public Utilities Commission

TELEPHONE EXCHANGE CARRIERS OF ALASKA

ACCESS SERVICES

10. Special Construction

RESERVED FOR FUTURE USE

Pursuant to Orders No. 6 & 7 in Docket U-90-26

RECEIVED
NOV 21 1990
State of Alaska
Public Utilities Commission

TELEPHONE EXCHANGE CARRIERS OF ALASKA

ACCESS SERVICES

10. Special Construction

RESERVED FOR FUTURE USE

Pursuant to Orders No. 6 & 7 in Docket U-90-26

RECEIVED
NOV 21 1990
State of Alaska
Public Utilities Commission

ACCESS SERVICES

11. Access Service Interfaces and Transmission Specifications

11.1 contains Switched Access Service Options (which are comprised of Interface Groups, Supervisory Signaling, Entry Switch Receive Level and Local Transport Termination) and Transmission Specifications. 11.2 describes Special Access Service Network Channel (NC) codes and Network Channel Interface (NC) codes.

11.1 Switched Access Service

Ten Interface Groups are provided for terminating the Transport at the customer's designated premises. Each Interface Group provides a specified premises interface (e.g., two-wire, four-wire, DS1, etc.). Where transmission facilities permit, the individual transmission path between the customer's designated premises and the first point of switching may, at the option of the customer, be provided with optional features as set forth in 11.1.1 following.

As a result of the customer's access order and type of Telephone Company transport facilities serving the customer designated premises, the need for signaling conversions or two-wire to four-wire conversions, or the need to terminate digital or high frequency facilities in channel bank equipment may require that Telephone Company equipment be placed at the customer designated premises. For example, if a voice frequency interface is ordered by the customer and the Telephone Company facilities serving the customer designated premises are digital, then Telephone Company channel bank equipment must be placed at the customer designated premises in order to provide the voice frequency ordered by the customer.

11.1.1 Transport Interface Groups

Interface Groups are combinations of technical parameters which describe the Telephone Company handoff at the point of termination at the customer designated premises. The technical specifications concerning the available interface groups are set forth in (A) through (D) following.

RECEIVED
NOV 21 1990
State of Alaska
Public Utilities Commission

ACCESS SERVICES

11. Access Service Interfaces and Transmission Specifications (Cont'd)

11.1 Switched Access Service (Cont'd)

11.1.1 Transport Interface Groups (Cont'd)

Interface Group 1 is provided with Type C Transmission Specifications, as set forth in 11.1.2(C) following, and Interface Groups 2 through 10 are provided with Type A or B Transmission Specifications, as set forth respectively in 11.1.2(E) and (F) following, depending on the Feature Group and whether the Access Service is routed directly or through an access tandem. All Interface Groups are provided with Data Transmission Parameters.

Only certain premises interfaces are available at the customer designated premises. The premises interfaces associated with the Interface Groups may vary among Feature Groups.

(A) Interface Group 1

Interface Group 1, except as set forth in the following, provides two-wire voice frequency transmission at the point of termination at the customer designated premises. The interface is capable of transmission of voice and associated telephone signals within the frequency bandwidth of approximately 300 to 3000 Hz.

Interface Group 1 is not provided in association with FGC and FGD when the first point of switching is an access tandem. In addition, Interface Group 1 is not provided in association with FGB, FGC or FGD when the first point of switching provides only four-wire terminations.

Pursuant to Orders No. 6 & 7 in Docket U-90-26

RECEIVED
NOV 21 1990
State of Alaska
Public Utilities Commission

ACCESS SERVICES

11. Access Service Interfaces and Transmission Specifications (Cont'd)

11.1 Switched Access Service (Cont'd)

11.1.1 Transport Interface Groups (Cont'd)

(A) Interface Groups 1 (Cont'd)

The transmission path between the point of termination at the customer designated premises and the first point of switching may be comprised of any form or configuration of plant capable of and typically used in the telecommunications industry for the transmission of voice and associated telephone signals within the frequency bandwidth of 300 to 3000 Hz.

The interface is provided with loop supervisory signaling. When the interface is associated with FGA, such signaling will be loop start or ground start signaling. When the interface is associated with FGB, FGC, or FGD, such signaling except for two-way calling which is E&M signaling, will be reverse battery signaling.

(B) Interface Group 2

Interface Group 2 provides four-wire voice frequency transmission at the point of termination at the customer designated premises. The interface is capable of transmission of voice and associated telephone signals within the frequency bandwidth of approximately 300 to 3000 Hz.

The transmission path between the point of termination at the customer designate premises and the first point of switching may be comprised of any form or configuration of plant capable of and typically used in the telecommunications industry for the transmission of voice and associated telephone signals within the frequency bandwidth of approximately 300 to 3000 Hz.

RECEIVED
NOV 21 1990
State of Alaska
Public Utilities Commission

ACCESS SERVICES

11. Access Service Interfaces and Transmission Specifications (Cont'd)

11.1 Switched Access Service (Cont'd)

11.1.1 Transport Interface Groups (Cont'd)

(B) Interface Group 2 (Cont'd)

The interface is provided with loop supervisory signaling. When the interface is associated with FGA, such signaling will be loop start or ground start signaling. When the interface is associated with FGB, FGC, or FGD, such signaling, except for two-way calling which is E&M signaling, will be reverse battery signaling.

(C) Interface Groups 3 through 5

Interface Groups 3 through 5 provide analog transmission at the point of termination at the customer designated premises. The various interfaces are capable of transmitting electrical signals at the frequencies illustrated following, with the capability to channelize voice frequency transmission paths. Certain frequencies within the bandwidth of the Interface Groups are reserved for Telephone Company use, e.g., pilot and carrier group alarm tones. Before the first point of switching, the Telephone Company will provide multiplex equipment to derive the transmission paths of frequency bandwidth of approximately 300 to 3000 Hz.

The interfaces are provided with individual transmission path SF supervisory signaling.

Interface Group Identification No.	Transmission Frequency Bandwidth	Analog Hierarch Level	Maximum No. of Channelized Voice Freq. Trans. Paths
3	60-108 kHz	Group	12
4	312-552 kHz	Supergroup	60
5	564-3084 kHz	Mastergroup	600

RECEIVED
NOV 21 1990
State of Alaska
Public Utilities Commission

ACCESS SERVICES

11. Access Service Interfaces and Transmission Specifications (Cont'd)

11.1 Switched Access Service (Cont'd)

11.1.1 Transport Interface Groups (Cont'd)

(D) Interface Groups 6 through 10

Interface Groups through 10 provide digital transmission at the point of termination at the customer designated premises. The various interfaces are capable of transmitting electrical signals at the nominal bit rates illustrated following, with the capability to channelize voice frequency transmission paths. Before the first point of switching, when analog switching utilizing analog terminations is provided, the Telephone Company will provide multiplex and channel bank equipment to derive transmission paths of a frequency bandwidth of approximately 300 to 3000 Hz. When digital switching or analog switching with digital carrier terminations is provided, the Telephone Company will provide, at the first point of switching, a DS1 signal(s) in D3/D4 format.

The interfaces are provided with individual transmission path bit stream supervisory signaling.

Interface Group Identification No.	Nominal Bit Rate (Mbps)	Digital Hierarchy Level	Max No. of Channelized Voice Freq. Trans. Paths
6	1.544	DS1	24
7	3.152	DS1C	48
8	6.312	DS2	96
9	44.736	DS3	672
10	274.176	DS4	4032

Pursuant to Orders No. 6 & 7 in Docket U-90-26

RECEIVED
NOV 21 1990
State of Alaska
Public Utilities Commission

ACCESS SERVICES

11. Access Service Interfaces and Transmission Specifications (Cont'd)

11.1 Switched Access Service (Cont'd)

11.1.1 Transport Interface Groups (Cont'd)

(E) Transport Optional Features

Where transmission facilities permit, the Telephone Company will, at the option of the customer, provide the following features in association with Transport. An Access Order Charge is applicable on a per order basis when nonchargeable optional features are added subsequent to the installation of service.

- Customer Specified Entry Switch Receive Level

  Customer Specified Entry Switch Receive Level allows the customer to specify the receive transmission level at the first point of switching. The range of transmission levels which may be specified is described in Technical Reference TR-NPL-000334. This feature is available with Interface Groups 2 through 10 for Feature Groups A and B.

- Customer Specification of Transport Termination

  Customer Specification of Transport Termination allows the customer to specify, for Feature Group B routed directly to an end office or access tandem, a four-wire termination of the Transport at the first point of switching in lieu of a Telephone Company selected two-wire termination. This option is available only when the Feature Group B arrangement is provided with Type B Transmission Specifications.

- Supervisory Signaling

  Supervisory Signaling allows the customer to order an optional supervisory signaling arrangement for each transmission path provided where the transmission parameters permit, and where signaling conversion is required by the customer to meet its signaling capability.

Pursuant to Orders No. 6 & 7 in Docket U-90-26

RECEIVED
NOV 21 1990
State of Alaska
Public Utilities Commission

ACCESS SERVICES

11. Access Service Interfaces and Transmission Specifications (Cont'd)

11.1 Switched Access Service (Cont'd)

11.1.1 Transport Interface Groups (Cont'd)

(E) Transport Optional Features (Cont'd)

The Interface Groups, as described in (A) through (D) preceding, represent industry standard arrangements. Where transmission parameters permit, the customer may select the following optional signaling arrangements in place of signaling arrangements standardly associated with the Interface Groups.

- For Interface Groups 1 and 2 associated with FGB, FGC, or FGD

  DX Supervisory Signaling
  E&M Type I Supervisory Signaling,
  E&M Type II Supervisory Signaling, or
  E&M Type III Supervisory Signaling

- For Interface Group 2 associated with FGB, FGC, or FGD and in addition to the preceding.

  SF Supervisory Signaling, or
  Tandem Supervisory Signaling

- For Interface Groups 3 through 5

  Optional Supervisory Signaling Not Available

- For Interface Groups 6 through 10

  These Interface Groups may, at the option of the customer, be provided with individual transmission path SF supervisory signaling where such signaling is available in Telephone Company central offices. Generally such signaling is available only where the first point of switching provides an analog (i.e., non digital) interface to the transport termination.

  Additionally, in (F) following, there is a matrix of available Premises Interface Codes as a function of Interface Group, Telephone Company Switch ~~Supervisory Signaling and Feature Group.~~

RECEIVED
NOV 21 1990
State of Alaska
Public Utilities Commission

ACCESS SERVICES

11. Access Service Interfaces and Transmission Specifications (Cont'd)

11.1 Switched Access Service (Cont'd)

11.1.1 Transport Interface Groups (Cont'd)

(F) Available Premises Interface Codes

Following is a matrix showing premises interface codes which are available for each Interface Group. Their availability is a function of the Telephone Company switch supervisory signaling and Feature Group. For explanations of these codes, see the Parameter Codes and Options as set forth in 11.2.2(A) following.

Interface Group	Telephone Company Switch Supervising Signaling	Premises Interface Code	Feature Group A	B	C	D
1	LO	2LS2	X			
	LO	2LS3	X			
	GO	2GS2	X			
	GO	2GS3	X			
	LO, GO,	2DX3	X			
	LO, GO	4EA3-E	X			
	LO, GO	4EA3-M	X			
	LO, GO	6EB3-E	X			
	LO, GO	6EB3-M	X			
	RV, EA, EB, EC	2DX3		X	X	X
	RV, EA, EB, EC	4EA3-E		X	X	X
	RV, EA, EB, EC	4EA3-M		X	X	X
	RV, EA, EB, EC	6EB3-E		X	X	X
	RV, EA, EB, EC	6EB3-M		X	X	X
	EA, EB, EC	6EC3			X	X
	RV	2RV3-0		X	X	X
	RV	2RV3-T		X	X	X
2	LO, GO	4SF2	X			
	LO, GO	4SF3	X			
	LO	4LS2	X			
	LO	4LS3	X			
	LO	6LS2	X			

Pursuant to Orders No. 6 & 7 in Docket U-90-26

RECEIVED
NOV 21 1990
State of Alaska
Public Utilities Commission

TELEPHONE EXCHANGE CARRIERS OF ALASKA

ACCESS SERVICES

11. Access Service Interfaces and Transmission Specifications (Cont'd)

11.1 Switched Access Service (Cont'd)

11.1.1 Transport Interface Groups (Cont'd)

(F) Available Premises Interface Codes (Cont'd)

Interface Group	Telephone Company Switch Supervisory Signaling	Premises Interface Code	Feature Group A	B	C	D
2 (Cont'd)	GO	4GS2	X			
	GO	4GS3	X			
	GO	6GS2	X			
	LO, GO	4DX2	X			
	LO, GO	4DX3	X			
	LO, GO	6EA2-E	X			
	LO, GO	6EA2-M	X			
	LO, GO	8EB2-E	X			
	LO, GO	8EB2-M	X			
	LO, GO	6EX2-B	X			
	RV, EA, EB, EC	4SF2		X	X	X
	RV, EA, EB, EC	4SF3		X		
	RV, EA, EB, EC	4DX2		X	X	X
	RV, EA, EB, EC	4DX3		X		
	RV, EA, EB, EC	6DX2			X	
	RV, EA, EB, EC	6EA2-E		X	X	X
	RV, EA, EB, EC	6EA2-M		X	X	X
	RV, EA, EB, EC	8EB2-E		X	X	X
	RV, EA, EB, EC	8EB2-M		X	X	X
	EA, EB, EC	8EC2-M			X	X
	RV	4RV2-O		X	X	X
	RV	4RV2-T		X	X	X
	RV	4RV3-O		X	X	
	RV	4RV3-T		X	X	
3	LOG, GO	4AH5-B	X			
	RV, EA, EB, EC	4AH5-B		X	X	X
4	LO, GO	4AH6-C	X			
	RV, EA, EB, EC	4AH6-C		X	X	X
5	LO, GO	4AH6-D	X			
	RV, EA, EB, EC	4AH6-D		X	X	X

Pursuant to Orders No. 6 & 7 in Docket U-90-26

RECEIVED
NOV 21 1990
State of Alaska
Public Utilities Commission

ACCESS SERVICES

11. Access Service Interfaces and Transmission Specifications (Cont'd)

11.1 Switched Access Service (Cont'd)

11.1.1 Transport Interface Groups (Cont'd)

(F) Available Premises Interface Codes (Cont'd)

Interface Group	Telephone Company Switch Supervisory Signaling	Premises Interface Code	Feature Group A	B	C	D
6	LO, GO	4DS9-15	X			
	LO, GO	4DS9-15L	X			
	RV, EA, EB, EC	4DS9-15		X	X	X
	RV, EA, EB, EC	4DS9-15L		X	X	X
7	LO, GO	4DS9-31	X			
	LO, GO	4DS9-31L	X			
	RV, EA, EB, EC	4DS9-31		X	X	X
	RV, EA, EB, EC	4DS9-31L		X	X	X
8	LO, GO	4DS0-63	X			
	LO, GO	4DS0-63L	X			
	RV, EA, EB, EC	4DS0-63		X	X	X
	RV, EA, EB, EC	4DS0-63L		X	X	X
9	LO, GO	4DS6-44	X			
	LO, GO	4DS6-44L	X			
	RV, EA, EB, EC	4DS6-44		X	X	X
	RV, EA, EB, EC	4DS6-44L		X	X	X
10	LO, GO	4DS6-27	X			
	LO, GO	4DS6-27L	X			
	RV, EA, EB, EC	4DS6-27		X	X	X
	RV, EA, EB, EC	4DS6-27L		X	X	X

Pursuant to Orders No. 6 & 7 in Docket U-90-26

RECEIVED
NOV 21 1990
State of Alaska
Public Utilities Commission

ACCESS SERVICES

11. Access Service Interfaces and Transmission Specifications (Cont'd)

11.1 Switched Access Service (Cont'd)

11.1.2 Standard Transmission Specifications

Descriptions of the transmission specifications available with each Feature Group as a function of the Interface Group selected by the customer, are set forth in (A) through (D) following. Descriptions of each of these Standard Transmission Specifications and the two Data Standard Transmission Parameters mentioned are set forth respectively in (E) through (G) and 11.1.3(A) and (B) following.

(A) Feature Group A

FGA is provided with either Type B or Type C Transmission Specifications. The specifications for the associated parameters are guaranteed to the first point of switching. Type C Transmission Specifications are provided with Interface Group 1 and Type B is provided with Interface Groups 2 through 10. Type DB Data Transmission Parameters are provided with FGA to the first point of switching.

(B) Feature Group B

FGB is provided with either Type B or Type C Transmission Specifications. The specifications for the associated parameters are guaranteed to the end office when routed directly or to the first point of switching when routed via an access tandem. Type C Transmission Specifications are provided with Interface Groups 1 and Type B is provided with Interface Groups 2 through 10. Type DB Data Transmission Parameters are provided with FGB to the first point of switching.

RECEIVED
NOV 21 1990
State of Alaska
Public Utilities Commission

ACCESS SERVICES

11. Access Service Interfaces and Transmission Specifications (Cont'd)

11.1 Switched Access Service (Cont'd)

11.1.2 Standard Transmission Specifications (Cont'd)

(C) Feature Group C

FGC is provided with either Type B or Type C Transmission Specifications as follows:

- When routed directly to the end office either Type B or Type C is provided.

- When routed to an access tandem only Type B is provided.

- Type B or Type C is provided on the transmission path from the access tandem to the end office.

Type C Transmission Specifications are provided with Interface Group 1 when routed directly to an end office. Type B is provided with Interface Groups 2 through 10, whether routed directly to an end office or to an access tandem.

Type DB Data Transmission Parameters are provided with FGC for the transmission path between the customer designated premises and the end office when directly routed to to the end office, and between the customer designated premises and the access tandem and between the access tandem and the end office when routed via an access tandem.

Pursuant to Orders No. 6 & 7 in Docket U-90-26

RECEIVED
NOV 21 1990
State of Alaska
Public Utilities Commission

ACCESS SERVICES

11. Access Service Interfaces and Transmission Specifications (Cont'd)

11.1 Switched Access Service (Cont'd)

11.1.2 Standard Transmission Specifications (Cont'd)

(D) Feature Group D

FGD is provided with either Type A, Type B or Type C Transmission Specifications as follows:

- When routed to the end office either Type B or C is provided.

- When routed to an access tandem only Type A is provided.

- Type A is provided on the transmission path from the access tandem to the end office.

Type C Transmission Specifications are provided with Interface Group 1. Type A and Type B Transmission Specifictions are provided with Interface Groups 2 through 10.

Type DB Data Transmission Parameters are provided with FGD for the transmission path between the customer designated premises and the end office when directly routed to the end office. Type DA Data Transmission Parameters are provided for the transmission path between the customer designated premises and the access tandem and between the access tandem and the end office when routed via an access tandem.

(E) Type A Transmission Specifications

Type A Transmission Specifications is provided with the following parameters:

(1) Loss Deviation

The maximum Loss Deviation of the 1004 Hz loss relative to the Expected Measured Loss (EML) is ± 2.0 dB

Pursuant to Orders No. 6 & 7 in Docket U-90-26

RECEIVED
NOV 21 1990
State of Alaska
Public Utilities Commission

ACCESS SERVICES

11. Access Service Interfaces and Transmission Specifications (Cont'd)

11.1 Switched Accesss Service (Cont'd)

11.1.2 Standard Transmission Specifications (Cont'd)

(E) Type A Transmission Specifications (Cont'd)

(2) Attenuation Distortion

The maximum Attenuation Distortion in the 404 to 2804 Hz frequency band relative to the loss at 1004 Hz is -1.0 dB to +3.0 dB.

(3) C-Message Noise

The maximum C-Message Noise for the transmission path at the route miles listed is less than or equal to:

Route Miles	C-Message Noise
less than 50	32 dBrnCO
51 to 100	34 dBrnCO
101 to 200	37 dBrnCO
201 to 400	40 dBrnCO
401 to 1000	42 dBrnCO

(4) C-Notch Noise

The maximum C-Notch Noise, utilizing a -16 dBm0 holding tone, is less than or equal to 45 dBrnCO.

RECEIVED
NOV 21 1990
State of Alaska
Public Utilities Commission

ACCESS SERVICES

11. Access Service Interfaces and Transmission Specifications (Cont'd)

11.1 Switched Access Service (Cont'd)

11.1.2 Standard Transmission Specifications (Cont'd)

(E) Type A Transmission Specifications (Cont'd)

(5) Echo Control

Echo Control, identified as Equal Level Echo Path Loss, and expressed as Echo Return Loss and Singing Return Loss, is dependent on the routing, i.e., whether the service is routed directly from the customer's point of termination (POT) to the end office or via an access tandem. It is equal to or greater than the following:

	Echo Return Loss	Singing Return Loss
POT to Access Tandem	21 dB	14 dB
POT to End Office		
- Direct	N/A	N/A
- Via Access Tandem	16 dB	11 dB

(6) Standard Return Loss

Standard Return Loss expressed as Echo Return Loss and Singing Return Loss on two-wire ports of a four-wire point of termination shall be equal to or greater than:

Echo Return Loss	Singing Return Loss
5 dB	2.5 dB

Pursuant to Orders No. 6 & 7 in Docket U-90-26

RECEIVED
NOV 21 1990
State of Alaska
Public Utilities Commission

ACCESS SERVICES

11. Access Service Interfaces and Transmission Specifications (Cont'd)

11.1 Switched Access Service (Cont'd)

11.1.2 Standard Transmission Specifications (Cont'd)

(F) Type B Transmission Specifications

Type B Transmission Specifications are provided with the following parameters:

(1) Loss Deviation

The maximum Loss deviation of the 1004 Hz loss relative to the Expected Measured Loss (EML) is ± 2.5 dB.

(2) Attenuation Distortion

The maximum Attenuation Distortion in the 404 to 2804 Hz frequency band relative to loss at 1004 Hz is -2.0 dB to +4.0 dB.

(3) C-Message Noise

The maximum C-Message Noise for the transmission path at the route miles listed is less than or equal to:

	C-Message Noise*	
Route Miles	Type B1	Type B2
less than 50	32 dBrnCO	35 dBrnCO
51 to 100	33 dBrnCO	37 dBrnCO
101 to 200	35 dBrnCO	40 dBrnCO
201 to 400	37 dBrnCO	43 dBrnCO
401 to 1000	39 dBrnCO	45 dBrnCO

(4) C-Notch Noise

The maximum C-Notch Noise, utilizing a -16 dBmO holding tone is less than or equal to 47 dBrnCO.

* For Feature Groups C and D only Type B2 will be provided. For Feature Group A and B, Type B1 or B2 will be provided as set forth in Technical TR-NPL-000334

Pursuant to Orders No. 6 & 7 in Docket U-90-26

RECEIVED
NOV 21 1990
State of Alaska
Public Utilities Commission

ACCESS SERVICES

11. Access Service Interfaces and Transmission Specifications (Cont'd)

11.1 Switched Access Service (Cont'd)

11.1.2 Standard Transmission Specifications (Cont'd)

(F) Type B Transmission Specifications (Cont'd)

(5) Echo Control

Echo Control, identified as Impedance Balance for FGA and FGB and Equal Level Echo Path Loss for FGC and FGD, and expressed as Echo Return Loss (ERL) and Singing Return Loss (SRL), is dependent on the routing, i.e., whether the service is routed directly from the customer's point of termination (POT) to the end office or via an access tandem. The ERL and SRL also differ by Feature Group, type of termination, and type of transmission path. They are greater than or equal to the following:

	Echo Return Loss	Singing Return Loss
POT to Access Tandem		
- Terminated in 4-Wire trunk	21 dB	14 dB
- Terminated in 2-Wire trunk	16 dB	11 dB
POT to End Office		
- Direct	16 dB	11 dB
- Via Access Tandem		
. For FGB access	8 dB	4 dB
. For FGC access (Effective 4-Wire transmission path at end office)	16 dB	11 dB
. For FGC access (Effective 2-Wire transmission path at end office)	13 dB	6 dB

Pursuant to Orders No. 6 & 7 in Docket U-90-26

RECEIVED
NOV 21 1990
State of Alaska
Public Utilities Commission

ACCESS SERVICES

11. Access Service Interfaces and Transmission Specifications (Cont'd)

11.1 Switched Access Service (Cont'd)

11.1.2 Standard Transmission Specifications (Cont'd)

(F) Type B Transmission Specifications (Cont'd)

(6) Standard Return Loss

Standard Return Loss, expressed as Echo Return Loss and Singing Return Loss, on two-wire ports of a four-wire point of termination shall be equal to or greater than:

Echo Return Loss	Singing Return Loss
5 dB	2.5 dB

(G) Type C Transmission Specifications

Type C Transmission Specifications are provided with the following parameters:

(1) Loss Deviation

The maximum Loss Deviation of the 1004 Hz Loss relative to the Expected Measured Loss (EML) is ± 3.0 dB.

(2) Attenuation Distortion

The maximum Attenuation Distortion in the 404 to 2804 Hz frequency band relative to loss at 1004 Hz is -2.0 dB to +5.5 dB.

Pursuant to Orders No. 6 & 7 in Docket U-90-26

RECEIVED
NOV 21 1990
State of Alaska
Public Utilities Commission

ACCESS SERVICES

11. Access Service Interfaces and Transmission Specifications (Cont'd)

11.1 Switched Access Service (Cont'd)

11.1.2 Standard Transmission Specifications (Cont'd)

(G) Type C Transmission Specifications (Cont'd)

(3) C-Message Noise

The maximum C-Message Noise for the transmission patch at the route miles listed is less than or equal to:

Route Miles	C-Message Noise* Type C1	Type C2
less than 50	32 dBrnC0	38 dBrnC0
51 to 100	33 dBrnC0	39 dBrnC0
101 to 200	35 dBrnC0	41 dBrnC0
201 to 400	37 dBrnC0	43 dBrnC0
401 to 1000	39 dBrnC0	45 dBrnC0

(4) C-Notch Noise

The maximum C-Notch Noise, utilizing a -16 dBm0 holding tone is less than or equal to 47 dBrnC0.

* For Feature Groups C and D only Type C2 will be provided. For Feature Groups A and B, Type C1 and C2 will be provided as set forth in Technical Reference TR-NPL-000334.

Pursuant to Orders No. 6 & 7 in Docket U-90-26

RECEIVED
NOV 21 1990
State of Alaska
Public Utilities Commission

ACCESS SERVICES

11. Access Service Interfaces and Transmission Specifications (Cont'd)

11.1 Switched Access Service (Cont'd)

11.1.2 Standard Transmission Specifications (Cont'd)

(G) Type C Transmission Specifications (Cont'd)

(5) Echo Control

Echo Control, identifies as Return Loss and expressed as Echo Return Loss and Singing Return Loss is dependent on the routing, i.e., whether the service is routed directly from the customer's point of termination (POT) to the end office or via an access tandem. It is equal to or greater than the following:

	Echo Return Loss	Singing Return Loss
POT to Access Tandem	13 dB	6 dB
POT to End Office		
- Direct	13 dB	6 dB
- Via Access Tandem (for FGB only)	8 dB	4 dB

11.1.3 Data Transmission Parameters

Two types of data Transmission Parameters, i.e., Type DA and Type DB, are provided for the Feature Group arrangements. Type DB is provided with Feature Groups A, B and C and also with Feature Group D when Feature Group D is directly routed to the end office. Type DA is only provided with Feature Group D and only when routed via an access tandem. Following are descriptions of each.

(A) Data Transmission Parameters Type DA

(1) Signal to C-Notched Noise Ratio

The Signal to C-Notched Noise Ratio is equal to or greater than 33 dB.

Pursuant to Orders No. 6 & 7 in Docket U-90-26

RECEIVED
NOV 21 1990
State of Alaska
Public Utilities Commission

TELEPHONE EXCHANGE CARRIERS OF ALASKA

ACCESS SERVICES

11. Access Service Interfaces and Transmission Specifications (Cont'd)

11.1 Switched Access Service (Cont'd)

11.1.3 Data Transmission Parameters (Cont'd)

(A) Data Transmission Parameters Type DA (Cont'd)

(2) Envelope Delay Distortion

The maximum Envelope Delay Distortion for the frequency banks and route miles specified is:

604 to 2804 Hz

less than 50 route miles	500 microseconds
equal to or greater than 50 route miles	900 microseconds

1004 to 2404 Hz

less than 50 route miles	200 microseconds
equal to or greater than 50 route miles	400 microseconds

(3) Impulse Noise Counts

The Impulse Noise Counts exceeding a 65 dBrnC0 threshold in 15 minutes is no more than 15 counts.

(4) Intermodulation Distortion

The Second Order (R2) and Third Order (R3) Intermodulation Distortion products are equal to or greater than:

Second Order (R2)	33 dB
Third Order (R3)	37 dB

Pursuant to Orders No. 6 & 7 in Docket U-90-26

RECEIVED
NOV 21 1990
State of Alaska
Public Utilities Commission

ACCESS SERVICES

11. Access Service Interfaces and Transmission Specifications (Cont'd)

11.1 Switched Access Service (Cont'd)

11.1.3 Data Transmission Parameters (Cont'd)

(A) Data Transmission Parameters Type DA (Cont'd)

(5) Phase Jitter

The Phase Jitter over the 4-300 Hz frequency band is less than or equal to 5° peak-to-peak.

(6) Frequency Shift

The maximum Frequency Shift does not exceed -2 to +2 Hz.

(B) Data Transmission Parameters Type DB

(1) Signal to C-Notched Noise Ratio

The signal to C-Notched Noise Ratio is equal to or greater than 30 dB.

(2) Envelope Delay Distortion

The maximum Envelope Delay Distortion for the frequency bands and route miles specified is:

604 to 2804 Hz

less than 50 route miles	800 microseconds
equal to or greater than 50 route miles	1000 microseconds

1004 to 2404 Hz

less than 50 route miles	320 microseconds
equal to or greater than 50 route miles	500 microseconds

Pursuant to Orders No. 6 & 7 in Docket U-90-26

RECEIVED
NOV 21 1990
State of Alaska
Public Utilities Commission

ACCESS SERVICES

11. Access Service Interfaces and Transmission Specifications (Cont'd)

11.1 Switched Access Service (Cont'd)

11.1.3 Data Transmission Parameters (Cont'd)

(B) Data Transmission Parameters Type DB (Cont'd)

(3) Impulse Noise Counts

The Impulse Noise counts exceeding a 67 dBrnCO threshold in 15 minutes is no more than 15 counts.

(4) Intermodulation Distortion

The Second Order (R2) and Third Order (R3) Intermodulation Distortion products are equal to or greater than:

Second Order (R2)	31 dB
Third Order (R3)	34 dB

(5) Phase Jitter

The Phase Jitter over the 4-300 Hz frequency band is less than or equal to 7° peak-to-peak.

(6) Frequency Shift

The maximum Frequency Shift does not exceed -2 to +2 Hz.

Pursuant to Orders No. 6 & 7 in Docket U-90-26

RECEIVED
NOV 21 1990
State of Alaska
Public Utilities Commission

ACCESS SERVICES

11. Access Service Interfaces and Transmission Specifications (Cont'd)

11.2 Special Access Service

This section explains and lists the codes that the customer must specify when ordering Special Access Service. These codes provide a standardized means to relate the services being ordered to Special Access Service offerings contained in Section 7 preceding.

When ordering, the type of Special Access Service is described by two code sets, the Network Channel (NC) code and the Network Channel Interface (NCI) codes.

The Network Channel (NC) code consists of two elements. Element one is a Channel Service Code (character positions 1 and 2) that describes the channel service type in an abbreviated form. Element two is an Optional Feature Code (character positions 3 and 4) that identifies option codes available for each channel service code, such as C-conditioning or Improved Return Loss.

The Network Channel Interface (NCI) is used to identify interface specifications associated with a particular channel. This code describes the total wires, protocol, impedance, protocol options and transmission level point(s) reflecting physical and electrical characteristics between the Telephone Company and the customer.

On the following three (3) pages are examples which explain the specific characters of the codes and which reference matrices and charts used in developing the codes. Included in the matrices are Service Designator (SD) codes which are used to identify variations of service within service types. The SD and NC codes are displayed as components of the matrices designated as Technical Specifications packages in (A) through (E) following. Through the use of these matrices, SD codes may be converted to NC codes for service ordering purposes.

A chart is also provided in 11.3.2 following which contains information necessary to develop NCI codes.

RECEIVED
NOV 21 1990
State of Alaska
Public Utilities Commission

TELEPHONE EXCHANGE CARRIERS OF ALASKA

ACCESS SERVICES

11. Access Service Interfaces and Transmission Specifications (Cont'd)

11.2 Special Access Service (Cont'd)

Comprehensive lists of allowed Network Channel (NC) and Network Channel Interface (NCI) codes are contained in Special Report SR-ISD-000307. However, not all services contained in this Special Report may be offered by the Telephone Company at this time.

Lastly, 11.3.2.C following provides a list of compatible Network Channel Interfaces inasmuch as the Network Channel Interfaces associated with a given service need not always be the same, but all must be compatible.

Example No. 1:

If the customer wishes to order a 4-wire voice grade circuit with 600 Ohms impedance, capable of data transmission, and with improved return loss, the customer might specify the following:

NC	NCI	SECNCI
LG-R	04DB2	04DA2-S

NC Code:

LG =	Voice Grade Channel Service, VG6
-R =	Improved Return Loss

NCI Code:

04 =	Number of physical wires at CDP
DB =	Data stream in VF frequency band at the customer designated main terminal location
2 =	600 Ohms impedance

SECNCI (Secondary NCI Code):

04 =	Number of physical wires at CDP
DA =	Data stream in VG frequency at the customer designated secondary terminal location
2 =	600 Ohms impedance
S =	Sealing current option for 4-wire transmission

In the above example the NCI (Network Channel Interface) code is the interface requested at the customer's POT (Point of Termination) and the SECNCI (Secondary Network Channel Interface) code represents the interface at the end office serving the End User.

Pursuant to Orders No. 6 & 7 in Docekt U-90-26

RECEIVED
NOV 21 1990
State of Alaska
Public Utilities Commission

11. Access Service Interfaces and Transmission Specifications (Cont'd)

11.2 Special Access Service (Cont'd)

Example No. 2:

If the customer wishes to order a FX circuit to a station, with 600 Ohms impedance, loop start signaling, which is 4-wire at the CDP and 2-wire at the end-user, the customer might specify:

NC	NCI	SECNCI
LC--	04LO2	02LS2

NC Code:
LC = Voice Grade Channel Service, VG2
-- = No Optional Features

NCI Code:
04 = Number of physical wires at CDP
LO = Loop start, loop signaling - open end
2 = 600 Ohms impedance

SECNCI (Secondary NCI Code):
02 = Number of physical wires at CDP
LS = Loop start signaling - closed end
2 = 600 Ohms impedance

RECEIVED
NOV 21 1990
State of Alaska
Public Utilities Commission

ACCESS SERVICES

11. Access Service Interfaces and Transmission Specifications (Cont'd)

11.2 Special Access Service (Cont'd)

Example No. 3:

If the customer wishes to order a 1.544 Mbps Hi-cap facility with no channel options such as CO multiplexing, the customer might specify the following:

NC	NCI	SECNCI
HC--	04DS9-15	04DS9-15

NC Code:

HC = High Capacity Channel Service, HC1
-- = No Optional Features

NCI, SECNCI Code:

04 = Number of physical wires at CDP
DS = Digital hierarchy interface
9 = 100 Ohms impedance
15 = 1.544 Mbps (DS1) format

The preceding three examples use information contained in Special Report SR-ISD-000307.

RECEIVED
NOV 21 1990
State of Alaska
Public Utilities Commission

11. Access Service Interfaces and Transmission Specifications (Cont'd)

11.2 Special Access Service (Cont'd)

11.2.1 Network Channel (NC) Codes

In order to determine the NC code appropriate for the service to be ordered, the type of Special Access Service the customer wishes must be identified. This identification is accomplished by a Service Designator (SD) code. The broad categories of Service Designator codes (e.g., VG, etc.) are set forth in Section 7 preceding. Variations within service type (e.g., VG1, etc.) are described in the various Technical Publications cited in (A) through (E) following. Having determined the specific service type to be ordered and its SD code, and having used the appropriate Technical Publication, the customer should match the SD code to the NC code using the following matrices. Once the NC code has been determined the Network Channel Interface (NCI) code may be developed using the information set forth in 11.2.1 following and the guidelines concerning specific parameters available for each service type as set forth in the specified Technical Publication.

RECEIVED
NOV 21 1990
State of Alaska
Public Utilities Commission

TELEPHONE EXCHANGE CARRIERS OF ALASKA

ACCESS SERVICES

11. Access Service Interfaces and Transmission Specifications (Cont'd)

11.2 Special Access Service (Cont'd)

11.2.1 Network Channel (NC) Codes

(A) Technical Specifications Packages Voice Grade Service

	Package VG-													
SD Code	C*	1	2	3	4	5	6	7	8	9	10	11	12	W
NC Code	LQ	LB	LC	LD	LE	LF	LG	LH	LJ	LK	LN	LP	LR	SE
Parameter														
Attenuation Distortion	X	X	X	X	X	X	X	X	X	X	X	X	X	X
C-Message Noise	X	X	X	X	X	X	X	X	X	X	X	X	X	X
Echo Control	X	X	X	X		X		X	X			X	X	X
Envelope Delay Distortion	X						X	X	X	X	X	X	X	X
Frequency Shift	X						X	X	X	X	X	X	X	X
Impulse Noise	X					X	X	X	X	X	X	X	X	X
Intermodulation Distortion	X						X	X	X	X	X	X		X
Loss Deviation	X	X	X	X	X	X	X	X	X	X	X	X	X	X
Phase Hits, Gain Hits, and Dropouts	X													
Phase Jitter	X						X	X	X	X	X	X		X
Signal-to-C Message Noise					X									
Signal-to-C Notch Noise	X					X	X	X	X	X	X	X	X	X

The technical specifications for these parameters (except for dropouts, phase hits, and gain hits) are described in Technical References TR-NPL-000334 and TR-NPL-000335. The technical specifications for dropouts, phase hits, and gain hits are described in Technical Reference PUB41004, Table 4.

* The desired parameters are selected by the customer from the list of available parameters.

Pursuant to Orders No. 6 & 7 in Docket U-90-26

RECEIVED
NOV 21 1990
State of Alaska
Public Utilities Commission

TELEPHONE EXCHANGE CARRIERS OF ALASKA

ACCESS SERVICES

11. Access Service Interfaces and Transmission Specifications (Cont'd)

11.2 Special Access Service (Cont'd)

11.2.1 Network Channel (NC) Codes (Cont'd)

	Package VG-													
SD Code	C*	1	2	3	4	5	6	7	8	9	10	11	12	W
NC Code	LQ	LB	LC	LD	LE	LF	LG	LH	LJ	LK	LN	LP	LR	SE
Optional Features and Functions														
Central Office Bridging Capability	X		X			X	X				X	X	X	
Conditioning:														
. C-Type	X					X	X	X	X	X	X			
. Improved Attenuation Distortion	X					X	X	X	X	X	X			
. Improved Envelope Delay Distortion	X					X	X	X	X	X	X			
. Data Capability	X						X	X			X			
Improved Two-Wire Voice Transmission														X
Signaling Capability	X	X	X	X				X	X	X				
Central Office Multiplexing	X						X							
Sealing Current	X						X							
Telephoto Capability	X											X		
Customer Specified Premises Receive Level	X		X	X				X	X	X				
Improved Return Loss for Effective Four-Wire Transmission	X	X	X	X	X	X	X	X	X	X	X	X	X	
For Effective Two-Wire Transmission	X		X	X				X						
PPSN Interface Arrangement	X									X				
Selective Signaling Arrangement	X		X			X	X				X			
Transfer Arrangement	X	X	X	X	X	X	X	X	X	X	X	X	X	

Pursuant to Orders No. 6 & 7 in Docket U-90-26

RECEIVED
APR 30 1997
ALASKA PUBLIC UTILITIES COMM.

ACCESS SERVICES

11. Access Service Interfaces and Transmission Specifications (Cont'd)

11.2 Special Access Service (Cont'd)

11.2.1 Network Channel (NC) Codes (Cont'd)

(B) Technical Specifications Packages Digital Data Service

	Package					
SD Code	D1	D2	D3	D4	D5	D6
NC Code	XA	XB	XG	XH	XE	YN
Parameter/Hubbed						
Error-Free Seconds	X	X	X	X	X	X
Optional Features and Functions/Hubbed						
Central Office Bridging Capability	X	X	X	X	X	X
Transfer Arrangement	X	X	X	X	X	X
PPSN Interface Transfer Arrangement	X	X	X	X	X	X

The Telephone Company will provide a channel capable of meeting a monthly average performance equal to or greater than 99.875% error-free seconds (if provided through a Digital Data hub) while the channel is in service, if it is measured through a CSU equivalent which is designed, manufactured, and maintained to conform with the specifications contained in Technical Reference PUB 62310.

Optional Features and Functions/Non-Hubbed			
Public Packet Data Arrangement	X	X	(N)

Voltages which are compatible with Digital Data Service are delineated in Technical Reference PUB TR-NWT-000341.11

RECEIVED

JUN 1 1 2009

STATE OF ALASKA
REGULATORY COMMISSION OF ALASKA

ACCESS SERVICES

11. Access Service Interfaces and Transmission Specifications (Cont'd)

11.2 Special Access Service (Cont'd)

11.2.1 Network Channel (NC) Codes (Cont'd)

C. Technical Specifications Packages High Capacity Service

	Package					
SD Code	HBO	HC1	HC1C	HC2	HC3	HC4
NC Code	HS	HC	HD	HE	HF	HG
Parameters						
Error-Free Seconds		X				
Optional Features and Functions						
Automatic Loop Transfer		X				
Central Office Multiplexing:						
DS4 to DS1						X
DS3 to DS1					X	
DS2 to DS1				X		
DS1C to DS1			X			
DS1 to Voice		X				
DS1 to DSO		X				
DSO to Subrate*	X					
Transfer Arrangement		X				

A channel with technical specifications package HC1 will be capable of an error-free second performance of 98.75% over a continuous 24 hour period as measured at the 1.544 Mbps rate through a CSU equivalent which is designed, manufactured, and maintained to conform with the specifications contained in Technical Reference GR-342-CORE. (C)

* Available only on a channel of 1.544 Mbps facility to a Telephone Company hub.

RECEIVED
JUN 11 2009
STATE OF ALASKA
REGULATORY COMMISSION OF ALASKA

ACCESS SERVICES

11. Access Service Interfaces and Transmission Specifications (Cont'd)

11.2 Special Access Service (Cont'd)

11.2.1 Network Channel (NC) Codes (Cont'd)

C.1 Technical Specifications Packages Synchronous Optical Channel Service

		Package	
	SD Code	OC3	OC12
	NC Code	OB	OD
Parameters			
Error-Free Seconds		X	X
Optional Features and Functions			
Customer Premises Multiplexing:			
OC12 to OC3			X
OC12 to OC3c			X
OC12 to DS3			X
OC12 to DS1			X
OC3 to STS-1		X	
OC3 to DS3		X	
OC3 to DS1		X	
Central Office Multiplexing:			
OC12 to OC3			X
OC12 to OC3c			X
OC3 to DS3		X	
OC3 to DS1		X	

Technical specifications are delineated in Technical Reference GR-253-CORE, GR-1374-CORE, ANSI T1.102-1993 and ANSI T1.105-2001.

RECEIVED
SEP 23 1991
State of Alaska
Public Utilities Commission

TELEPHONE EXCHANGE CARRIERS OF ALASKA

ACCESS SERVICES

11. Access Service Interfaces and Transmission Specifications (Cont'd)

11.2 Special Access Service (Cont'd)

11.2.1 Network Channel (NC) Codes (Cont'd)

(D) Technical Specifications Packages Program
Audio Service

	Package				
SD Code	APC*	AP1	AP2	AP3	AP4
NC Code	PQ	PE	PF	PJ	PK
Parameter					
Actual Measured Loss	X	X	X	X	X
Amplitude Tracking	X				
Crosstalk	X	X	X	X	X
Distortion Tracking	X				
Gain/Frequency Distortion	X	X	X	X	X
Group Delay	X				
Noise	X	X	X	X	X
Phrase Tracking	X				
Short-Term Gain Stability	X				
Short-Term Loss	X				
Total Distortion	X	X	X	X	X
Optional Features and Functions					
Central Office Bridging Capability	X	X	X	X	X
Gain Conditioning	X	X	X	X	X
Stereo	X				X

The technical specifications are described in Technical Reference TR-NPL-000337 and associated Addendum. (C)

* The desired parameters are selected by the customer from the list of available parameters.

Pursuant to Letter Order Dated July 15, 1991.

Tariff Advise No. 3 Effective: July 15, 1991

Issued: September 24, 1991
Issued by: Alaska Exchange Carriers Association, Inc.
By: [signature] Title: President

RECEIVED
NOV 21 1990
State of Alaska
Public Utilities Commission

TELEPHONE EXCHANGE CARRIERS OF ALASKA

ACCESS SERVICES

11. Access Service Interfaces and Transmission Specifications (Cont'd)

11.2 Special Access Service (Cont'd)

11.2.1 Network Channel (NC) Codes (Cont'd)

(E) Technical Specifications Packages Video Service

	Package		
SD Code	TVC*	TV1	TV2
NC Code	TQ	TV	TW
Video Parameters			
Insertion Gain	X	X	X
Field-Time Distortion	X	X	X
Line-Time Distortion	X	X	X
Short-Time Distortion	X	X	X
Chrominance-Luminance Gain Inequality	X	X	X
Chrominance-Luminance Delay Inequality	X	X	X
Amplitude/Frequency Characteristic	X	X	X
Luminance Non-Linear Distortion	X	X	X
Chrominance Non-Linear Gain Distortion	X	X	X
Chrominance Non-Linear Phase Distortion	X	X	X
Transient Synchronizing Signal Non-Linearty	X	X	X
Dynamic Gain Distortion			
- Picture Signal	X	X	X
- Synchronizing S ignal	X	X	X
Differential Gain	X	X	X
Differential Phase	X	X	X
Chrominance-Luminance Intermodulation	X	X	X

* The desired parameters are selected by the customer from the list of available parameters.

Pursuant to Orders No. 6 & 7 in Docket U-90-26

RECEIVED
NOV 21 1990
State of Alaska
Public Utilities Commission

TELEPHONE EXCHANGE CARRIERS OF ALASKA

ACCESS SERVICES

11. Access Service Interfaces and Transmission Specifications (Cont'd)

11.2 Special Access Service (Cont'd)

11.2.1 Network Channel (NC) Codes (Cont'd)

(E) Technical Specifications Packages Video Service (Continued)

	Package		
SD Code	TVC*	TV1	TV2
NC Code	TQ	TV	TW
Audio Channel Parameters Associated with Video Service			
Insertion Gain	X	X	X
Amplitude/Frequency Characteristic	X	X	X
Total Harmonic Distortion and Noise	X	X	X
Maximum Steady-State Test Levels	X	X	X
Gain Differential Between Channels	X	X	
Phase Differential Between Channels	X	X	
Crosstalk	X	X	X
Audio-To-Video Time Differential	X	X	X

The technical specifications are described in Technical Reference TR-NPL-000338.

* The desired parameters are selected by the customer from the list of available parameters.

Pursuant to Orders No. 6 & 7 in Docket U-90-26

RECEIVED
NOV 21 1990
State of Alaska
Public Utilities Commission

ACCESS SERVICES

11. Access Service Interfaces and Transmission Specifications (Cont'd)

11.2 Special Access Service (Cont'd)

11.2.2 Network Channel Interface (NCI) Codes

The electrical interface with the Telephone Company for Special Access Services, is defined by an interface code. There are interface codes for both the customer designated premises and the point of termination.

(A) Parameter Codes and Options

Parameter Code	Option	Definition
AB -		accepts 20 Hz ringing signal at customer's point of termination
AC -		accepts 20 Hz ringing signal at customer's end user's point of termination
AH -		analog high capacity interface
	- B	60 kHz to 108 kHz (12 channels)
	- C	312 kHz to 552 kHz (60 channels)
	- D	564 kHz to 3084 kHz (600 channels)
CT -		Centrex Tie Trunk Termination
DA -		data stream in VF frequency band at customer's end user's point of termination
DB -		data stream in VF frequency band at customer's point of termination
DC -		direct current or voltage
	- 1	monitoring interface with series RC combination (McCulloh format)
	- 2	Telephone Company energized alarm channel

RECEIVED
JUN 19 1996
State of Alaska
Public Utilities Commission

TELEPHONE EXCHANGE CARRIERS OF ALASKA

ACCESS SERVICES

11. Access Service Interfaces and Transmission Specifications (Cont'd)
11.2 Special Access Service (Cont'd)
11.2.2 Network Channel Interface (NCI) Codes (Cont'd)
(A) Parameter Codes and Options (Cont'd)

Parameter Code	Option	Definition	
DS -		digital hierarchy interface	
	- 15	1.544 Mbps (DS1) format per Bellcore GR-54 plus D4	(C)
	- 15E	8-bit PCM encoded in one 64 Kbps of the DS1 signal	
	- 15F	8-bit PCM encoded in two 64 Kbps of the DS1 signal	
	- 15G	8-bit PCM encoded in three 64 Kbps of the DS1 signal	
	- 15H	14/11-bit PCM encoded in six 64 Kbps of the DS1 signal	
	- 15J	1.544 Mbps format per Bellcore GR-54	(C)
	- 15K	1.544 Mbps format per Bellcore GR-54 plus extended framing format	(C)
	- 15L	1.544 Mbps (DS1) with SF signaling	
	- 27	274.176 Mbps (DS4)	
	- 27L	274.176 Mbps (DS4) with SF signaling	
	- 31	3.152 Mbps (DS1C)	
	- 31L	3.152 Mbps (DS1C) with SF signaling	
	- 44	44.736 Mbps (DS3)	
	- 44L	44.736 Mbps (DS3) with SF signaling	
	- 63	6.312 Mbps (DS2)	
	- 63L	6.312 Mbps (DS2) with SF signaling	
DU -		digital access interface	
	- 24	2.4 Kbps	
	- 48	4.8 Kbps	
	- 19	19.2 Kbps	(C)
	- 56	56.0 Kbps	
	- 96	9.6 Kbps	
	- 64	64.0 Kbps	(C)
	- A	1.544 Mbps format per Bellcore GR-54	(C)
	- B	1.544 Mbps format per Bellcore GR-54 plus D4	(C)
	- C	1.544 Mbps format per Bellcore GR-54 plus extended framing format	(C)
DX -		duplex signaling interface at customer's point of termination	
DY -		duplex signaling interface at customer's end user's point of termination	(D)

RECEIVED
NOV 21 1990
State of Alaska
Public Utilities Commission

TELEPHONE EXCHANGE CARRIERS OF ALASKA

ACCESS SERVICES

11. Access Service Interfaces and Transmission Specifications (Cont'd)

11.2 Special Access Service (Cont'd)

11.2.2 Network Channel Interface (NCI) Codes (Cont'd)

(A) Parameter Codes and Options (Cont'd)

Parameter

Code	Option	Definition
EA -	E	Type I E&M Lead Signaling. Customer at POT or customer's end user at POT originates on E Lead.
EA -	M	Type I E&M Lead Signaling. Customer at POT or customer's end user at POT originates on M Lead.
EB -	E	Type II E&M Lead Signaling. Customer at POT or customer's end user at POT originates on E Lead.
EB -	M	Type II E&M Lead Signaling. Customer at POT or customer's end user at POT originates on M Lead.
EC -		Type III E&M signaling at customer POT
EX -	A	tandem channel unit signaling for loop start or ground start and customer supplies open end (dial tone, etc.) functions.
EX -	B	tandem channel unit signaling for loop start or ground start and customer supplies closed end (dial pulsing, etc.) functions.
GO -		ground start loop signaling - open end function by customer or customer's end user
GS -		ground start loop signaling - closed end function by customer or customer's end user
IA -		E.I.A. (25 pin RS-232)
LA -		end user loop start loop signaling-Type A OPS registered port open end
LB -		end user loop start loop signaling-Type B OPS registered port open end
LC -		end user loop start loop signaling-Type C OPS registered port open end

Pursuant to Orders No. 6 & 7 in Docket U-90-26

RECEIVED

JUN 1 1 2009

STATE OF ALASKA
REGULATORY COMMISSION OF ALASKA

11. Access Service Interfaces and Transmission Specifications (Cont'd)

11.2 Special Access Service (Cont'd)

11.2.2 Network Channel Interface (NCI) Codes (Cont'd)

A. Parameter Codes and Options (Cont'd)

LO	loop start loop signaling - open end function by customer or customer's end user
LR	20 Hz automatic ringdown interface at customer with Telephone Company provided PLAR
LS	loop start loop signaling - closed end function by customer or customer's end user
NO	no signaling interface, transmission only

Parameter

Code	Option	Definition
PG		program transmission - no dc signaling
	1	nominal frequency from 50 to 15000 Hz
	3	nominal frequency from 200 to 3500 Hz
	5	nominal frequency from 100 to 5000 Hz
	8	nominal frequency from 50 to 8000 Hz
PR		protective relaying*
RV	0	reverse battery signaling, one way operation, originate by customer
	T	reverse battery signaling, one way operation, terminate function by customer or customer's end user
SF		single frequency signaling with VF band at either customer POT or customer's end user POT
	2	20.0 milliamperes
	3	3.0 milliamperes
	6	62.5 milliamperes
SO		SONET Optical (L)(N)
	AB	Long Range Multilongitudal Mode (LR1-MLM) Bidirectional Ring
	AU	LR1-MLM Unidirectional Ring
	BB	Long Range Single Longitudinal Mode (LR1-SLM) Bidirectional Ring

(N)

(L) Text relocated to Original Sheet No. 260.1

RECEIVED
JUN 1 1 2009
STATE OF ALASKA
REGULATORY COMMISSION OF ALASKA

ACCESS SERVICES

11. Access Service Interfaces and Transmission Specifications (Cont'd)

11.2 Special Access Service (Cont'd)

11.2.2 Network Channel Interface (NCI) Codes (Cont'd)

A. Parameter Codes and Options (Cont'd) (N)

Parameter

Code	Option	Definition
SO		SONET Optical (Cont'd)
	BU	LR1-MLM
	CB	Intermediate Range Multilongitudinal Mode (IR1-MLM) Bidirectional Ring
	CU	IR1-MLM Unidirectional Ring
	DB	Intermediate Range Singe Longitudinal Mode (IR1-SLM) Bidirectional Ring
	DU	IR1-SLM Unidirectional Ring
	EB	Short Range Multilongitudinal Mode Light Emitting Diode (SR-MLM/LED) Bidirectional Ring
	EU	SR-MLM/LED Unidirectional Ring
	FB	Short Range Multilongitudinal Mode (SR-MLM) Bidirectional Ring
	FU	SR-MLM Unidirectional Ring
ST		Synchronous Transmission Signal (STS)
	A	STS1
TV		television interface (L)
	1	combined (diplexed) video and one audio signal
	2	combined (diplexed) video and one audio signals

(L) Text relocated from Sheet No 260

RECEIVED
NOV 21 1990
State of Alaska
Public Utilities Commission

ACCESS SERVICES

11. Access Service Interfaces and Transmission Specifications (Cont'd)

11.2 Special Access Service (Cont'd)

11.2.2 Network Channel Interface (NCI) Codes (Cont'd)

(A) Parameter Codes and Options (Continued)

- 5 video plus one (or two) audio 5 kHz signal(s) or one (or two) two wire
- 15 video plus one (or two) audio 15 kHz signal(s)

* Available only for the transmission of audio tone protective relaying signals used in the protection of electric power systems during fault conditions.

(B) Impedance

The nominal reference impedance with which the channel will be terminated for the purpose of evaluating transmission performance:

Value (ohms)	Code(s)
110	0
150	1
600	2
900	3*
135	5
75	6
124	7
Variable	8
100	9

* For those interface codes with a 4-wire transmission path at the customer designated POT, rather than a standard 900 ohm impedance the code (3) denotes a customer provided transmission equipment termination. Such terminations were provided to customers in accordance with the FCC Docket No. 20099 Settlement Agreement.

Pursuant to Orders No. 6 & 7 in Docket U-90-26

RECEIVED
NOV 21 1990
State of Alaska
Public Utilities Commission

TELEPHONE EXCHANGE CARRIERS OF ALASKA

ACCESS SERVICES

11. Access Service Interfaces and Transmission Specifications (Cont'd)

11.2 Special Access Service (Cont'd)

11.2.2 Network Channel Interface (NCI) Codes (Cont'd)

(C) Compatible Network Channel Interfaces

(1) Voice Grade

Compatible CIs		Compatible CIs		Compatible CIs	
2AB2	2AC2	2DB2	2DA2	2LR2	2LR2
2AB3	2AC2	2DB3	2DA2	2LR3	2LR2
2CT3	2DY2	2DX3	2LA2	2LS	2GS
	4DS8		2LB2		2LS
	4DX2		2LC2		4GS
	4DX3		2LO3		4LS
	4DY2		2LS2		
	4EA2-E		2LS3	2LS2	2LA2
	4EA2-M				2LB2
	4SF2	2GO2	2GS2		2LC2
	4SF3		2GS3		
	6DX2			2LS3	2LA2
	6DY2	2GO3	2GS2		2LB2
	6DY3		2GS3		2LC2
	6EA2-E				
	6EA2-M	2GS	2GS	2NO2	2DA2
	6EB2-E		2LS		2NO2
	6EB2-M		4GS		
	6EB3-E		4LS	2NO3	2NO2
	8EB2-E				2PR2
	8EB2-M	2LO2	2LS2		
	8EC2		2LS3	2TF3	2TF2
	9DY2				
	9DY3	2LO3	2LS2		
	9EA2		2LS3		
	9EA3				

Pursuant to Orders No. 6 & 7 in Docket U-90-26

RECEIVED
NOV 21 1990
State of Alaska
Public Utilities Commission

ACCESS SERVICES

11. Access Service Interfaces and Transmission Specifications (Cont'd)

11.2 Special Access Service (Cont'd)

11.2.2 Network Channel Interface (NCI) Codes (Cont'd)

(C) Compatible Network Channel Interfaces (Cont'd)

(1) Voice Grade (Cont'd)

Compatible CIs		Compatible CIs		Compatible CIs	
4AB2	2AC2				
	4AB2				
	4AC2				
	4SF2				
4AB3	2AC2				
	4AC2				
	4SF2				
4AC2	2AC2				
	4AC2				
		4DS8-	2AC2	4DS8-	4DG2
			2DA2		4LR2
			2DY2		4LS2
			2GO2		4NO2
4DA2	4DA2		2GO3		4PR2
			2GS2		4RV2-T
4DB2	2DA2		2GS3		4SF2
	2NO2		2LA2		4SF3
	2PR2		2LB2		4TF2
	4DA2		2LC2		6DA2
	4DB2		2LO2		6DY2
	4NO2		2LO3		6DY3
	4PR2		2LR2		6EA2-E
	6DA2		2LS2		6EA2-M
			2LS3		6EB2-E
4DD3	2DE2		2NO2		6EB2-M
	4DE2		2PR2		6GS2
			2RV2-T		6LS2
			2TF2		8EB2-E
			4AC2		8EB2-M
			4DA2		9DY2
			4DE2		9DY3
			4DX2		9EA2
			4DX3		9EA3
			4DY2		
			4EA2-E		
			4EA2-M		

Pursuant to Orders No. 6 & 7 in Docket U-90-26

RECEIVED
NOV 21 1990
State of Alaska
Public Utilities Commission

TELEPHONE EXCHANGE CARRIERS OF ALASKA

ACCESS SERVICES

11. Access Service Interfaces and Transmission Specifications (Cont'd)

11.2 Special Access Service (Cont'd)

11.2.2 Network Channel Interface (NCI) Codes (Cont'd)

(C) Compatible Network Channel Interfaces (Cont'd)

(1) Voice Grade (Cont'd)

Compatible CIs		Compatible CIs		Compatible CIs	
4DX2	2DY2	4DX2	8EB2-E	4DX3	6DY2
	2LA2		8EB2-M		6DY3
	2LB2		9DY2		6EA2-E
	2LC2		9DY3		6EA2-M
	2LO3		9EA2		6EB2-E
	2LS2		9EA3		6EB2-M
	2LS3				6LS2
	2RV2-T	4DX3	2DY2		8EB2-E
	4DX2		2LA2		8EB2-M
	4DY2		2LB2		9DY2
	4EA2-E		2LC2		9DY3
	4EA2-M		2LO3		9EA2
	4LS2		2LS2		9EA3
	4RV2-T		2LS3		
	4SF2		2RV2-T	4DY2	2DY2
	4SF3		4DX2		4DY2
	6DY2		4DX3		
	6DY3		4DY2		
	6EA2-E		4EA2-E		
	6EA2-M		4EA2-M		
	6EB2-E		4LS2		
	6EB2-M		4RV2-T		
	6LS2		4SF2		
			4SF3		

Pursuant to Orders No. 6 & 7 in Docket U-90-26

RECEIVED
NOV 21 1990
State of Alaska
Public Utilities Commission

TELEPHONE EXCHANGE CARRIERS OF ALASKA

ACCESS SERVICES

11. Access Service Interfaces and Transmission Specifications (Cont'd)

11.2 Special Access Service (Cont'd)

11.2.2 Network Channel Interface (NCI) Codes (Cont'd)

(C) Compatible Network Channel Interfaces (Cont'd)

(1) Voice Grade (Cont'd)

Compatible CIs		Compatible CIs		Compatible CIs	
4EA2-E	2DY2	4EA3-E	2DY2	4GO2	2GO2
	4DY2		4DY2		2GO3
	4EA2-E		4EA2-E		2GS2
	4EA2-M		4EA2-M		2GS3
	4SF2		4SF2		4GS2
	6DY2		6DY2		4SF2
	6DY3		6DY3		6GS2
	6EB2-E		6EA2-E		
	6EB2-M		6EA2-M	4GO3	2GO2
	8EB2-E		6EB2-E		2GS2
	8EB2-M		6EB2-M		2GS3
	9DY2		8EB2-E		4GS2
	9DY3		8EB2-M		4SF2
			9DY2		6GS2
4EA2-M	2DY2		9DY3		
	4DY2		9EA2		
	4EA2-M		9EA3	4GS	2GS
	4SF2				2LS
	6DY2				4GS
	6DY3				4LS
	6EB2-E				
	6EB2-M				
	8EB2-E				
	8EB2-M				
	9DY2				
	9DY3				

Pursuant to Orders No. 6 & 7 in Docket U-90-26

Tariff Advice No. 1
Issued 11/15/90 Effective January 1, 1991
Issued By: Alaska Exchange Carriers Association, Inc.
By: [signature] Title President
AECA 11-44

RECEIVED
NOV 21 1990
State of Alaska
Public Utilities Commission

ACCESS SERVICES

11. Access Service Interfaces and Transmission Specifications (Cont'd)

11.2 Special Access Service (Cont'd)

11.2.2 Network Channel Interface (NCI) Codes (Cont'd)

(C) Compatible Network Channel Interfaces (Cont'd)

(1) Voice Grade (Cont'd)

Compatible CIs		Compatible CIs		Compatible CIs	
4LO2	2LS2	4LS3	2LA2	4SF2	2LO3
	2LS3		2LB2		2LR2
	4LS2		2LC2		2LS2
	4SF2		2LO2		2LS3
	6LS2		2LO3		2RV2-T
			4SF2		4AC2
4LO3	2LS2				4DY2
	2LS3	4NO2	2DA2		4LS2
	4LS2		2DE2		4RV2-T
	4SF2		2NO2		4SF2
	6LS2		4DA2		6DY2
			4DE2		6DY3
4LR2	2LR2		4NO2		6GS2
	4LR2		6DA2		9DY2
	4SF2				9DY3
		4RV2-0	2RV2-T		
4LR3	2LR2		4RV2-T	4SF3	2DY2
	4LR2		4SF2		2GO3
	4SF2				2GS2
					2GS3
4LS	2GS	4SF2	2AC2		2LA2
	2LS		2DY2		2LB2
	4GS		2GS2		2LC2
	4LS		2GS3		2LO3
			2LA2		2LR2
4LS2	2LA2		2LB2		
	2LB2		2LC2		
	2LC2				
	2LO2				
	2LO3				

Pursuant to Orders No. 6 & 7 in Docket U-90-26

RECEIVED
NOV 21 1990
State of Alaska
Public Utilities Commission

TELEPHONE EXCHANGE CARRIERS OF ALASKA

ACCESS SERVICES

11. Access Service Interfaces and Transmission Specifications (Cont'd)

11.2 Special Access Service (Cont'd)

11.2.2 Network Channel Interface (NCI) Codes (Cont'd)

(C) Compatible Network Channel Interfaces (Cont'd)

(1) Voice Grade (Cont'd)

Compatible CIs		Compatible CIs		Compatible CIs	
4SF3	2LS2	6DA	4DA2	6DY3	2DY2
	2LS3		6DA2		4DY2
	2RV2-T				6DY2
	4DY2	6DX2	2DY2		6DY3
	4EA2-E		4DY2		
	4EA2-M		4EA2-E	6EA2-E	2AC2
	4GS2				
	4LR2		4EA2-M		2DY2
	4LS2		4SF2		2LA2
	4RV2-T		6DY2		2LB2
	4SF2		6DY3		2LC2
	4SF3		6EA2-E		2LO3
	6DY2		6EA2-M		2LS2
	6DY3		6EB2-E		2LS3
	6EB2-E		6EB2-M		2RV2-T
	6EB2-M		8EB2-E		4AC2
	6GS2		8EB2-M		4DY2
	6LS2		9DY2		4EA2-E
	9DY2		9DY3		4EA2-M
	9DY3		9EA2		4LS2
	9EA2		9EA3		4RV2-T
	9EA3				4SF2
		6DY2	2DY2		4SF3
4TF2	2TF2		4DY2		6DY2
	4TF2		6DY2		6DY3
					6EA2-E
					6EA2-M

Pursuant to Orders No. 6 & 7 in Docket U-90-26

Tariff Advice No. 1
Issued 11/15/90 Effective January 1, 1991
Issued By: Alaska Exchange Carriers Association, Inc.
By: [signature] Title President
AECA 11-46

RECEIVED
NOV 21 1990
State of Alaska
Public Utilities Commission

ACCESS SERVICES

11. Access Service Interfaces and Transmission Specifications (Cont'd)

11.2 Special Access Service (Cont'd)

11.2.2 Network Channel Interface (NCI) Codes (Cont'd)

(C) Compatible Network Channel Interfaces (Cont'd)

(1) Voice Grade (Cont'd)

Compatible CIs		Compatible CIs		Compatible CIs	
6EA2-E	6EB2-E	6EA2-M	6DY2	6EB-3E	2DY2
	6EB2-M		6DY3		4DY2
	6LS2		6EA2-M		4EA2-E
	8EB2-E		6EB2-E		4EA2-M
	8EB2-M		6EB2-M		4SF2
	9DY2		6LS2		6DY2
	9DY3		8EB2-E		6DY3
			8EB2-M		6EA2-E
6EA2-M	2AC2		9DY2		6EA2-M
	2DY2		9DY3		8EB2-E
	2LA2				8EB2-M
	2LB2	6EB2-E	2DY2		9DY2
	2LC2		4DY2		9DY3
	2LO3		4SF2		9EA2
	2LS2		6DY2		9EA3
	2LS3		6DY3		
	2RV2-T		6EB2-E	6EX2-A	2GS2
	4AC2		6EB2-M		2GS3
	4DY2		9DY2		2LS2
	4EA2-E		9DY3		2LS3
	4EA2-M				4GS2
	4RLS2	6EB2-M	SDY2		4LS2
	4RV2-T		4DY2		4SF2
	4SF2		4SF2		6GS2
	4SF3		6DY2		6LS2
			6DY3		
			6EB2-M		
			9DY2		
			9DY3		

Pursuant to Orders No. 6 & 7 in Docket U-90-26

RECEIVED
NOV 21 1990
State of Alaska
Public Utilities Commission

TELEPHONE EXCHANGE CARRIERS OF ALASKA

ACCESS SERVICES

11. Access Service Interfaces and Transmission Specifications (Cont'd)

11.2 Special Access Service (Cont'd)

11.2.2 Network Channel Interface (NCI) Codes (Cont'd)

(C) Compatible Network Channel Interfaces (Cont'd)

(1) Voice Grade (Cont'd)

Compatible CIs		Compatible CIs		Compatible CIs	
6EX2-B	2GO3	8EB2-E	2AC2	8EB2-M	2AC2
	2LA2		2DY2		2DY2
	2LB2		2LA2		2LA2
	2LC2		2LB2		2LB2
	2LO2		2LC2		2LC2
	2LO3		2LO3		2LO3
	2LR2		2LS2		2LS2
	4LR2		2LS3		2LS3
	4SF2		2RV2-T		2RV2-T
			4AC2		4AC2
6GO2	2GO2		4DY2		4DY2
	2GS2		4LS2		4LS2
	2GS3		4RV2-T		4RV2-T
	4GS2		4SF2		4SF2
	4SF2		4SF3		4SF3
	6GS2		6DY2		6DY2
			6DY3		6DY3
6LO2	2LS2		6EB2-E		6EB2-E
	2LS3		6EB2-M		6BE2-M
	4LS2		6LS2		6LS2
	4SF2		8EB2-E		8EB2-M
	6LS2		8EB2-M		9DY2
			9DY2		9DY3
6LS2	2LA2		9DY3		
	2LB2				
	2LC2				
	2LO2				
	2LO3				
	4SF2				

Pursuant to Orders No. 6 & 7 in Docket U-90-26

RECEIVED
NOV 21 1990
State of Alaska
Public Utilities Commission

ACCESS SERVICES

11. Access Service Interfaces and Transmission Specifications (Cont'd)

11.2 Special Access Service (Cont'd)

11.2.2 Network Channel Interface (NCI) Codes (Cont'd)

(C) Compatible Network Channel Interfaces (Cont'd)

(1) Voice Grade (Cont'd)

Compatible CIs		Compatible CIs		Compatible CIs	
8EC2	2DY2	9DY2	2DY2	9EA3	2DY2
	4DY2		4DY2		4DY2
	4EA2-E		6DY2		4EA2-E
	4EA2-M		6DY3		4EA2-M
	4SF2		9DY2		6DY2
	6DY2				6DY3
	6DY3	9DY3	2DY2		6EA2-E
	6EA2-E		4DY2		6EA2-M
	6EA2-M		6DY2		6EB2-E
	6EB2-E		6DY3		6EB2-M
	6EB2-M		9DY2		8EB2-E
	8EB2-E		9DY3		8EB2-M
	8EB2-M				9DY2
	9DY2	9EA2	2DY2		9DY3
	9DY3		4DY2		9EA3
	9EA2		4EA2-E		
	9EA3		4EA2-M		
			6DY2		
			6DY3		
			6EA2-E		
			6EA2-M		
			6EB2-E		
			6EB2-M		
			8EB2-E		
			8EB2-M		
			9DY2		
			9DY3		
			9EA2		
			9EA3		

Pursuant to Orders No. 6 & 7 in Docket U-90-26

RECEIVED
NOV 21 1990
State of Alaska
Public Utilities Commission

ACCESS SERVICES

11. Access Service Interfaces and Transmission Specifications (Cont'd)

11.2 Special Access Service (Cont'd)

11.2.2 Network Channel Interface (NCI) Codes (Cont'd)

(C) Compatible Network Channel Interfaces (Cont'd)

(2) Program Audio

Compatible CIs		Compatible CIs	
2PG2-1	2PG1-1	4DS8-15E	2PG1-3
	2PG2-1		2PG2-3
2PG2-3	2PG1-3	4DS8-15F	2PG1-5
	2PG2-3		2PG2-5
2PG2-5	2PG1-5	4DS8-15G	2PG1-8
	2PG2-5		2PG2-8
2PG2-8	2PG1-8	4DA8-15H	2PG1-1
	2PG2-8		2PG2-1

Pursuant to Orders No. 6 & 7 in Docket U-90-26

RECEIVED
NOV 21 1990
State of Alaska
Public Utilities Commission

TELEPHONE EXCHANGE CARRIERS OF ALASKA

ACCESS SERVICES

11. Access Service Interfaces and Transmission Specifications (Cont'd)

11.2 Special Access Service (Cont'd)

11.2.2 Network Channel Interface (NCI) Codes (Cont'd)

(C) Compatible Network Channel Interfaces (Cont'd)

(3) Video

Compatible CIs		Compatible CIs	
2TV6-1	4TV6-15 4TV7-15	4TV7-5	4TV6-5 4TV7-5
2TV6-2	6TV6-15 6TV7-15	4TV7-15	4TV6-15 4TV7-15
2TV7-1	4TV6-15 4TV7-15	6TV6-5	6TV6-5 6TV7-5
2TV7-2	6TV6-15 6TV7-15	6TV6-15	6TV6-15 6TV7-15
4TV6-5	4TV6-5 4TV7-5	6TV7-5	6TV6-5 6TV7-5
4TV6-15	4TV6-15 4TV7-15	6TV7-15	6TV6-15 6TV7-15

Pursuant to Orders No. 6 & 7 in Docket U-90-26

RECEIVED
JUN 19 1996
State of Alaska
Public Utilities Commission

11. Access Service Interfaces and Transmission Specifications (Cont'd)

11.2 Special Access Service (Cont'd)

11.2.2 Network Channel Interface (NCI) Codes (Cont'd)

(C) Compatible Network Channel Interfaces (Cont'd)

(4) Digital Data

Compatible CIs		Compatible CIs		Compatible CIs		
4DS8-15	4DS8-15+	4DU5-24	4DU5-24	6DU5-24	6DU5-24	
	4DU5-24					
	4DU5-48	4DU5-48	4DU5-48	6DU5-48	6DU5-48	
	4DU5-56					
	4DU5-96	4DU5-96	4DU5-96	6DU5-56	6DU5-56	
	6DU5-24					(N)
	6DU5-48					
	6DU5-96	4DU8-56	4DU5-56	6DU5-96	6DU5-96	

+ Available only as a cross connect of two digital channels at appropriate digital speeds at a Telephone Company hub.

RECEIVED

JUN 1 1 2009

STATE OF ALASKA
REGULATORY COMMISSION OF ALASKA

ACCESS SERVICES

11. Access Service Interfaces and Transmission Specifications (Cont'd)

11.2 Special Access Service (Cont'd)

11.2.2 Network Channel Interface (NCI) Codes (Cont'd)

C. Compatible Network Channel Interfaces (Cont'd)

5. High Capacity

Compatible CIs		Compatible CIs	
4DSO-63	4DSO-63 4DU8-A, B or C 6DU8-A, B or C	4DS8-15J	4DU8-A 6DU8-A
		4DS8-15K	4DU8-B 4DU8-C 6DU8-B 6DU8-C
4DS6-27	4DS6-27 4DU8-A, B or C 6DU8-A, B or C		
4DS6-44	4DS6-44 4DU8-A, B or C 6DU8-A, B or C	4DS8-31	4DS8-31 4DU8-A, B or C 6DU8-A, B or C
4DS8-15	4DS8-15+ 4DU8-B 6DU8-8	4DU8-A, B or C	4DU8-A, B or C

6. Synchronous Optical Channel Service (N)

Compatible CIs		Compatible CIs	
4DS9-1S	4DU9-1S	2SOF-A	2SOF-A
4DS9-1K	4DU9-1K	2SOF-B	2SOF-B
		2SOF-C	2SOF-C
		2SOF-D	2SOF-D
		2SOF-E	2SOF-E
		2SOF-F	2SOF-F

The following network channel interfaces (NCIs) define the bit rates that are available for a synchronous optical channel:

NCI	Bit Rate
FCF-B	155.52 Mbps (OC3, OC3c)
FCF-D	622.08 Mbps (OC12) (N)

\+ Available only as a cross connect of two individual channels of 1.544 Mbps facilities at a Telephone Company hub.

RECEIVED

JUN 1 1 2009

STATE OF ALASKA
REGULATORY COMMISSION OF ALASKA

ACCESS SERVICES

12. Public Packet Data Network

Public Packet Data Networks utilize separate data networks, comprised of switching and transmission facilities. The networks provide for the transfer of data provided by a customer in a frame format. The data is separated into discrete segments for transmission through the public packet data network.

12.1 Frame Relay Access Service

12.1.1 General

Frame Relay Access Service (FRAS) is a medium-speed, connection-oriented packet-switched data service that allows for the interconnection of Local Area Networks (LANs) or other compatible end user customer premises equipment for the purpose of connecting to an access customer's intrastate network. The terminal equipment accumulates the customer data and puts it into a frame relay format suitable for transmission over the FRAS network. This terminal equipment must conform to American National Standards Institute and Committee Consultant de International Telegraphique et Telephonique (CCITT) standards.

FRAS permits customers to share network bandwidth for data transmissions.

Rates and charges for FRAS are set forth in Section 13.4.1 and Section 14, following. The application of rates for FRAS is described in 12.1.2 following. (N)

In addition to the regulations and charges specified in this section, the general regulations and charges specified in other sections of this tariff apply as appropriate.

RECEIVED
APR 30 1997
ALASKA PUBLIC UTILITIES COMM.

12. Public Packet Data Network (Cont'd) (N)

12.1 Frame Relay Access Service (Cont'd)

12.1.1 General (Cont'd)

(B) Service Description

FRAS is a transport service that facilitates the exchange of variable length information units (frames) between customer connections. Frames travel a fixed path through the network with an address that specifies the permanent virtual connection. Addresses are read by the network processor and the frames are relayed to the preassigned destination.

The service includes: the End User Port connection, the Access Customer Port connection, and Permanent Virtual Connections (PVC) which have associated Committed Information Rates (CIRs). A special access facility (ordered out of Section 7 preceding) is used to connect to the frame relay switch.

The End User Port connection permits FRAS compatible end user customer premises equipment (CPE) to originate or terminate an intrastate access service. Connections between end user customer premises equipment and the telephone company frame relay switch are available at speeds of 56.0 kbps, 64.0 kbps, or 1.544 Mbps. Each End User Port connection requires the identification of a corresponding terminating port connection(s).

The Access Customer Port connection connects the telephone company frame relay switch and the access customer's network. The facility connecting an access customer network to the telephone company frame relay switch is offered only at 1.544 Mbps. (N)

RECEIVED
APR 30 1997
ALASKA PUBLIC UTILITIES COMM.

ACCESS SERVICES

12. Public Packet Data Network (Cont'd) (N)

12.1 Frame Relay Access Service (Cont'd)

12.1.1 General (Cont'd)

(B) Service Description (Cont'd)

Connections are provided via Channel Terminations (see Section 7 Special Access Digital Data and High Capacity Services preceding). All regulations, rates and charges as specified in Section 7 will apply in addition to the rates and charges associated with FRAS.

All End User Port Connections must be in conformance with American National Standards Institute (ANSI) standards T1.606-1990, T1.606 Addendum 1-1991, T1.606a-1992, T1.617, Annex D-1992. All Access Customer Port connections must be in conformance with ANSI standards T1.606b-1993 and Bellcore Technical Reference TR-TSV-001370, Issued: May 1993.

PVCs are software defined, end-to-end, bi-directional communications paths that are established and dis-established via the access service order process. While no physical circuits are dedicated, the two network addresses (one from each port connection) are connected electronically to form a PVC.

There are two types of PVCs available. The standard PVC establishes a communications path between two ports on the same frame relay switch. The extended PVC establishes a communications path between two ports on two interconnected telephone company frame relay switches. (N)

RECEIVED
APR 30 1997
ALASKA PUBLIC UTILITIES COMM.

12. Public Packet Data Network (Cont'd) (N)

12.1 Frame Relay Access Service (Cont'd)

12.1.1 General (Cont'd)

(B) Service Description (Cont'd)

At the time service is ordered the number of PVCs will be identified along with their Committed Information Rates. CIR is the bit rate at which the FRAS network commits to transfer data. Committed Information Rates provide for frame relay switch throughput at designated speeds. (See 12.1.2 (A)(3) following.) This information is required for network routing purposes.

(C) Ordering Options and Conditions

Frame Relay Access Service is ordered under the Access Order provisions set forth in Section 5 preceding. Also included in that section are other charges which may be associated with ordering FRAS (e.g., Service Date Change Charges, Cancellation Charges, etc.)

A minimum of two FRAS port connections are required for data to be transported between customer designated premises.

When placing an order for FRAS the customer must specify:

- the number of Permanent Virtual Connections (PVCs) required;
- the location of the ports for each PVC;
- the Committed Information Rates (CIRs) that will be associated with each PVC;
- that the traffic consists of less than ten percent interstate traffic and more than ten percent intrastate traffic. (N)

RECEIVED
APR 30 1997
ALASKA PUBLIC UTILITIES COMM.

12. Public Packet Data Network (Cont'd) (N)

12.1 Frame Relay Access Service (Cont'd)

12.1.1 General (Cont'd)

(C) Ordering Options and Conditions (Cont'd)

The port connecting the special access facility to the telephone company frame relay switch must be ordered and provided at the same speed as the special access facility.

When connecting to the port of another customer, the ordering customer must obtain authorization from the other customer.

When an extended PVC is ordered, the customer is responsible for placing the order with all telephone companies involved.

(D) Acceptance Testing

At no additional charge, the Telephone Company will, at the customer's request, cooperatively test at the time of installation. (N)

RECEIVED
APR 30 1997
ALASKA PUBLIC UTILITIES COMM.

12. Public Packet Data Network (Cont'd) (N)

12.1 Frame Relay Access Service (Cont'd)

12.1.2 Rate Regulations

This section contains the specific regulations governing the rates and charges that apply for Frame Relay Access Service.

(A) Rate Categories

The following diagrams depict a generic view of the components of FRAS and the manner in which the components are combined to provide Frame Relay Access Service and Interconnected Frame Relay Access Service.

Frame Relay Access Service

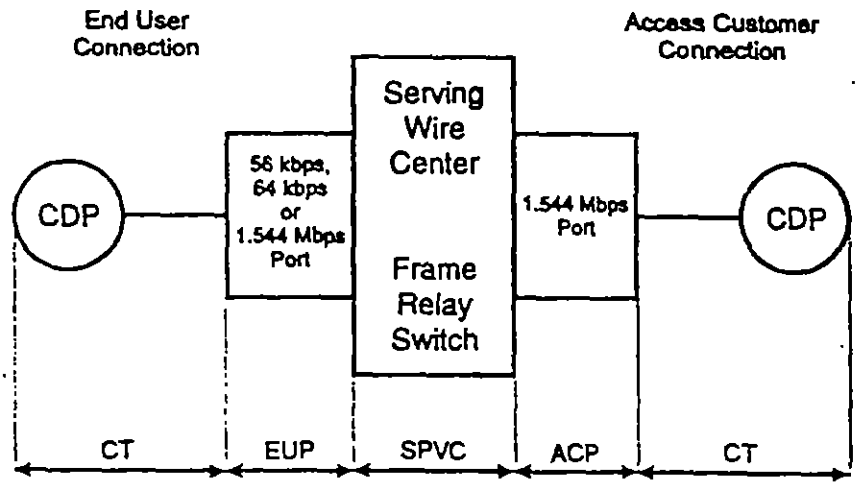

CDP - Customer Designated Premises
CT - Channel Termination
EUP - End User Port
SPVC - Standard Permanent Virtual Connection
ACP - Access Customer Port

(N)

RECEIVED
JUN 24 1997
ALASKA PUBLIC UTILITIES COMM.

ACCESS SERVICES

12. Public Packet Data Network (Cont'd) (N)

12.1 Frame Relay Access Service (Cont'd)

12.1.2 Rate Regulations (Cont'd)

(A) Rate Categories (Cont'd)

Frame Relay Access Service

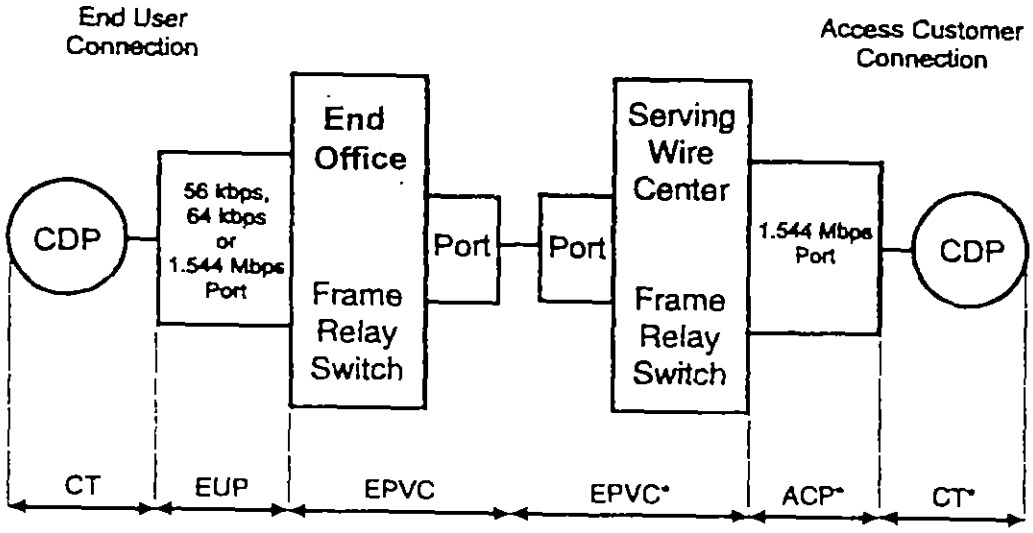

(N)

CDP - Customer Designated Premises
CT - Channel Termination
EUP - End User Port
EPVC - Extended Permanent Virtual Connection
ACP - Access Customer Port

RECEIVED
APR 30 1997
ALASKA PUBLIC UTILITIES COMM.

ACCESS SERVICES

12. Public Packet Data Network (Cont'd) (N)

12.1 Frame Relay Access Service (Cont'd)

12.1.2 Rate Regulations (Cont'd)

(A) Rate Categories (Cont'd)

(1) End User Port

The End User Port is the physical location in the telephone company switching office where the special access facility of the customer connects to the FRAS Network. It receives the data frame from the end user customer's Local Area Network or other compatible CPE device and verifies that the end user connection and the corresponding access customer connection are valid before relaying the frame to the destination end point.

The End User Port consists of either a 56.0 kbps, 64.0 kbps, or a 1.544 Mbps port interface connection. The port connecting the special access facility to the telephone company frame relay switch must be ordered and provided at the same speed as the special access facility. (N)

RECEIVED
APR 30 1997
ALASKA PUBLIC UTILITIES COMM.

ACCESS SERVICES

12. Public Packet Data Network (Cont'd) (N)

12.1 Frame Relay Access Service (Cont'd)

12.1.2 Rate Regulations (Cont'd)

(A) Rate Categories (Cont'd)

(2) Access Customer Port

The Access Customer Port is the physical location in the telephone company switching offices where the access customer's special access facility connects to the telephone company's FRAS network. It specifies how a frame relay switch sends and receives data from a frame relay access customer's network. The Access Customer Port is offered at a speed of 1.544 Mbps. The port connecting the special access facility to the telephone company frame relay switch must be ordered and provided at the same speed as the special access facility.

(3) Permanent Virtual Connection (PVC)

A PVC is a software defined communications path between two port connections within the FRAS network. (N)

RECEIVED
JUN 24 1997
ALASKA PUBLIC UTILITIES COMM.

ACCESS SERVICES

12. Public Packet Data Network (Cont'd) (N)

12.1 Frame Relay Access Service (Cont'd)

12.1.2 Rate Regulations (Cont'd)

(A) Rate Categories (Cont'd)

(3) Permanent Virtual Connection (PVC) (Cont'd)

Each PVC is provisioned with a customer selected Committed Information Rate. The CIR is a transmission speed specified by the customer. CIRs range from 8 kbps to 768 kbps. The telephone company will provide switch capacity to permit the customer to transmit information with guaranteed delivery at the specified CIR. The telephone company will permit customers to attempt to transmit at speeds up to two times the CIR with no guarantee of completion. Attempted transmissions at above two times the CIR will not be permitted.

Customers will be permitted to order multiple PVCs on a given port subject to switch limitations. Customers anticipating non-simultaneous transmission may order CIRs assigned to these multiple PVCs, the sum of which may theoretically exceed the actual throughput of the port. However, when simultaneous transmission of multiple PVCs occurs, the total of the transmission rate (CIRs) may not exceed the actual throughput of the port.

There are two types of PVCs available. The standard PVC establishes a communications path between the End User Port and the Access Customer Port on the same frame relay switch. The extended PVC establishes a communications path between the End User Port on a frame relay switch and an Access Customer Port on another interconnected frame relay switch. The EPVC establishes a communications path between the end user port on a frame relay switch and an access customer port on another interconnected frame relay switch within the same local service calling area. (N)

RECEIVED

JUN 1 1 2009

STATE OF ALASKA
REGULATORY COMMISSION OF ALASKA

ACCESS SERVICES

12. Public Packet Data Network (Cont'd)

12.1 Frame Relay Access Service (Cont'd)

12.1.2 Rate Regulations (Cont'd)

B. Types of Rates and Charges

There are two types of rates and charges. They are monthly rates and nonrecurring charges. The rates and charges are described as follows:

1. Monthly Rates

Monthly rates are recurring rates that apply each month or fraction thereof that a FRAS is provided. For billing purposes, each month is considered to have 30 days.

2. Nonrecurring Charges

Nonrecurring charges are one-time charges that apply for specific work activity (i.e., installation or change to an existing service). The types of nonrecurring charges that apply for FRAS are: installation of service and service rearrangements. These charges are in addition to the Access Order Charge as specified in Section 13 and Section 14, following: (N)

a. Installation of Service

Nonrecurring charges apply for the installation of PVCs.

RECEIVED
APR 30 1997
ALASKA PUBLIC UTILITIES COMM.

ACCESS SERVICES

12. Public Packet Data Network (Cont'd) (N)

12.1 Frame Relay Access Service (Cont'd)

12.1.2 Rate Regulations (Cont'd)

(B) Types of Rates and Charges (Cont'd)

(2) Nonrecurring Charges (Cont'd)

(b) Service Rearrangements

Service Rearrangements are changes to existing (installed) services.

A PVC Rearrangement Charge will be applied whenever a change is made to the CIR of an existing PVC after initial port installation and/or a change is made to the terminating port destination of the PVC.

Administrative changes will be made without charge(s) to the customer. Administrative changes are as follows:

- Change of customer name,
- Change of customer or customer's end user premises address when the change of address is not a result of physical relocation of equipment,
- Change in billing data (name, address, or contact name or telephone number),
- Change of agency authorization,
- Change of customer circuit identification,
- Change of billing account number,
- Change of customer or customer's end user contact name or telephone number, and
- Change of jurisdiction. (N)

RECEIVED
APR 30 1997
ALASKA PUBLIC UTILITIES COMM.

TELEPHONE EXCHANGE CARRIERS OF ALASKA

ACCESS SERVICES

12. Public Packet Data Network (Cont'd) (N)

12.1 Frame Relay Access Service (Cont'd)

12.1.2 Rate Regulations (Cont'd)

(C) Minimum Period

The minimum period for FRAS is one month and the full monthly rate will apply to the first month. Adjustments for quantities of services established or discontinued in any billing period beyond the minimum period are as set forth in 2.4.2. The minimum period for the Frame Relay Service 1.544 Mbps port are as set forth in 2.4.2(A). (N)

Tariff Advice No. 34 Effective: June 27, 1997

Issued:
Issued By: Alaska Exchange Carriers Association, Inc.
By: Ruth A. Stocker Title: President

RECEIVED

JUN 1 1 2009

STATE OF ALASKA
REGULATORY COMMISSION OF ALASKA

ACCESS SERVICES

12. Public Packet Data Network (Cont'd)

12.1.3 Ethernet Transport Service (N)

A. General

Ethernet Transport Service (ETS) is a high speed data transport service that provides end-to-end transmission using Ethernet packet technology at transport speeds ranging from 5 Mbps to 1 Gbps, where available. ETS is ideal for transport of broadband multimedia traffic (i.e., voice, data and video) using variable length Ethernet packets with the ability to interconnect multiple locations using the Telephone Company's ETS network. Ethernet packets generated by Ethernet-compatible customer premises equipment (CPE) are transmitted using available capacity on shared transmission paths through the Telephone Company's ETS network to a pre-specified destination. The ETS customer may use ETS to:

1. interconnect customer designated premises (CDPs) served by the Telephone Company's ETS network,
2. interconnect with its local area network (LAN) to the Telephone Company's ETS network and/or,
3. interconnect its CDPs to an Ethernet network located outside of the Telephone Company's serving territory.

B. Service Description

ETS is provided using a combination of ETS Channel Terminations (ETS CTs), ETS Ports, ETS Ethernet Virtual Connections (ETS EVCs), and ETS Extended Ethernet Virtual Connections (ETS E-EVCs). As described below, ETS may be used in conjunction with Special Access High Capacity DS3 and Synchronous Optical Channel Service OC3 and OC12 Services as specified in Section 7, preceding.

An ETS Port is required to provide the interface into the Telephone Company's ETS network. ETS EVCs establish a shared transmission path between any two ETS Ports on the Telephone Company's ETS network. ETS E-EVCs may be ordered to connect the Telephone Company's ETS network to an adjacent telephone company's Ethernet network. (N)

RECEIVED
JUL 2 2 2009
STATE OF ALASKA
REGULATORY COMMISSION OF ALASKA

12. Public Packet Data Network (Cont'd)

12.1.3 Ethernet Transport Service (Cont'd) (N)

B. Service Description (Cont'd)

The transmission quality of ETS is not guaranteed and is offered to ETS customers at a best effort level. The Telephone Company will attempt to deliver all Ethernet packets received; however, network congestion may result in a loss of Ethernet packets. Transmission speeds using copper facilities may be affected by distance from the Telephone Company central office and other technical limitations in the Telephone Company's copper network and are also not guaranteed.

Service is provided, where available, between CDPs and designated Telephone Company Serving Wire Centers (SWCs). ETS will be furnished where suitable facilities exist as determined by the Telephone Company. The Telephone Company will identify its ETS-equipped Serving Wire Centers (SWCs) in the National Exchange Carrier Association, Inc. Tariff F.C.C. No. 4.

Rates and charges for ETS are specified in Section 14, following. The application of rates and charges for ETS is described later in this section.

C. Obligations of the Customer

In addition to the regulations described in other sections of this tariff, the following provisions apply to ETS:

1. The ETS customer is responsible for providing the Telephone Company with the necessary information to provision ETS as specified in Section 5 Ordering Requirements, preceding.
2. The ETS customer is responsible for providing and maintaining all required customer premises equipment (CPE), which is compatible with ETS and complies with the standards specified in Technical Reference IEEE Standard 802.3, Part 3.

(N)

RECEIVED
JUN 1 1 2009
STATE OF ALASKA
REGULATORY COMMISSION OF ALASKA

12. Public Packet Data Network (Cont'd)

12.1.3 Ethernet Transport Service (Cont'd) (N)

D. Rate Regulations

This section contains the regulations governing the rates and charges that apply for ETS. Regulations governing the rates and charges for Special Access Service provided under this tariff used in conjunction with ETS are as specified in Section 7, preceding.

The following diagrams depict generic views of the elements of ETS. In the first figure, the ETS customer's CDPs are served by a single ETS SWC. ETS EVCs ordered between two ETS Ports in the same SWC are classified as ETS Intraswitch EVCs. The ETS customer orders the applicable ETS elements from the Telephone Company pursuant to the provisions specified in this section.

Figure 1

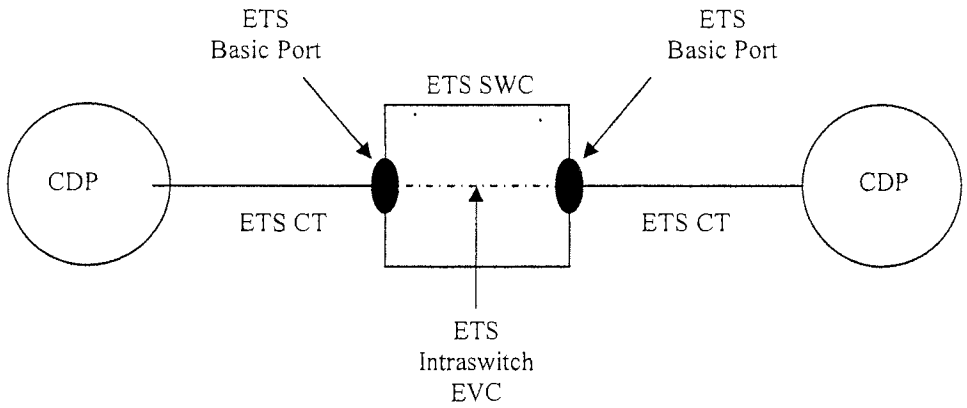

(N)

RECEIVED
JUN 1 1 2009
STATE OF ALASKA
PROCUREMENT ADMINISTRATOR OF ALASKA

12. Public Packet Data Network (Cont'd)

12.1.3 Ethernet Transport Service (Cont'd) (N)

D. Rate Regulations (Cont'd)

In the second figure, the ETS customer's CDPs are served by different ETS SWCs. ETS EVCs ordered between two ETS Ports in different SWCs are classified as ETS Interswitch EVCs. The ETS customer orders the applicable ETS elements from the Telephone Company pursuant to the provisions specified in this section.

Figure 2

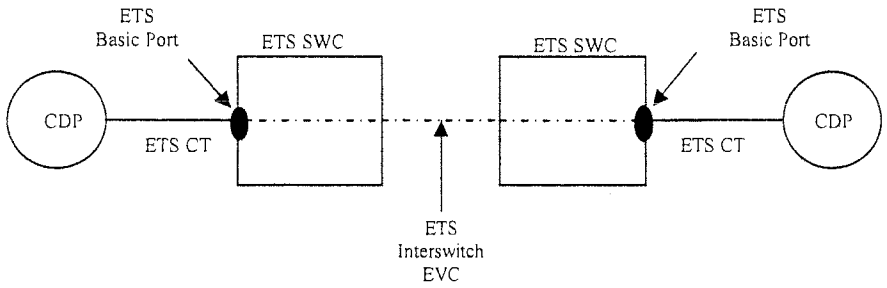

In the third figure, one of the ETS customer's CDPs is served by a non-ETS SWC. The ETS customer orders the applicable ETS elements from the Telephone Company pursuant to the provisions specified in this section and the applicable Special Access facilities pursuant to the provisions specified in Section 7, preceding.

Figure 3

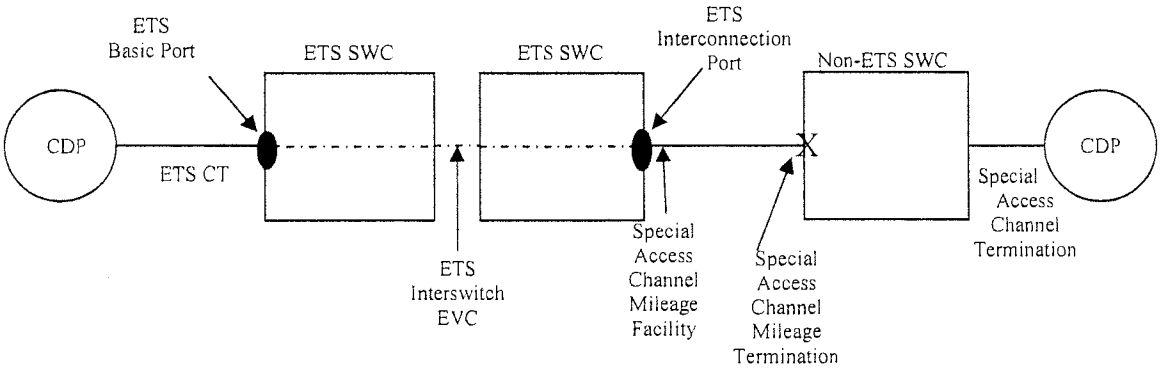

(N)

RECEIVED
JUN 11 2009
STATE OF ALASKA
REGULATORY COMMISSION OF ALASKA

ACCESS SERVICES

12. Public Packet Data Network (Cont'd)

12.1.3 Ethernet Transport Service (Cont'd) (N)

D. Rate Regulations (Cont'd)

In the fourth figure, a multipoint configuration is depicted where the customer chose to order Special Access Service to an ETS SWC. The ETS customer orders the applicable ETS elements from the Telephone Company pursuant to the provisions specified in this section and the applicable Special Access facilities pursuant to the provisions specified in Section 7, preceding

Figure 4

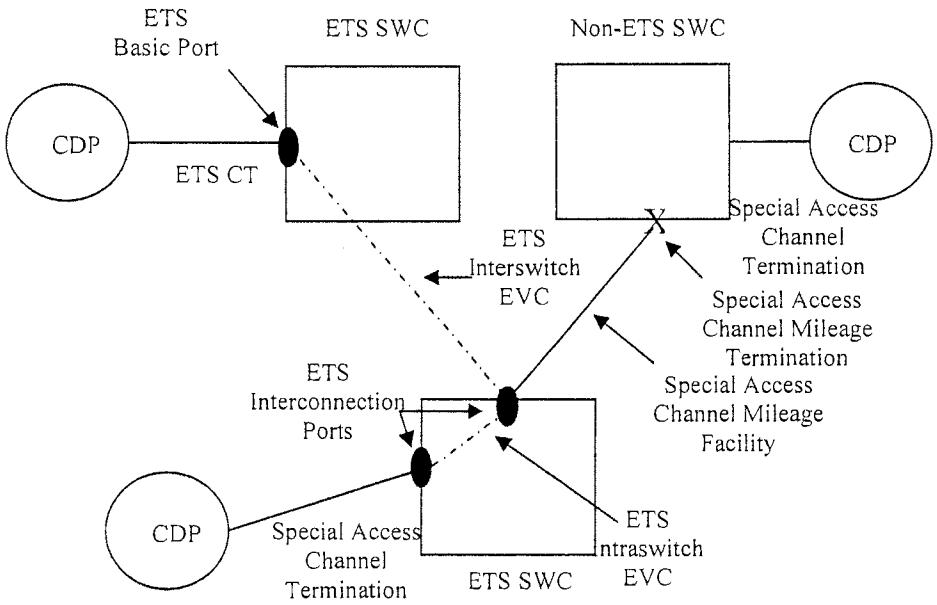

(N)

RECEIVED
JUL 2 2 2009
STATE OF ALASKA
REGULATORY COMMISSION OF ALASKA

12. Public Packet Data Network (Cont'd)

12.1.3 Ethernet Transport Service (Cont'd) (N)

D. Rate Regulations (Cont'd)

In the fifth figure, one of the ETS customer's CDPs is served by an adjacent telephone company's Ethernet network. The ETS customer orders the applicable ETS elements from the Telephone Company pursuant to the provisions specified in this section. In addition, the ETS customer will order the applicable Ethernet service elements from the adjacent telephone company.

Figure 5

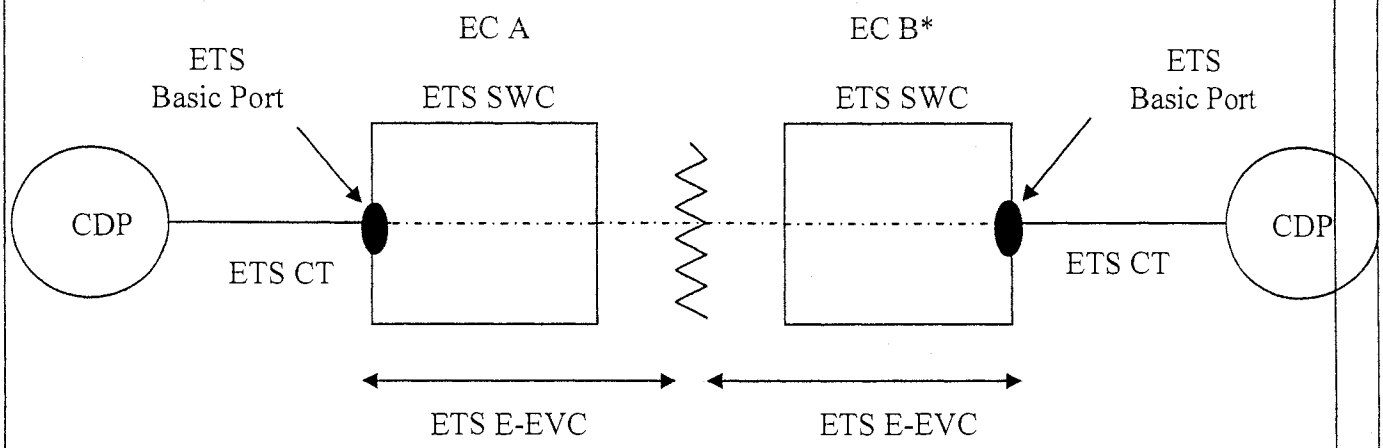

*If EC B is a non-AECA company, the application of charges will depend on the LEC's access tariff.

(N)

RECEIVED

JAN 19 2011

STATE OF ALASKA
REGULATORY COMMISSION OF ALASKA

ACCESS SERVICES

12. Public Packet Data Network (Cont'd)

12.1.3 Ethernet Transport Service (Cont'd)

D. Rate Regulations (Cont'd)

In the sixth figure, one of the ETS customer's CDPs is served by a non-adjacent telephone company's Ethernet network. When the number of airline miles between the ETS SWCs serving the ETS customer's CDPs is greater than fifty, the ETS customer orders the applicable ETS elements from the Telephone Company pursuant to the provisions specified in this section and applicable Special Access facilities pursuant to the provisions specified in Section 7, preceding. In addition, the ETS customer will order the applicable special access service and Ethernet service elements from the interconnecting telephone companies. (C) | (C)

Figure 6

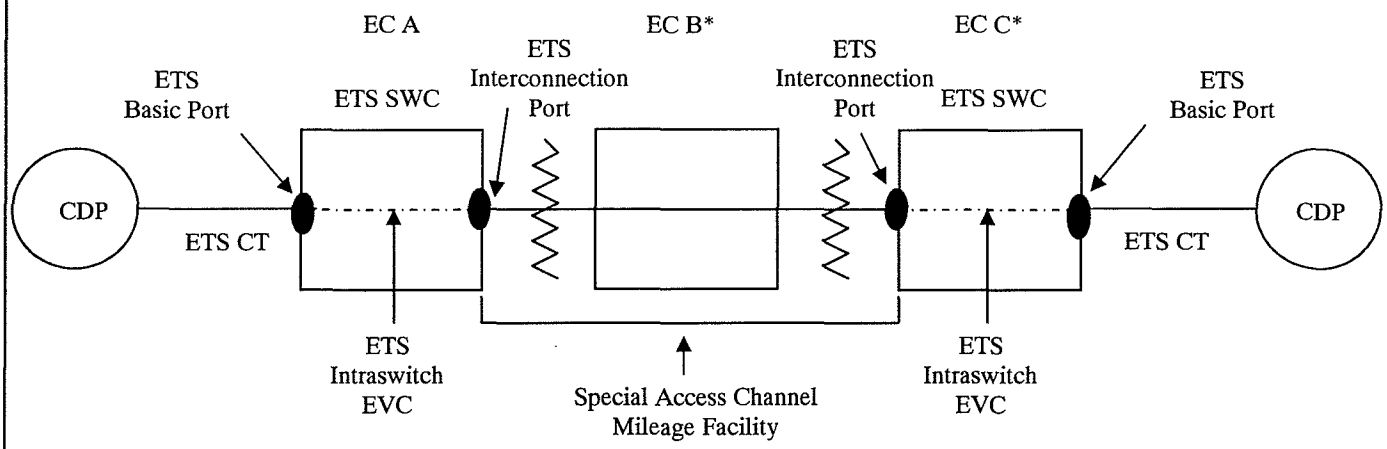

*If EC B is a non-AECA company, the application of charges will depend on the LEC's access tariff.

RECEIVED
JUN 11 2009
STATE OF ALASKA
REGULATORY COMMISSION OF ALASKA

12. Public Packet Data Network (Cont'd)

12.1.3 Ethernet Transport Service (Cont'd) (N)

D. Rate Regulations (Cont'd)

1. Rate Categories

The various ETS service elements are described below.

a. ETS Channel Terminations (CTs)

An ETS CT provides the transport facility between the customer's designated premises and an ETS Basic Port at the Telephone Company's ETS SWC.

ETS CTs are available at bandwidth speeds of 10 Mbps, 20 Mbps, 50 Mbps, 100 Mbps, 500 Mbps, and 1 Gbps. The ETS customer orders the type of ETS CT it needs based on its bandwidth requirements. Bandwidth speeds of 50 Mbps and above require use of a fiber loop facility, where such fiber facilities exist. ETS CTs are available only from suitably equipped ETS SWCs for connection to ETS Basic Ports.

A Special Access High Capacity DS3 or Synchronous Optical Channel Service OC3 or OC12 Channel Termination may also be used to connect a CDP to the Telephone Company's ETS SWC for connection to an ETS Interconnection Port. The provisions for Special Access Channel Terminations are specified in Section 7, preceding.

Monthly and nonrecurring charges apply for each ETS CT ordered. The monthly rate is based upon the bandwidth capacity ordered and whether the CDP is located within 300 feet of the ETS SWC or more than 300 feet from the ETS SWC. Rates and charges are specified in Section 14, following.

(N)

RECEIVED
JUN 1 1 2009
STATE OF ALASKA
REGULATORY COMMISSION OF ALASKA

ACCESS SERVICES

12. Public Packet Data Network (Cont'd)

12.1.3 Ethernet Transport Service (Cont'd) (N)

D. Rate Regulations (Cont'd)

1. Rate Categories (Cont'd)

b. ETS Ports

ETS Ports provide the interface at the Telephone Company's ETS SWC for data traffic to and from the customer premises equipment as well as for connecting the Telephone Company's ETS network with the Ethernet network of another telephone company. An ETS Port receives Ethernet packets from the ETS customer's Ethernet-compatible CPE, validates the addressing parameters contained in the packet headers, and transmits the packets into the ETS network. The ETS Port also receives Ethernet packets from the Telephone Company's ETS network or from an Ethernet network located outside of the Telephone Company's serving territory, validates the addressing parameters contained in the packet headers, and transmits the packets to the pre-designated CDP.

There are two types of ETS Ports available, i.e., ETS Basic Ports and ETS Interconnection Ports.

1. ETS Basic Ports provide the interface to the Telephone Company's ETS network and do not include the required transport facility between the CDP and the Telephone Company's ETS SWC.

   ETS Basic Ports are available with bandwidth speeds of 10 Mbps, 20 Mbps, 50 Mbps, 100 Mbps, 500 Mbps, and 1 Gbps. Required transport to the ETS Basic Port is provided using an ETS CT as described above. Each ETS Basic Port must be associated with a minimum of one ETS EVC, or one ETS E-EVC. An ETS Basic Port may be associated with more than one ETS EVC or ETS E-EVC. The bandwidth speed of an ETS Basic Port must be equal to or greater than the bandwidth speed of the associated ETS CT.

(N)

RECEIVED
JUN 1 1 2009
STATE OF ALASKA
REGULATORY COMMISSION OF ALASKA

ACCESS SERVICES

12. Public Packet Data Network (Cont'd)

12.1.3 Ethernet Transport Service (Cont'd) (N)

D. Rate Regulations (Cont'd)

1. Rate Categories (Cont'd)

b. ETS Ports (Cont'd)

2. ETS Interconnection Ports also provide the interface to the Telephone Company's ETS network and do not include the required transport facility between the CDP and the Telephone Company's ETS SWC. Used in conjunction with Special Access DS3, OC3 and/or OC12 Services, ETS Interconnection Ports permit the ETS customer to: a) connect a CDP serviced by an ETS or non-ETS SWC to the Telephone Company's ETS network or b) interconnect the Telephone Company's ETS network to an Ethernet network located in the serving territory of a non-adjacent telephone company.

   ETS Interconnection Ports are available at bandwidth speeds of 44.736 Mbps (DS3), 155.52 Mbps (OC3) and 622.08 Mbps (OC12).

   Required transport to the ETS Interconnection Port is provided using Special Access DS3, OC3 and/or OC12 Service facilities as described in Section 7, preceding. Each ETS Interconnection Port must be associated with a minimum of one ETS EVC, or one ETS E-EVC or an access service connection function. An ETS Interconnection Port may be associated with more than one ETS EVC or ETS E-EVC. The bandwidth speed of an ETS Interconnection Port must be equal to the bandwidth speed of the associated Special Access Service Channel Termination.

Monthly and nonrecurring charges apply for each ETS Port ordered. The monthly recurring charge is determined by the capacity and type of ETS Port ordered. Rates and charges are specified in Section 14, following.

(N)

RECEIVED
JUN 1 1 2009
STATE OF ALASKA
REGULATORY COMMISSION OF ALASKA

ACCESS SERVICES

12. Public Packet Data Network (Cont'd)

12.1.3 Ethernet Transport Service (Cont'd) (N)

D. Rate Regulations (Cont'd)

1. Rate Categories (Cont'd)

c. ETS Ethernet Virtual Connections (ETS EVCs)

ETS EVCs are logical associations established by the Telephone Company across a shared transmission path that allow the ETS customer to transmit packets between any two ETS Ports located on the Telephone Company's ETS network. ETS EVCs are available in fixed bandwidth amounts of 5 Mbps, 10 Mbps, 20 Mbps, 50 Mbps, 100 Mbps, 500 Mbps, and 1 Gbps. The Telephone Company will establish ETS EVCs based upon the bandwidth capacity specified by the ETS customer on its Access Order. When ETS EVCs are ordered between two ETS Ports in the same SWC, the ETS customer will be charged the ETS Intraswitch EVC rate. When ETS EVCs are ordered between ETS Ports that are in different SWCs within the Telephone Company's serving territory, the ETS customer will be billed the ETS Interswitch EVC rate.

Monthly and nonrecurring charges apply for each ETS EVC ordered. The monthly recurring charge is based upon the bandwidth capacity ordered and whether the associated ETS Ports are located within one SWC (Intraswitch) or between different SWCs (Interswitch). Rates and charges are specified in Section 14, following.

(N)

RECEIVED
JUN 11 2009
STATE OF ALASKA
REGULATORY COMMISSION OF ALASKA

12. Public Packet Data Network (Cont'd)

12.1.3 Ethernet Transport Service (Cont'd) (N)

D. Rate Regulations (Cont'd)

1. Rate Categories (Cont'd)

d. ETS Extended Ethernet Virtual Connections (ETS E-EVCs)

ETS E-EVCs are logical associations established by the Telephone Company across a shared transmission path that allow the ETS customer to transmit packets to and receive packets from an ETS Port located in the Telephone Company's ETS network to another telephone company's Ethernet network located in an adjacent serving territory. ETS E-EVCs can be established between two ETS Basic Ports, between two ETS Interconnection Ports or between an ETS Basic Port and an ETS Interconnection Port. ETS E-EVCs are available in fixed bandwidth amounts of 5 Mbps, 10 Mbps, 20 Mbps, 50 Mbps, 100 Mbps, 500 Mbps, and 1 Gbps. The Telephone Company will establish ETS E-EVCs based upon the bandwidth capacity specified by the ETS customer on its Access Order.

Monthly and nonrecurring charges apply for each ETS E-EVC ordered. The ETS E-EVC monthly recurring charge is based upon the bandwidth capacity of the ETS E-EVC ordered. Rates and charges are specified in Section 14, following.

(N)

RECEIVED
JUN 11 2009
STATE OF ALASKA
REGULATORY COMMISSION OF ALASKA

ACCESS SERVICES

12. Public Packet Data Network (Cont'd)

12.1.3 Ethernet Transport Service (Cont'd) (N)

D. Rate Regulations (Cont'd)

2. Types of Rates and Charges

There are two types of rates and charges. They are monthly rates and nonrecurring charges. The rates and charges are described below:

a. Monthly Rates

Monthly rates are recurring rates that apply each month or fraction thereof when an ETS service element is provided. For billing purposes, each month is considered to have 30 days.

b. Nonrecurring Charges

Nonrecurring charges are one-time charges that apply for specific work activity (i.e., installation or change to an existing service). The types of nonrecurring charges that apply for ETS are installation of service, service rearrangements, moves and design changes.

Except as specified below, these charges are in addition to the Access Order Charge as specified in Section 14, following.

1. Installation of Service

Nonrecurring charges apply for installation of ETS CTs, ETS Ports, ETS EVCs, ETS E-EVCs, and ETS Optional Features and Functions ordered by the ETS customer.

2. Service Rearrangements

Service rearrangements are changes to existing (i.e., installed) services, which may be administrative only in nature as set forth below or, that involve an actual physical change to the service. (N)

RECEIVED
JUN 11 2009
STATE OF ALASKA
REGULATORY COMMISSION OF ALASKA

12. Public Packet Data Network (Cont'd)

12.1.3 Ethernet Transport Service (Cont'd) (N)

D. Rate Regulations (Cont'd)

2. Types of Rates and Charges (Cont'd)

b. Nonrecurring Charges (Cont'd)

2. Service Rearrangements (Cont'd)

When the ETS customer elects to decrease the bandwidth capacity on existing ETS Ports and associated ETS CTs, the request will be considered a discontinuance of service for the former capacity and start of service for the new capacity. Associated nonrecurring (i.e., installation) charges will apply. New minimum period requirements will be established for the new ETS elements. The ETS customer will also remain responsible for satisfying all outstanding minimum period charges for the discontinued ETS elements.

When the ETS customer elects to increase the bandwidth capacity on existing ETS Ports and associated ETS CTs, the request will be considered a discontinuance of service for the former capacity and start of service for the new capacity. Associated nonrecurring (i.e., installation) charges will apply. New minimum period requirements will be established for the new ETS elements. Any outstanding minimum period charges associated with the discontinued ETS elements that would otherwise be applicable for the bandwidth capacity upgrades described in this paragraph will be waived.

(N)

RECEIVED
JUL 2 2 2009
STATE OF ALASKA
REGULATORY COMMISSION OF ALASKA

12. Public Packet Data Network (Cont'd)

12.1.3 Ethernet Transport Service (Cont'd) (N)

D. Rate Regulations (Cont'd)

2. Types of Rates and Charges (Cont'd)

b. Nonrecurring Charges (Cont'd)

2. Service Rearrangements (Cont'd)

When the ETS customer elects to change the bandwidth capacity on existing ETS EVCs and/or ETS E-EVCs ETS (i.e., the customer requests an increase or decrease in capacity), the ETS Design Change Charge described in D.2.b.4, following, will apply per ETS element changed.

When the ETS customer elects to remove existing ETS EVCs or ETS E-EVCs, the ETS Design Change Charge described in D.2.b.4, following, will apply per ETS EVC or ETS E-EVC removed.

Administrative changes will be made without charge(s) to the ETS customer. Administrative changes are as follows:

- Change of customer name,
- Change of customer or customer's end user premises address when the change of address is not a result of physical relocation of equipment,
- Change in billing data (name, address, or contact name or telephone number),
- Change of agency authorization,
- Change of customer circuit identification,
- Change of billing account number,
- Change of customer or customer's end user contact name or telephone number, and
- Change of jurisdiction.

(N)

RECEIVED
JUN 11 2009
STATE OF ALASKA
REGULATORY COMMISSION OF ALASKA

12. Public Packet Data Network (Cont'd)

12.1.3 Ethernet Transport Service (Cont'd) (N)

D. Rate Regulations (Cont'd)

2. Types of Rates and Charges (Cont'd)

b. Nonrecurring Charges (Cont'd)

3. Moves

A move involves a change in the physical location of one of the following:

- The Point of Termination at the customer's premises
- The customer's premises

The charges for moving ETS elements are dependent on whether the move is to a different location within the same building, to a different building within the same SWC, or to a different building in a different SWC. The charges specified below apply in addition to any applicable charges for moving any applicable Special Access Services as specified in Section 7, preceding.

a. Moves within the Same Building

ETS Basic and Interconnection Ports, ETS EVCs and ETS E-EVCs are not impacted when an ETS customer moves its Point of Termination to a different location within the same building. The charge for moving an ETS CT within the same building will be an amount equal to one half of the nonrecurring (i.e., installation) charge for the ETS CT. There will be no change in the minimum period requirements. (N)

RECEIVED
JUN 11 2009
STATE OF ALASKA
REGULATORY COMMISSION OF ALASKA

ACCESS SERVICES

12. Public Packet Data Network (Cont'd)

12.1.3 Ethernet Transport Service (Cont'd) (N)

D. Rate Regulations (Cont'd)

2. Types of Rates and Charges (Cont'd)

b. Nonrecurring Charges (Cont'd)

3. Moves (Cont'd)

aa. Moves to a Different Building Within the Same SWC

ETS Basic and Interconnection Ports, ETS EVCs and ETS E-EVCs are not impacted when an ETS customer moves its Point of Termination to a different building within the same SWC. The move of an ETS CT will be treated as a discontinuance and start of service. Associated nonrecurring (i.e., installation) charges will apply. New minimum period requirements will be established for the new services. The ETS customer will also remain responsible for satisfying all outstanding minimum period charges for the discontinued service.

aaa. Moves to a Different Building in a different SWC

A move to a different building in a different SWC will be treated as a discontinuance and start of service of all associated ETS elements. Associated nonrecurring (i.e., installation) charges will apply. New minimum period requirements will be established for the new services. The ETS customer will also remain responsible for satisfying all outstanding minimum period charges for the discontinued service. (N)

RECEIVED

JAN 19 2011

STATE OF ALASKA
REGULATORY COMMISSION OF ALASKA

ACCESS SERVICES

12. Public Packet Data Network (Cont'd)

12.1.3 Ethernet Transport Service (Cont'd)

D. Rate Regulations (Cont'd)

2. Types of Rates and Charges (Cont'd)

b. Nonrecurring Charges (Cont'd)

4. ETS Design Changes

As described in D.2.b.2 preceding, the ETS Design Change Charge specified in Section 14, following, will apply when the ETS customer elects to:

1. change the bandwidth capacity of existing ETS EVCs and/or ETS E-EVCs;

2. remove existing ETS EVCs or ETS E-EVCs.

When applicable, the ETS Design Change Charge applies in lieu of the ETS EVC and/or ETS E-EVC nonrecurring charge. The Access Order Charge will not apply when the ETS Design Change Charge is applicable.

3. Minimum Periods

The minimum period for ETS service elements provided to an ETS customer and for which charges are applicable is:

- Twelve months for ETS Basic Ports, ETS Interconnection Ports, ETS Channel Terminations and (C)
- One month for all other ETS elements.

RECEIVED
JUN 11 2009
STATE OF ALASKA
REGULATORY COMMISSION OF ALASKA

ACCESS SERVICES

12. Public Packet Data Network (Cont'd)

12.1.3 Ethernet Transport Service (Cont'd) (N)

E. ETS Term Discount Plan

An optional term discount plan is available for Ethernet Transport Service (ETS). Under the ETS Term Discount Plan, the monthly rates for eligible ETS service elements are reduced by a fixed percentage. The amount of the discount percentage differs based on the length of the term commitment period selected by the ETS customer.

ETS may be ordered at the customer's option on a month-to-month basis or, under a single term commitment period of either 36 months or 60 months. The customer must notify the Telephone Company in writing of the length of its selected term commitment period. For purposes of this plan, all ETS Basic and ETS Interconnection Ports included in a customer's ETS Term Discount Plan are referred to as committed ETS Ports. To be included in an ETS Term Discount Plan, all committed ETS Ports must be ordered for the same term commitment period (i.e., all 36 months or all 60 months) and remain in-service at the same bandwidth capacity throughout the entire term commitment period. ETS Ports installed after the establishment of the customer's ETS Term Discount Plan may be ordered on a month-to-month basis or added as additional committed ETS Ports to a customer's existing term commitment period as described in Section 12.1.3.E.1, following.

Access Order Charges as described in Section 5, preceding, do not apply to establish a new or make any changes to an existing ETS Term Discount Plan.

The monthly rates for ETS service elements are set forth in Section 14, following. The term discount percentages for the ETS Term Discount Plan are set forth in Section 14, following. The ETS Term Discount Plan is only available from those Telephone Companies offering the service as specified in Section 14, following. (N)

RECEIVED
JUL 2 2 2009
STATE OF ALASKA
REGULATORY COMMISSION OF ALASKA

12. Public Packet Data Network (Cont'd)

12.1.3 Ethernet Transport Service (Cont'd) (N)

E. ETS Term Discount Plan (Cont'd)

The term discount percentage for the customer's selected term commitment period applies to all committed ETS Ports provided within the Telephone Company's operating territory. The term discount percentage also applies to the following eligible ETS elements when these elements are provided within the Telephone Company's operating territory and associated with a committed ETS Port: 1) ETS channel Terminations (ETS CTs); 2) ETS Ethernet Virtual Connections (ETS EVCs); and 3) ETS Extended Ethernet Virtual Connections (ETS E-EVCs). Since there are no bandwidth or in-service requirements for ETS CTs, ETS EVCs, and ETS E-EVCs associated with committed ETS Ports under the ETS Term Discount Plan, customer ordered disconnects of or changes to the number or bandwidth capacities for these elements do not affect the customer's ETS Term Discount Plan.

The term discount percentage does not apply to: 1) ETS Ports ordered on a month-to-month basis; 2) ETS CTs, ETS EVCs, and ETS E-EVCs that are not associated with a committed ETS Port; 3) ETS nonrecurring charges; and 4) special access services connected to an ETS Interconnection Port.

Except as specified in 1 – 3 following, discontinuance charges will apply when the customer fails to satisfy the term commitment period or the in-service requirements for its committed ETS Ports.

The term discount percentage set forth in Section 14, following, will not be subject to Telephone Company initiated decreases during the customer's selected term commitment period.

If a term discount percentage increase occurs during the term of an existing ETS Term Discount Plan, the increased percentage will be applied automatically for the remainder of the customer's existing term commitment period. (N)

RECEIVED
JUN 1 1 2009
STATE OF ALASKA
REGULATORY COMMISSION OF ALASKA

ACCESS SERVICES

12. Public Packet Data Network (Cont'd)

12.1.3 Ethernet Transport Service (Cont'd) (N)

E. ETS Term Discount Plan (Cont'd)

At the end of the term commitment period, the customer may subscribe to a new ETS Term Discount Plan commitment period or revert to month-to-month rates. If the customer does not notify the Telephone Company in writing of its choice by the end of its existing term commitment period, the Telephone Company will automatically convert the customer's ETS billing to month-to-month rates. An Access Order Charge will not apply when a customer at the end of its existing term commitment period subscribes to a replacement ETS Term Discount Plan or reverts to month-to-month rates.

1. ETS Port Additions

An ETS Term Discount Plan customer will choose one of the following options when ordering a new ETS Port during its existing term commitment period:

a) Add the new ETS Port to its existing ETS Term Discount Plan provided: a) the customer commits to retain the newly installed ETS Port in-service at the same bandwidth capacity for the remainder of the existing term commitment period and b) the ETS Port is being added before the last year of an existing term commitment period. The term commitment period of the customer's existing ETS Term Discount Plan will continue uninterrupted. During the last year of the commitment period, ETS Ports may not be added to an existing term commitment period.

b) Order the new ETS Port on a month-to-month basis. No term discount percentage would apply to the newly installed ETS Port. The term commitment period of the customer's existing ETS Term Discount Plan will continue uninterrupted.

c) Replace the existing ETS Term Discount Plan in its entirety with a new ETS Term Discount Plan as described in E.3, following. (N)

RECEIVED
JUN 11 2009
STATE OF ALASKA
REGUL. COMM. COMMISSION OF ALASKA

12. Public Packet Data Network (Cont'd)

12.1.3 Ethernet Transport Service (Cont'd) (N)

E. ETS Term Discount Plan (Cont'd)

2. Committed ETS Port Replacements

a. An ETS Term Discount Plan customer may disconnect a committed ETS Port before the end of its existing term commitment period and replace it with one or more newly installed committed ETS Port(s) without the application of a discontinuance charge as described in 4, following, provided: a) the bandwidth capacity of the replacement committed ETS Port(s) is equal to or greater than the bandwidth capacity of the disconnected committed ETS Port; b) the customer commits to retain the replacement committed ETS Port(s) in-service at the same bandwidth capacity for the remainder of the existing term commitment period; c) the replacement committed ETS Port(s) is added to the existing term commitment before the last year of an existing term commitment period; and d) the customer's orders for the disconnect of the originally committed ETS Port and installation of the replacement committed ETS Port(s) are submitted to the Telephone Company at the same time and include cross references as described in Section 5.2, preceding.

b. If the bandwidth capacity of the newly installed committed ETS Port(s) is less than the bandwidth capacity of the disconnected committed ETS Port, the disconnected committed ETS Port will be subject to a discontinuance charge as described in 4, following. The newly installed port(s) can be added as a committed ETS Port to the existing term commitment period or ordered on a month-to-month basis as described in 1, preceding.

c. Since newly installed ETS Ports cannot be added to an existing term commitment period during the last year of the commitment period, an existing committed ETS Port disconnected during the last year of the commitment period cannot be replaced as described in 2.a, above. The disconnected committed ETS Port will be subject to a discontinuance charge as described in 4, following. During the last year of the term commitment period, newly installed ETS Ports can be ordered as described in 1, preceding. (N)

RECEIVED
JUN 1 1 2009
STATE OF ALASKA
REGULATORY COMMISSION OF ALASKA

ACCESS SERVICES

12. Public Packet Data Network (Cont'd)

12.1.3 Ethernet Transport Service (Cont'd) (N)

E. ETS Term Discount Plan (Cont'd)

3. ETS Term Discount Plan Replacements

a. The customer may replace an existing ETS Term Discount Plan in its entirety with a new ETS Term Discount Plan without the application of a discontinuance charge as described in 4, following, provided: a) the term commitment period of the new ETS Term Discount Plan meets or exceeds the number of months remaining in the customer's existing ETS term commitment period and b) the bandwidth capacity of the committed ETS Ports under the new ETS Term Discount Plan meets or exceeds the bandwidth capacity of the committed ETS Ports in the customer's existing ETS term commitment period. The term discount percentage applicable for the replacement ETS Term Discount Plan will apply on a going forward basis based on the customer's written request to establish a new ETS Term Discount Plan commitment period under this provision.

For example, a customer with an existing 36 month term commitment period and 50 Mbps of bandwidth capacity for its committed ETS Ports can replace that term commitment in its entirety with a new 36 month or 60 month term commitment period at any time during the existing term commitment period without the application of a discontinuance charge provided the bandwidth capacity of the customer's committed ETS Ports under the new term commitment period is at least 50 Mbps.

b. When the term commitment period of a replacement ETS Term Discount Plan does not meet or exceed the number of months remaining in the customer's existing ETS Term Discount Plan commitment period, a discontinuance charge as described in 4, following, will apply. (N)

RECEIVED
JUN 1 1 2009
STATE OF ALASKA
REGULATORY COMMISSION OF ALASKA

ACCESS SERVICES

12. Public Packet Data Network (Cont'd)

12.1.3 Ethernet Transport Service (Cont'd) (N)

E. ETS Term Discount Plan (Cont'd)

3. ETS Term Discount Plan Replacements (Cont'd)

c. When the term commitment period of the new ETS Term Discount Plan meets or exceeds the number of months remaining in the customer's existing ETS term commitment period, but the bandwidth capacity of the customer's committed ETS Ports under the new term commitment period is less than the bandwidth capacity of the committed ETS Ports under the customer's existing term commitment period, the following provisions will apply.

1. When the total monthly undiscounted charges for the number and type of committed ETS Ports to be included in the customer's replacement ETS Term Discount Plan is equal to or greater than the total monthly undiscounted charges for the number and type of committed ETS Ports included in the customer's existing ETS Term Discount Plan, the customer will be permitted to replace its existing ETS Term Discount Plan without the application of either a discontinuance charge as described in 4, following, or a commitment shortfall charge as described in 3.c.2, below.

2. When the total monthly undiscounted charges for the number and type of committed ETS Ports to be included in the customer's replacement ETS Term Discount Plan is less than the total monthly undiscounted charges for the number and type of committed ETS ports included in the customer's existing ETS Term Discount Plan, the customer will be permitted to replace its existing ETS Term Discount Plan under this provision, however, a commitment shortfall charge will apply. The commitment shortfall charge will apply in lieu of a discontinuance charge as described in 4, following, and will be calculated as follows: (N)

RECEIVED
JUN 1 1 2009
STATE OF ALASKA
REGULATORY COMMISSION OF ALASKA

ACCESS SERVICES

12. Public Packet Data Network (Cont'd)

12.1.3 Ethernet Transport Service (Cont'd) (N)

E. ETS Term Discount Plan (Cont'd)

3. ETS Term Discount Plan Replacements (Cont'd)

Step 1: Determine the difference between the total monthly undiscounted charges for the number and type of committed ETS Ports included in the customer's existing ETS Term Discount Plan and the total monthly undiscounted charges for the number and type of committed ETS Ports to be included in the customer's replacement ETS Term Discount Plan.

Step 2: Multiply the result from Step 1 by 35%.

Step 3: Multiply the result from Step 2 times the number of months remaining in the existing term commitment period.

For example, a customer elects to replace its existing 36 month ETS Term Discount Plan in its entirety in the 22nd month of the existing term commitment period with a new 36 month ETS Term Discount Plan. The existing term plan commitment includes a total bandwidth capacity requirement of 300 Mbps for the customer's six 50 Mbps committed ETS Basic Ports. In the replacement ETS Term Discount Plan, the customer will only be including two 100 Mbps committed ETS Basic Ports for a total bandwidth capacity of 200 Mbps. Although the customer satisfies the term commitment length replacement requirement with the new ETS Term Discount Plan, it does not satisfy the bandwidth capacity replacement requirement and the total monthly undiscounted charges under the new term commitment period are less than the total monthly undiscounted charges under the existing term commitment period.

Using illustrative undiscounted monthly rates of $275.00 for a 50 Mbps ETS Basic Port and $330.00 for a 100 Mbps ETS Basic Port, the Telephone Company would bill the customer a commitment shortfall charge totaling $4,851.00 based on:

Step 1: $1,650.00 (i.e., $275.00 x 6 ports) - $660.00 (i.e., $330.00 x 2 ports) = $990.00

Step 2: $990.00 x 35% = $346.50

Step 3: $346.50 x 14 months = $4,851.00 (N)

RECEIVED
JUN 1 1 2009
STATE OF ALASKA
REGULATORY COMMISSION OF ALASKA

ACCESS SERVICES

12. Public Packet Data Network (Cont'd)

12.1.3 Ethernet Transport Service (Cont'd) (N)

E. ETS Term Discount Plan (Cont'd)

4. Discontinuance Charges

Except as provided for in 2 and 3, preceding, discontinuance charges will apply when:

a. the customer disconnects a committed ETS Port prior to the end of the term commitment period;

b. the customer disconnects a committed ETS Port prior to the end of the term commitment period and the replacement committed ETS Ports(s) does not satisfy the requirements specified in 2, preceding;

c. the customer discontinues an existing ETS Term Discount Plan in its entirety prior to the end of the term commitment period; or

d. the customer replaces an existing ETS Term Discount Plan with a new ETS Term Discount Plan that does not satisfy the requirements specified in 3, preceding.

The discontinuance charge will be equal to 35% of the total undiscounted monthly rate for each committed ETS Port included in the customer's ETS Term Discount Plan for each month remaining in the unsatisfied term commitment period. Minimum service period charges as specified in Section XX, preceding, would also apply, if applicable.

The following examples illustrate how the Telephone Company will calculate the applicable discontinuance charge.

Example 1

A customer discontinues its existing ETS Term Discount Plan in its entirety in the 20th month of a 36 month term commitment period. The customer included three 100 Mbps committed ETS Basic Ports when it established its initial term plan commitment.

Using an illustrative undiscounted monthly rate of $330.00 for a 100 Mbps ETS Basic Port, the Telephone Company would bill the customer a term plan discontinuance charge totaling $5,544.00 (i.e., $330.00 x 35% x 3 ports x 16 months). (N)

RECEIVED
JUN 11 2009
STATE OF ALASKA
REGULATORY COMMISSION OF ALASKA

12. Public Packet Data Network (Cont'd)

12.1.3 Ethernet Transport Service (Cont'd) (N)

E. ETS Term Discount Plan (Cont'd)

4. Discontinuance Charges (Cont'd)

Example 2

A customer disconnects one of the four 50 Mbps committed ETS Basic Ports included in its ETS Term Discount Plan in the 39th month of a 60 month term commitment period. The customer included all four of these ports when it established its initial term plan commitment.

Using an illustrative undiscounted monthly rate of $275.00 for a 50 Mbps ETS Basic Port, the Telephone Company would bill the customer a port discontinuance charge totaling $2,021.25 (i.e., $275.00 x 35% x 21 months). (N)

RECEIVED
JUN 21 2021
STATE OF ALASKA
REGULATORY COMMISSION OF ALASKA

ACCESS SERVICES

Index to Rates and Charges

13.1 Carrier Common Line Access Service

13.1.1 Reserved for Future Use

13.1.2 Recurring Charge

13.1.2.a Essential Network Support 278

13.1.2.b Network Access Fee 278.1

13.2 Switched Access Service

13.2.1 Nonrecurring Charges

A. Access Order 279
B. Service Date Change Charge 279.0.1
C. Design Change Charge 279.0.2
D. Miscellaneous Service Order Charge 279.0.3
E. Transport – Installation Per Entrance Facility 279.0.4
F. Transport – Trunk Activation Per Order 279.0.4.1
G. Interim NXX Translation 279.0.5
H. Telecommunications Service Priority Charge 279.0.5

13.2.2 Recurring Charges

A. Entrance Facility 279.0.6 (T)
B. Direct Trunked Transport 279.0.7
C. Multiplexing 279.0.8
D. Common Transport 279.0.8
E. Tandem Switched Transport 279.0.8
F. Local Switching 279.0.9
G. Information Surcharge 279.0.9
H. Toll Free Data Base Access Service Query Charge 279.1 (T)

13.2.3 Equal Access Recovery Charge 279.2

13.2.4 Presubscription Change Charge 279.3

13.2.5 Assumed Minutes Of Use 280

RECEIVED

MAY 17 2013

STATE OF ALASKA
REGULATORY COMMISSION OF ALASKA

ACCESS SERVICES

Index To Rates And Charges - (Cont'd)

13.3 Special Access Service (L)

13.3.1a Surcharge For Special Access Service 281

13.3.1b Telecommunications Service Priority Charge 281.1

13.3.1c Special Access Ordering
- A. Access Order Charge 281.2
- B. Service Date Change Charge 281.3
- C. Design Change Charge 281.4
- D. Misc. Service Order Charge 281.5

13.3.2 Billing for Special Access Service 282 (L)

13.3.3 Voice Grade Service
- A. Channel Termination 283
- B. Channel Mileage
  - 1. Channel Mileage Facility 283.2
  - 2. Channel Mileage Termination 283.3
- C. Optional Features And Functions
  - 1. Bridging
    - a. Voice Bridging 284
    - b. Data Bridging 284.2
    - c. Telephoto Bridging 284.3
    - d. Dataphone Select-A-Station
      - Sequential Arrangement 284.4
      - Addressable Arrangement 284.5
    - e. Telemetry & Alarm Bridging
      - Active Bridging, Channel Connections 284.6
      - Passive Bridging, Channel Connections 284.7
  - 2. Conditioning Per Termination
    - a. C Type 285
    - b. Improved Attenuation Distortion 285.1
    - c. Improved Envelope Delay Distortion 285.2
    - d. Data Capability 285.3
    - e. Telephoto Capability 285.4
    - f. Telephoto Capability (VG11 & VGC) 285.5
    - g. Sealing Current 285.6

(L) Text relocated from Sheet 277

RECEIVED

MAY 1 7 2013

STATE OF ALASKA
REGULATORY COMMISSION OF ALASKA

ACCESS SERVICES

Index To Rates And Charges - (Cont'd)

13.3 Special Access Service – (Cont'd)

13.3.3 Voice Grade Service - (Cont'd)

3.	Improved Return Loss For Effective Two-Wire To Four-Wire Transmission	286	(L)
4.	Customer-Specified Receive Level	286.2	
5.	Multiplexing, Per Arrangement Voice Grade To Telegraph Grade	286.3	(L)
6.	Signaling Capability	286	
7.	Selective Signaling Arrangement	287	
8.	Transfer Arrangement-Key Activated Or Dial Up	288	
9.	Public Packet Switching Network (PPSN)	288.2	

(L) Text relocated from Sheet 277.1

RECEIVED
JUN 19 1996
State of Alaska
Public Utilities Commission

TELEPHONE EXCHANGE CARRIERS OF ALASKA

ACCESS SERVICES

INDEX TO RATES AND CHARGES - (Cont'd)

13.3 **SPECIAL ACCESS SERVICE** - Continued

13.3.3 **DIGITAL DATA SERVICE**

(A) **CHANNEL TERMINATION, PER TERMINATION**

2.4 Kbps	289	
4.8 Kbps	289.1	
9.6 Kbps	289.2	
19.2 Kbps	289.2.1	(N)
56.0 Kbps	289.3	
64.0 Kbps	289.3.1	(N)

(B) **CHANNEL MILEAGE**

(1) **CHANNEL MILEAGE FACILITY, PER MILE**

2.4 Kbps	289.4	
4.8 Kbps	289.5	
9.6 Kbps	289.6	
19.2 Kbps	289.6.1	(N)
56.0 Kbps	289.7	
64.0 Kbps	289.7.1	(N)

(2) **CHANNEL MILEAGE TERMINATION, PER TERMINATION**

2.4 Kbps	289.8	
4.8 Kbps	289.9	
9.6 Kbps	289.10	
19.2 Kbps	289.10.1	(N)
56.0 Kbps	289.11	
64.0 Kbps	289.11.1	(N)

(L)
|
(L)

(L) Text relocated to Second Revised Sheet No. 277.4.

Tariff Advice No. 31 Effective: July 29, 1996

Issued: _____
Issued By: Alaska Exchange Carriers Association, Inc.
By: Ruth A. Steele Title: President

RECEIVED
JUN 19 1996
State of Alaska
Public Utilities Commission

TELEPHONE EXCHANGE CARRIERS OF ALASKA

ACCESS SERVICES

INDEX TO RATES AND CHARGES - (Cont'd)

13.3 **SPECIAL ACCESS SERVICE** - Continued

13.3.3 **DIGITAL DATA SERVICE** (Cont'd) (L)

(C) **OPTIONAL FEATURES AND FUNCTIONS**

(1) **BRIDGING, PER PORT**	290	
(2) **LOOP TRANSFER ARRANGEMENT**	290.1	(C)
(3) **PUBLIC PACKET SWITCHING NETWORK INTERFACE ARRANGEMENT**		
9.6 Kbps	290.2	
56.0 Kbps	290.3	

(D) **CHANNEL SERVICE UNIT PER TERMINATION**

2.4 Kbps	291
4.8 Kbps	291.1
9.6 Kbps	291.2
56.0 Kbps	291.3 (L)

13.3.4 **HIGH CAPACITY SERVICE**

(A) **CHANNEL TERMINATION PER TERMINATION**

1.544 Mbps	292.1
3.152 Mbps	292.2
6.312 Mbps	292.3
44.736 Mbps	292.4
274.176 Mbps	292.5

(B) **CHANNEL MILEAGE**

(1) FACILITY PER MILE

64.0 Kbps	292.6
1.544 Mbps	292.7
3.152 Mbps	292.8
6.312 Mbps	292.9
44.736 Mbps	292.10
274.176 Mbps	292.11

(2) PER TERMINATION

64.0 Kbps	292.12
1.544 Mbps	292.13
3.152 Mbps	292.14
6.312 Mbps	292.15
44.736 Mbps	292.16
274.176 Mbps	292.17

(L) Text relocated from Second Revised Sheet No. 277.3.

Tariff Advice No. 31 Effective: July 29, 1996

Issued:
Issued By: Alaska Exchange Carriers Association, Inc.
By: Ruth A. Stroh Title: President

RECEIVED

DEC 1 6 2003

State of Alaska
Regulatory Commission of Alaska

ACCESS SERVICES

Index To Rates And Charges - (Cont'd)

13.3 Special Access Service - Continued

13.3.4 High Capacity Service - Continued

C. Optional Features And Functions

1. Multiplexing -

DS4 to DS1	293	
DS3 to DS1	293.1	
DS2 to DS1	293.2	
D1C to DS1	293.3	
DS1 to VOICE	293.4	
DS1 to DS0	293.5	
DS0 to Subrate - Up to 20 2.4 Kbps	293.6	
DS0 to Subrate - Up to 10 4.8 Kbps	293.7	(T)
DS0 to Subrate - Up to 5 9.6 Kbps	293.8	
2. Automatic Loop Transfer	294	
3. Transfer Arrangement	294.1	(T)
D. Network Channel Terminating Equipment (NCTE)		(T)
1.544 Mbps	295	
Automatic Loop Transfer	295.1	
13.4 Other Services		
13.4.1 Public Packet Data Network	296	

RECEIVED
JAN 13 1994
State of Alaska
Public Utilities Commission

TELEPHONE EXCHANGE CARRIERS OF ALASKA

ACCESS SERVICES

INDEX TO RATES AND CHARGES - (Cont'd)

13.5 **ADDITIONAL ENGINEERING, ADDITIONAL LABOR AND MISCELLANEOUS SERVICE**

13.5.1 **ADDITIONAL ENGINEERING**

(A) Basic Time 308
(B) Overtime 308.1 (T)
(C) Premium Time 308.2

13.5.2 **ADDITIONAL LABOR**

(A) **INSTALLATION AND REPAIR**
(1) Overtime 309
(2) Premium Time 309.1
(B) **STANDBY**
(1) Basic Time 309.2
(2) Overtime 309.3
(3) Premium Time 309.4
(C) **TESTING AND MAINTENANCE WITH OTHER TELEPHONE COMPANIES OR OTHER LABOR**
(1) Installation and Repair
Basic Time 310
Overtime 310.1
Premium Time 310.2
(2) Central Office Maintenance
Basic Time 310.3
Overtime 310.4
Premium Time 310.5

13.5.3 **MISCELLANEOUS SERVICES**
(A) **ADDITIONAL COOPERATIVE ACCEPTANCE TESTING -SWITCHED ACCESS**
(1) Testing Periods 311
(B) **ADDITIONAL AUTOMATIC TESTING - SWITCHED ACCESS TO FIRST POINT OF SWITCHING** 311.1
(C) **ADDITIONAL MANUAL TESTING - SWITCHED ACCESS TO FIRST POINT OF SWITCHING** 312
(D) **ADDITIONAL COOPERATIVE ACCEPTANCE TESTING -SPECIAL ACCESS** 312.1
(E) **ADDITIONAL MANUAL TESTING - SPECIAL ACCESS** 313
(F) **MAINTENANCE OF SERVICE** 313.1

RECEIVED
MAY 11 2026
STATE OF ALASKA
REGULATORY COMMISSION OF ALASKA

ACCESS SERVICE

13. Rates and Charges

13.1 Carrier Common Line Access Service

13.1.1 Reserved for Future use

13.1.2 Recurring Charge

13.1.2.a Recurring Charge – Essential Network Support

	Essential Network Support Monthly Rate	
AECA	$232,264	(I)

Regulations concerning Essential Network Support are set forth in Section 3 preceding.

This charge is billed to AUSAC as described in 2.4.1(B).1 preceding.

RECEIVED

DEC 14 2018

STATE OF ALASKA
REGULATORY COMMISSION OF ALASKA

ACCESS SERVICE

13. Rates and Charges (Cont'd) (T)

13.1 Carrier Common Line Access Service (Cont'd) (T)

13.1.1 Reserved For Future Use (D)

13.1.2 Recurring Charge (Cont'd) (N)

13.1.2.b Recurring Charge – Network Access Fee (NAF) (T)

This charge is applied to the end user for intrastate access as described in Section 4.1

COMPANY	Monthly Rate
ADAK (AEE)	$5.75
ATC	5.75
BETTLES	5.75
BBTC	5.75
BUSH	5.75
CIRCLE	5.75
NO. COUNTRY	5.75
NETCI	5.75
OTZ	5.75
SUMMIT	5.75
UKUC	5.75
UUI	5.75
YTC	5.75

RECEIVED
JUN 22 2026
STATE OF ALASKA
REGULATORY COMMISSION OF ALASKA

13. Rates and Charges (Cont'd)

13.2 Switched Access Service

47 CFR 51.909 required Transitional Intrastate Access Service rates be subject to the same rates and rate structure as functionally equivalent interstate rates.

13.2.1 Nonrecurring Charges

A. Access Order

Reference AECA Tariff Section 5.2

COMPANY	Rate	
ADAK (AEE)	$140.00	(I)
ATC*	$101.00	
BETTLES	$140.00	(I)
BBTC	$140.00	(I)
BUSH	$140.00	(I)
CIRCLE	$140.00	(I)
NO. COUNTRY	$140.00	(I)
NETCI	$140.00	(I)
OTZ	$140.00	(I)
SUMMIT	$140.00	(I)
UKUC**	$86.00	
UUI**	$86.00	
YTC**	$86.00	

Current National Exchange Carrier Association, Inc. Tariff F.C.C. No. 5 Rates Apply

*Current JSI Tariff F.C.C. No. 1 Rates Apply for Alaska Telephone Company
**Current Moss Adams LLP Tariff F.C.C. No. 1 Rates Apply for United Utilities, Inc., United-KUC, Inc. and Yukon Telephone Company

RECEIVED
JUN 22 2026
STATE OF ALASKA
REGULATORY COMMISSION OF ALASKA

ACCESS SERVICE

13. Rates and Charges (Cont'd)

13.2 Switched Access Service (Cont'd)

47 CFR 51.909 required Transitional Intrastate Access Service rates be subject to the same rates and rate structure as functionally equivalent interstate rates.

13.2.1 Nonrecurring Charges (Cont'd)

B. Service Date Change Charge

Reference AECA Tariff Section 5.7

COMPANY	Rate	
ADAK (AEE)	$98.00	(I)
ATC*	$70.00	
BETTLES	$98.00	(I)
BBTC	$98.00	(I)
BUSH	$98.00	(I)
CIRCLE	$98.00	(I)
NO.COUNTRY	$98.00	(I)
NETCI	$98.00	(I)
OTZ	$98.00	(I)
SUMMIT	$98.00	(I)
UKUC**	$59.78	
UUI**	$59.78	
YTC**	$20.88	

Current National Exchange Carrier Association, Inc. Tariff F.C.C. No. 5 Rates Apply

*Current JSI Tariff F.C.C. No. 1 Rates Apply for Alaska Telephone Company
**Current Moss Adams LLP Tariff F.C.C. No. 1 Rates Apply for United Utilities, Inc., United-KUC, Inc. and Yukon Telephone Company

Issued: _____
Issued By: Alaska Exchange Carriers Association, Inc
By: Keegan Bernier Title: Executive Director

RECEIVED
JUN 22 2026
STATE OF ALASKA
REGULATORY COMMISSION OF ALASKA

ACCESS SERVICE

13. Rates and Charges (Cont'd)

13.2 Switched Access Service (Cont'd)

47 CFR 51.909 required Transitional Intrastate Access Service rates be subject to the same rates and rate structure as functionally equivalent interstate rates.

13.2.1 Nonrecurring Charges (Cont'd)

C. Design Change Charge

Reference AECA Tariff Section 5.7

COMPANY	Rate	
ADAK (AEE)	$137.00	(I)
ATC*	$98.10	
BETTLES	$137.00	(I)
BBTC	$137.00	(I)
BUSH	$137.00	(I)
CIRCLE	$137.00	(I)
NO.COUNTRY	$137.00	(I)
NETCI	$137.00	(I)
OTZ	$137.00	(I)
SUMMIT	$137.00	(I)
UKUC**	$83.69	
UUI**	$83.69	
YTC**	$29.24	

Current National Exchange Carrier Association, Inc. Tariff F.C.C. No. 5 Rates Apply

*Current JSI Tariff F.C.C. No. 1 Rates Apply for Alaska Telephone Company
**Current Moss Adams LLP Tariff F.C.C. No. 1 Rates Apply for United Utilities, Inc., United-KUC, Inc. and Yukon Telephone Company

Issued: _____
Issued By: Alaska Exchange Carriers Association, Inc
By: Keegan Bernier Title: Executive Director

RECEIVED
JUN 22 2026
STATE OF ALASKA
REGULATORY COMMISSION OF ALASKA

ACCESS SERVICE

13. Rates and Charges (Cont'd)

13.2 Switched Access Service (Cont'd)

47 CFR 51.909 required Transitional Intrastate Access Service rates be subject to the same rates and rate structure as functionally equivalent interstate rates.

13.2.1 Nonrecurring Charges (Cont'd)

D. Miscellaneous Service Order Charge

Reference AECA Tariff Section 5.7

COMPANY	Rate	
ADAK (AEE)	$200.00	(I)
ATC*	$144.00	
BETTLES	$200.00	(I)
BBTC	$200.00	(I)
BUSH	$200.00	(I)
CIRCLE	$200.00	(I)
NO.COUNTRY	$200.00	(I)
NETCI	$200.00	(I)
OTZ	$200.00	(I)
SUMMIT	$200.00	(I)
UKUC**	$122.55	
UUI**	$122.55	
YTC**	$42.81	

Current National Exchange Carrier Association, Inc. Tariff F.C.C. No. 5 Rates Apply

*Current JSI Tariff F.C.C. No. 1 Rates Apply for Alaska Telephone Company
**Current Moss Adams LLP Tariff F.C.C. No. 1 Rates Apply for United Utilities, Inc., United-KUC, Inc. and Yukon Telephone Company

Issued: _____
Issued By: Alaska Exchange Carriers Association, Inc
By: Keegan Bernier Title: Executive Director

RECEIVED
JUN 22 2026
STATE OF ALASKA
REGULATORY COMMISSION OF ALASKA

ACCESS SERVICE

13. Rates and Charges (Cont'd)

13.2 Switched Access Service (Cont'd)

47 CFR 51.909 required Transitional Intrastate Access Service rates be subject to the same rates and rate structure as functionally equivalent interstate rates.

13.2.1 Nonrecurring Charges (Cont'd)

E. Transport – Installation per Entrance Facility

Reference AECA Tariff Section 6.8

COMPANY	Voice Grade Two Wire	Voice Grade Four Wire	High Capacity DS1	High Capacity DS3	Sychronous Optical Channel OC3	Sychronous Optical Channel OC12
	Rate	Rate	Rate	Rate	Rate	Rate
ADAK (AEE)	N/A	N/A	$298.08 (R)	N/A	N/A	N/A
ATC*	$501.26	$501.26	$367.61	$495.69	$401.01	$401.01
BETTLES	$406.46 (R)	$406.46 (R)	$298.08 (R)	$401.93 (R)	$325.16 (R)	$325.16 (R)
BBTC	N/A	N/A	$298.08 (R)	N/A	N/A	N/A
BUSH	$406.46 (R)	$406.46 (R)	$298.08 (R)	$401.93 (R)	N/A	N/A
CIRCLE	N/A	$406.46 (R)	N/A	N/A	N/A	N/A
NO.COUNTRY	$406.46 (R)	$406.46 (R)	$298.08 (R)	$401.93 (R)	$325.16 (R)	$325.16 (R)
NETCI	$406.46 (R)	$406.46 (R)	$298.08 (R)	$401.93 (R)	$325.16 (R)	$325.16 (R)
OTZ	$406.46 (R)	$406.46 (R)	$298.08 (R)	N/A	N/A	N/A
SUMMIT	$406.46 (R)	$406.46 (R)	$298.08 (R)	$401.93 (R)	N/A	N/A
UKUC**	$1,216.38	$1,216.38	$892.00	$1,202.85	$973.08	N/A
UUI**	$1,216.38	$1,216.38	$892.00	$1,202.85	N/A	N/A
YTC**	$488.17	$488.17	$358.01	N/A	N/A	N/A

Current National Exchange Carrier Association, Inc. Tariff F.C.C. No. 5 Rates Apply

*Current JSI Tariff F.C.C. No. 1 Rates Apply for Alaska Telephone Company
**Current Moss Adams LLP Tariff F.C.C. No. 1 Rates Apply for United Utilities, Inc., United-KUC, Inc. and Yukon Telephone Company

Issued: _____
Issued By: Alaska Exchange Carriers Association, Inc
By: Keegan Bernier Title: Executive Director

RECEIVED
JUN 22 2026
STATE OF ALASKA
REGULATORY COMMISSION OF ALASKA

ACCESS SERVICE

13. Rates and Charges (Cont'd)

13.2 Switched Access Service (Cont'd)

47 CFR 51.909 required Transitional Intrastate Access Service rates be subject to the same rates and rate structure as functionally equivalent interstate rates.

13.2.1 Nonrecurring Charges (Cont'd)

F. Transport – Trunk Activation Per Order

Reference AECA Tariff 6.8

COMPANY	Rate	
ADAK (AEE)	$414.58	(R)
ATC*	$511.28	
BETTLES	$414.58	(R)
BBTC	$414.58	(R)
BUSH	$414.58	(R)
CIRCLE	$414.58	(R)
NO.COUNTRY	$414.58	(R)
NETCI	$414.58	(R)
OTZ	$414.58	(R)
SUMMIT	$414.58	(R)
UKUC**	$1,240.68	
UUI**	$1,240.68	
YTC**	$497.93	

Current National Exchange Carrier Association, Inc. Tariff F.C.C. No. 5 Rates Apply

*Current JSI Tariff F.C.C. No. 1 Rates Apply for Alaska Telephone Company
**Current Moss Adams LLP Tariff F.C.C. No. 1 Rates Apply for United Utilities, Inc., United-KUC, Inc. and Yukon Telephone Company

Issued: _____
Issued By: Alaska Exchange Carriers Association, Inc
By: Keegan Bernier Title: Executive Director

RECEIVED
JUN 22 2026
STATE OF ALASKA
REGULATORY COMMISSION OF ALASKA

ACCESS SERVICE

13. Rates and Charges (Cont'd)

13.2 Switched Access Service (Cont'd)

47 CFR 51.909 required Transitional Intrastate Access Service rates be subject to the same rates and rate structure as functionally equivalent interstate rates.

13.2.1 Nonrecurring Charges (Cont'd)

G. Interim NXX Translation Per Order

Reference AECA Tariff Section 6.8

COMPANY	Rate	
ADAK (AEE)	$198.72	(R)
ATC*	$245.07	
BETTLES	$198.72	(R)
BBTC	$198.72	(R)
BUSH	$198.72	(R)
CIRCLE	$198.72	(R)
NO.COUNTRY	$198.72	(R)
NETCI	$198.72	(R)
OTZ	$198.72	(R)
SUMMIT	$198.72	(R)
UKUC**	$594.66	
UUI**	$594.66	
YTC**	$238.67	

	Rate	Reference
H. Telecommunications Service Priority		
Charge Per Circuit	$54.63	9.3

Current National Exchange Carrier Association, Inc. Tariff F.C.C. No. 5 Rates Apply

*Current JSI Tariff F.C.C. No. 1 Rates Apply for Alaska Telephone Company
**Current Moss Adams LLP Tariff F.C.C. No. 1 Rates Apply for United Utilities, Inc., United-KUC, Inc. and Yukon Telephone Company

Issued: _____
Issued By: Alaska Exchange Carriers Association, Inc
By: Keegan Bernier Title: Executive Director

RECEIVED
JUN 22 2026
STATE OF ALASKA
REGULATORY COMMISSION OF ALASKA

13. Rates and Charges (Cont'd)

13.2 Switched Access Service (Cont'd)

47 CFR 51.909 required Transitional Intrastate Access Service rates be subject to the same rates and rate structure as functionally equivalent interstate rates.

13.2.2 Recurring Charges

Reference AECA Tariff Section 6.8

A. Entrance Facility, Per Termination

COMPANY	2 Wire Voice Grade	4 Wire Voice Grade	High Capacity DS1	High Capacity DS3	Sychronous Optical Channel OC3	Sychronous Optical Channel OC12
	Rate	**Rate**	**Rate**	**Rate**	**Rate**	**Rate**
ADAK (AEE)	N/A	N/A	$193.54 (R)	N/A	N/A	N/A
ATC*	$90.22	$144.38	$439.85	$4,016.16	$4,095.27	$4,372.42
BETTLES	$35.41 (R)	$56.64 (R)	$172.60 (R)	$1,575.97(R)	$1,607.01 (R)	$1,715.77 (R)
BBTC	N/A	N/A	$172.60 (R)	N/A	N/A	N/A
BUSH	$28.42 (R)	$45.47 (R)	$138.52 (R)	$1.264.83(R)	N/A	N/A
CIRCLE	N/A	$110.19 (R)	N/A	N/A	N/A	N/A
NO.COUNTRY	$68.85 (R)	$110.19 (R)	$335.69 (R)	$3,065.07 (R)	$3,125.45 (R)	$3,336.96 (R)
NETCI	$25.40 (R)	$40.66 (R)	$123.84 (R)	$1,130.80 (R)	$1,153.12 (R)	$1,231.15 (R)
OTZ	$68.85 (R)	$110.19 (R)	$335.69 (R)	N/A	N/A	N/A
SUMMIT	$68.85 (R)	$110.19 (R)	$335.69 (R)	$3,065.07 (R)	N/A	N/A
UKUC**	$154.20	$246.76	$751.80	$6,864.47	$6,999.73	N/A
UUI**	$154.20	$246.76	$751.80	$6,864.47	N/A	N/A
YTC**	$45.60	$72.97	$222.29	N/A	N/A	N/A

Current National Exchange Carrier Association, Inc. Tariff F.C.C. No. 5 Rates Apply

*Current JSI Tariff F.C.C. No. 1 Rates Apply for Alaska Telephone Company
**Current Moss Adams LLP Tariff F.C.C. No. 1 Rates Apply for United Utilities, Inc., United-KUC, Inc. and Yukon Telephone Company

Issued: _____
Issued By: Alaska Exchange Carriers Association, Inc
By: Keegan Bernier Title: Executive Director

RECEIVED
JUN 22 2026
STATE OF ALASKA
REGULATORY COMMISSION OF ALASKA

ACCESS SERVICE

13. Rates and Charges (Cont'd)

13.2 Switched Access Service (Cont'd)

47 CFR 51.909 required Transitional Intrastate Access Service rates be subject to the same rates and rate structure as functionally equivalent interstate rates.

13.2.2 Recurring Charges (Cont'd)

B. Direct Trunked Transport

Reference AECA Tariff Section 6.2

Direct Trunked Facility, Per Mile

COMPANY	2 Wire Voice Grade	4 Wire Voice Grade	High Capacity DS1	High Capacity DS3	Sychronous Optical Channel OC3	Sychronous Optical Channel OC12
	Rate	**Rate**	**Rate**	**Rate**	**Rate**	**Rate**
ADAK (AEE)	N/A	N/A	$13.26 (R)	N/A	N/A	N/A
ATC*	$6.41	$6.41	$30.15	$262.50	$281.01	$352.71
BETTLES	$2.53 (R)	$2.53 (I)	$11.82 (R)	$103.02 (R)	$110.28 (R)	$138.39 (R)
BBTC	N/A	N/A	N/A	N/A	N/A	N/A
BUSH	$2.02 (R)	$2.02 (R)	$9.52 (R)	$82.68 (R)	N/A	N/A
CIRCLE	N/A	$4.89 (R)	N/A	N/A	N/A	N/A
NO.COUNTRY	$4.89 (R)	$4.89 (R)	$23.01 (R)	$200.34 (R)	$214.47 (R)	$219.18 (R)
NETCI	$1.80 (R)	$1.80 (R)	$8.46 (R)	$73.91 (R)	$79.11 (R)	$99.30 (R)
OTZ	$4.89 (R)	$4.89 (R)	$23.01 (R)	N/A	N/A	N/A
SUMMIT	$4.89 (R)	$4.89 (R)	$23.01 (R)	$200.34 (R)	N/A	N/A
UKUC**	$10.98	$10.98	$51.52	$448.68	$480.30	N/A
UUI**	$10.98	$10.98	$51.52	$448.68	N/A	N/A
YTC**	$3.25	$3.25	$15.23	N/A	N/A	N/A

Direct Trunked Termination, Per Termination

COMPANY	2 Wire Voice Grade	4 Wire Voice Grade	High Capacity DS1	High Capacity DS3	Sychronous Optical Channel OC3	Sychronous Optical Channel OC12
	Rate	**Rate**	**Rate**	**Rate**	**Rate**	**Rate**
ADAK (AEE)	N/A	N/A	$68.79 (R)	N/A	N/A	N/A
ATC*	$64.59	$64.59	$156.34	$1,004.03	$1,045.38	$2,276.12
BETTLES	$25.35 (R)	$25.35 (R)	$61.35 (R)	$393.98 (R)	$410.22 (R)	$893.19 (R)
BBTC	N/A	N/A	$61.35 (R)	N/A	N/A	N/A
BUSH	$20.33 (R)	$20.33 (R)	$49.25 (R)	$316.19 (R)	N/A	N/A
CIRCLE	$49.30 (R)	$49.30 (R)	$119.31 (R)	$766.26 (R)	N/A	N/A
NO.COUNTRY	$49.30 (R)	$49.30 (R)	$119.31 (R)	$766.26 (R)	$797.82 (R)	$1,737.10 (R)
NETCI	$18.18 (R)	$18.18 (R)	$44.02 (R)	$282.72 (R)	$294.36 (R)	$640.89 (R)
OTZ	$49.30 (R)	$49.30 (R)	$119.31 (R)	N/A	N/A	N/A
SUMMIT	$49.30 (R)	$49.30 (R)	$119.31 (R)	$766.26 (R)	N/A	N/A
UKUC**	$110.38	$110.38	$267.26	$1,716.08	$1,786.81	N/A
UUI**	$110.38	$110.38	$267.26	$1,716.08	N/A	N/A
YTC**	$32.65	$32.65	$79.02	N/A	N/A	N/A

Current National Exchange Carrier Association, Inc. Tariff F.C.C. No. 5 Rates Apply *Current JSI Tariff F.C.C. No. 1 Rates Apply for Alaska Telephone Company **Current Moss Adams LLP Tariff F.C.C. No. 1 Rates Apply for United Utilities, Inc., United-KUC, Inc. and Yukon Telephone Company

Issued: _____
Issued By: Alaska Exchange Carriers Association, Inc
By: Keegan Bernier Title: Executive Director

RECEIVED
JUN 22 2026
STATE OF ALASKA
REGULATORY COMMISSION OF ALASKA

ACCESS SERVICE

13. Rates and Charges (Cont'd)

13.2 Switched Access Service (Cont'd)

47 CFR 51.909 required Transitional Intrastate Access Service rates be subject to the same rates and rate structure as functionally equivalent interstate rates.

13.2.2 Recurring Charges (Cont'd)

C. Multiplexing, Per Arrangement
Reference AECA Tariff Section 6.2

COMPANY	DS3 to DS1 Rate	DS1 to Voice Rate
ADAK (AEE)	$403.07 (R)	$155.62 (R)
ATC*	$916.05	$353.68
BETTLES	$359.49 (R)	$138.78 (R)
BBTC	N/A	N/A
BUSH	$288.49 (R)	$111.39 (R)
CIRCLE	$699.11 (R)	$269.93 (R)
NO.COUNTRY	$699.11 (R)	$269.93 (R)
NETCI	$257.94 (R)	$99.59 (R)
OTZ	$699.11 (R)	$269.33 (R)
SUMMIT	$699.11 (R)	$269.33 (R)
UKUC**	$1,565.74	$604.49
UUI**	$1,565.74	$604.49
YTC**	$462.95	$178.73

Current National Exchange Carrier Association, Inc. Tariff F.C.C. No. 5 Rates Apply
*Current JSI Tariff F.C.C. No. 1 Rates Apply for Alaska Telephone Company
**Current Moss Adams LLP Tariff F.C.C. No. 1 Rates Apply for United Utilities, Inc., United-KUC, Inc. and Yukon Telephone Company

	Rate	Reference AECA Tariff Section
D. Common Transport		
Originating Non-Toll Free	$0.000000	6.2
E. Tandem Switched Transport		
Tandem Switched Facility, Per Access Minute Per Mile	$0.000000	6.2
Tandem Switched Termination, Per Access Minute Per Termination	$0.000000	6.2
Joint Tandem Switched Transport, Per Originating Toll Free Only		
Access Minute Per Tandem*** (T)	$0.000000	6.2

***The Joint Tandem Switched Transport rate element applies per tandem to originating toll free minutes only in lieu of the Tandem Switched Facility, Tandem Switched Termination and Tandem Switching rate elements as of July 1, 2021.

Issued: _____
Issued By: Alaska Exchange Carriers Association, Inc
By: Keegan Bernier Title: Executive Director

RECEIVED
MAY 11 2026
STATE OF ALASKA
REGULATORY COMMISSION OF ALASKA

ACCESS SERVICE

13. Rates and Charges (Cont'd)

13.2 Switched Access Service (Cont'd)

47 CFR 51.909 required Transitional Intrastate Access Service rates be subject to the same rates and rate structure as functionally equivalent interstate rates.

13.2.2 Recurring Charges (Cont'd)

F. Local Switching Per Minutes of Use

Reference AECA Tariff Section 6.8

COMPANY	Originating Non-Toll Free Rate	Originating Toll Free Rate	Teminating Rate **
ADAK (AEE)	$0.037743 (I)	$0.000000	$0.0000
ATC	$0.037743 (I)	$0.000000	$0.0000
BETTLES	$0.037743 (I)	$0.000000	$0.0000
BBTC	$0.037743 (I)	$0.000000	$0.0000
BUSH	$0.037743 (I)	$0.000000	$0.0000
CIRCLE	$0.037743 (I)	$0.000000	$0.0000
NO.COUNTRY	$0.037743 (I)	$0.000000	$0.0000
NETCI	$0.037743 (I)	$0.000000	$0.0000
OTZ	$0.037743 (I)	$0.000000	$0.0000
SUMMIT	$0.037743 (I)	$0.000000	$0.0000
UKUC*	$0.037743 (I)	$0.000000	$0.0000
UUI*	$0.037743 (I)	$0.000000	$0.0000
YTC*	$0.037743 (I)	$0.000000	$0.0000

G. Information Surcharge Per 100 Access Minutes

Reference AECA Tariff Section 6.8

Originating Non-Toll Free	$0.099309 (I)
Originating Toll Free	$0.000000
Terminating**	$0.000000

Current National Exchange Carrier Association, Inc. Tariff F.C.C. No. 5 Rates apply for Premium Terminating Rates

*Current Moss Adams LLP Tariff F.C.C. No. 1 Rates Apply for United Utilities, Inc., United-KUC, Inc. and Yukon Telephone Company for Terminating Rates.

**The composite Terminating Local Switching rates shown above include the Terminating Information Surcharge rate element.

RECEIVED
MAY 16 2023
STATE OF ALASKA
REGULATORY COMMISSION OF ALASKA

ACCESS SERVICES

13. Rates and Charges (Cont'd)

13.2 Switched Access Service (Cont'd)

13.2.2 Recurring Charges (Cont'd)

Tariff Section Reference 6.8

H. Toll Free Data Base Access Service Queries

Per Query

COMPANY	(USOC)	**Basic**	(USOC)	**Basic with Vertical Feature**
ADAK (AEE)	_____	$0.0002 (R)	_____	$0.0002 (R)
ATC	_____	$0.0002 (R)	_____	$0.0002 (R)
BETTLES	_____	$0.0002 (R)	_____	$0.0002 (R)
BBTC	_____	$0.0002 (R)	_____	$0.0002 (R)
BUSH	_____	$0.0002 (R)	_____	$0.0002 (R)
CIRCLE	_____	$0.0002 (R)	_____	$0.0002 (R)
NO.COUNTRY	_____	$0.0002 (R)	_____	$0.0002 (R)
NETCI	_____	$0.0002 (R)	_____	$0.0002 (R)
OTZ	_____	$0.0002 (R)	_____	$0.0002 (R)
SUMMIT	_____	$0.0002 (R)	_____	$0.0002 (R)
UKUC	_____	$0.0002 (R)	_____	$0.0002 (R)
UUI	_____	$0.0002 (R)	_____	$0.0002 (R)
YTC	_____	$0.0002 (R)	_____	$0.0002 (R)

RECEIVED
FEB 22 2013
STATE OF ALASKA
REGULATORY COMMISSION OF ALASKA

ACCESS SERVICES

13. Rates and Charges (Cont'd)

13.2 Switched Access Service (Cont'd)

13.2.3 Equal Access Recovery Charge
Tariff Section Reference 6.8

Monthly Rate

COMPANY	(USOC)	Per Presubscribed Equal Access Line	
ADAK (AEE)	_____		
ATC	_____		
BBTC	_____	0.00	
BETTLES	_____		
BUSH	_____		
CIRCLE	_____		
N.COUNTRY	_____		
NETCI	_____		
OTZ	_____		
SUMMIT	_____		
UKUC	_____	0.00	
UUI	_____	0.00	(R)
YTC	_____		

RECEIVED

JUN 27 2014

STATE OF ALASKA
REGULATORY COMMISSION OF ALASKA

ACCESS SERVICES

13. Rates and Charges (Cont'd)

13.2 Switched Access Service (Cont'd)

47 CFR 51.909 required Transitional Intrastate Access Service rates be subject to the same rates and rate structure as functionally equivalent interstate rates. (D)

13.2.4 Presubscription Change Charge

Tariff Section Reference 9.3	**Rate *, ** (T)**
Per Telephone Exchange Service Line or Trunk	
1. Submitted using manual methods	$5.50
2. Submitted using electronic methods	$1.25
3. Submitted using manual methods when both the interLATA PIC and intraLATA PIC selections are changed simultaneously	$2.75
4. Submitted using electronic methods when both the interLATA PIC and intraLATA PIC selections are changed simultaneously	$0.63

*Current National Exchange Carrier Association, Inc. Tariff F.C.C. No. 5 Rates Apply (T)

**Current United Utilities, Inc. and United-KUC, Inc. Tariff F.C.C. No. 1 Rates Apply (N)

RECEIVED
JAN 20 1994
State of Alaska
Public Utilities Commission

ACCESS SERVICES

13. Rates and Charges (Cont'd)

13.2 **SWITCHED ACCESS SERVICE** (Cont'd) (T)

Tariff Section Reference 6.8

13.2.5 **ASSUMED MINUTES OF USE**

		Assumed Minutes Per Month	
(A)	Feature Group A, Two Way Calling (1510 Originating, 2685 Terminating)	4195	
(B)	Feature Group A, Originating Only	1510	
(C)	Feature Group A, Terminating Only	2685	
(D)	Feature Group B, Two Way Calling (3132 Originating, Terminating)	8700	
(E)	Feature Group B, Originating Only	3132	
(F)	Feature Group B, Terminating Only	5568	(T)

Issued: _____
Issued By: Alaska Exchange Carriers Association, Inc.
By: Ruth A. Stub Title: President

RECEIVED

JUL 0 6 2010

STATE OF ALASKA
REGULATORY COMMISSION OF ALASKA

ACCESS SERVICES

13. Rates and Charges (Cont'd)

13.3 Special Access Service

13.3.1a Surcharge For Special Access Service

Regulations concerning charges associated with Surcharge for Special Access Service are set forth in 7.3 preceding.

Per Voice Grade Equivalent

COMPANY	(USOC)	Monthly Rate	
ADAK (AEE)	_____	$25.00	
ATC	_____	25.00	
BETTLES	_____	25.00	
BBTC	_____	25.00	
BUSH	_____	25.00	
CIRCLE	_____	25.00	
			(D)
NO.COUNTRY	_____	25.00	
NETCI	_____	25.00	
OTZ	_____	25.00	
SUMMIT	_____	25.00	
UKUC	_____	25.00	
UUI	_____	25.00	
YTC	_____	25.00	

RECEIVED

JUL 0 6 2010

STATE OF ALASKA
REGULATORY COMMISSION OF ALASKA

ACCESS SERVICES

13. Rates and Charges (Cont'd)

13.3 Special Access Service

13.3.1b Telecommunications Service Priority Charge

Regulations concerning charges associated with Surcharge for Miscellaneous Service are set forth in 9.3 preceding.

Per Circuit

COMPANY	(USOC)	Monthly Rate	(USOC)	Nonrecurring Charge	
ADAK (AEE)	_____	$1.00	_____	$55.00	
ATC	_____	1.00	_____	55.00	
BETTLES	_____	1.00	_____	55.00	
BBTC	_____	1.00	_____	55.00	
BUSH	_____	1.00	_____	55.00	
CIRCLE	_____	1.00	_____	55.00	
					(D)
NO.COUNTRY	_____	1.00	_____	55.00	
NETCI	_____	1.00	_____	55.00	
OTZ	_____	1.00	_____	55.00	
SUMMIT	_____	1.00	_____	55.00	
UKUC	_____	1.00	_____	55.00	
UUI	_____	1.00	_____	55.00	
YTC	_____	1.00	_____	55.00	

Issued: _____
Issued By: Alaska Exchange Carriers Association, Inc
By: Judith A. Colbert Judith A. Colbert Title: Executive Director

RECEIVED
MAR 0 4 2011
STATE OF ALASKA
REGULATORY COMMISSION OF ALASKA

ACCESS SERVICES

13. Rates and Charges (Cont'd)

13.3 Special Access Service (Cont'd)

13.3.1c Special Access Ordering

Regulations concerning charges associated with Access Ordering are set forth in 5.2 and 5.8 preceding.

A. Access Order Charge

COMPANY	(USOC)	ACCESS ORDER CHARGE PER ORDER	
ADAK (AEE)	_____	$76.00	
ATC	_____	97.00	
BETTLES	_____	97.00	
BBTC	_____	76.00	
BUSH	_____	76.00	
CIRCLE*	_____	AVG	
NO.COUNTRY*	_____	AVG	
NETCI	_____	76.00	
OTZ	_____	76.00	
SUMMIT	_____	76.00	
UKUC	_____	86.00	(R)
UUI	_____	86.00	(R)
YTC	_____	76.00	

*Average Schedule Company: current NECA Tariff, FCC No. 5, rates apply.

RECEIVED

MAR 0 4 2011

STATE OF ALASKA
REGULATORY COMMISSION OF ALASKA

ACCESS SERVICES

13. Rates and Charges (Cont'd)

13.3 Special Access Service (Cont'd)

13.3.1c Special Access Ordering (Cont'd)

Regulations concerning charges associated with Access Ordering are set forth in 5.2 and 5.8 preceding.

B. Service Date Change Charge

A Service Date Change Charge will apply, on a per order per occurrence basis, for each service date changed. The AccessOrder Charge as specified in 13.3.1c(A) preceding does not apply. The applicable charge is:

COMPANY	(USOC)	SERVICE DATE CHANGE CHARGE PER ORDER	
ADAK (AEE)	_____	$60.00	
ATC	_____	44.00	
BETTLES	_____	44.00	
BBTC	_____	60.00	
BUSH	_____	60.00	
CIRCLE*	_____	AVG	
NO.COUNTRY*	_____	AVG	
NETCI	_____	60.00	
OTZ	_____	60.00	
SUMMIT	_____	60.00	
UKUC	_____	60.00	(I)
UUI	_____	60.00	(I)
YTC	_____	60.00	

*Average Schedule Company: current NECA Tariff, FCC No. 5, rates apply.

RECEIVED
MAR 0 4 2011
STATE OF ALASKA
REGULATORY COMMISSION OF ALASKA

ACCESS SERVICES

13. Rates and Charges (Cont'd)

13.3 Special Access Service (Cont'd)

13.3.1.c Special Access Ordering (Cont'd)

Regulations concerning charges associated with Access Ordering are set forth in 5.2 and 5.8 preceding.

C. Design Change Charge

The Design Change Charge will apply on a per order per occurrence basis, for each order requiring design change. The applicable charge is:

COMPANY	(USOC)	DESIGN CHANGE CHARGE PER ORDER	
ADAK (AEE)	_____	$84.00	
ATC	_____	44.00	
BETTLES	_____	44.00	
BBTC	_____	84.00	
BUSH	_____	84.00	
CIRCLE*	_____	AVG	
NO.COUNTRY*	_____	AVG	
NETCI	_____	84.00	
OTZ	_____	84.00	
SUMMIT	_____	84.00	
UKUC	_____	84.00	(I)
UUI	_____	84.00	(I)
YTC	_____	84.00	

*Average Schedule Company: current NECA Tariff, FCC No. 5, rates apply.

RECEIVED
MAR 0 4 2011
STATE OF ALASKA
REGULATORY COMMISSION OF ALASKA

ACCESS SERVICES

13. Rates and Charges (Cont'd)

13.3 Special Access Service (Cont'd)

13.3.1c Special Access Ordering (Cont'd)

Regulations concerning charges associated with Access Ordering are set forth in 5.2 and 5.8 preceding.

D. Miscellaneous Service Order Charge

COMPANY	(USOC)	PER OCCURRENCE	
ADAK (AEE)	_____	$123.00	
ATC	_____	44.00	
BETTLES	_____	44.00	
BBTC	_____	123.00	
BUSH	_____	123.00	
CIRCLE*	_____	AVG	
NO.COUNTRY*	_____	AVG	
NETCI	_____	123.00	
OTZ	_____	123.00	
SUMMIT	_____	123.00	
UKUC	_____	123.00	(I)
UUI	_____	123.00	(I)
YTC	_____	123.00	

*Average Schedule Company: current NECA Tariff, FCC No. 5, rates apply.

RECEIVED
JAN 20 1994
State of Alaska
Public Utilities Commission

ACCESS SERVICES

13. Rates and Charges (Cont'd)

13.3 **SPECIAL ACCESS SERVICE** (Cont'd) (T)

13.3.2 **Billing for Special Access Service** (N)

Special Access Rates are billed by each individual telephone company on a company specific basis. The tariff sheets for Special Access Service rates are arranged by Special Access Service with each company and their particular rate listed. A Company specific Uniform Service Order Code (USOC) is listed for those companies providing this information. (N)

(D)

(D)

Issued: _____
Issued By: Alaska Exchange Carriers Association, Inc.
By: Ruth A. Steele Title: President

RECEIVED

JUL 0 6 2010

STATE OF ALASKA
REGULATORY COMMISSION OF ALASKA

ACCESS SERVICES

13. Rates and Charges (Cont'd)

13.3 Special Access Service (Cont'd)

13.3.2 Abbreviations used in this section for company name:

ADAK (AEE)	Adak Eagle Enterprise LLC dba Adak Telephone Utility
ATC	Alaska Telephone Company
BETTLES	Bettles Telephone Company
BBTC	Bristol Bay Telephone Cooperative
BUSH	Bush-Tell, Inc.
CIRCLE*	Circle Telephone
NO. COUNTRY*	North Country Telephone Company (D)
NETCI	Nushagak Electric & Telephone Cooperative, Inc.
OTZ	OTZ Telephone Cooperative
SUMMIT	Summit Telephone Company
UKUC	United-KUC, Inc.
UUI	United Utilities, Inc.
YTC	Yukon Telephone Co., Inc.

*Average Schedule Company: current NECA Tariff, FCC No. 5, rates apply.

RECEIVED
MAR 0 4 2011
STATE OF ALASKA
REGULATORY COMMISSION OF ALASKA

ACCESS SERVICES

13. Rates and Charges (Cont'd)

13.3 Special Access Service (Cont'd)

13.3.2 Voice Grade Service

Regulations concerning Voice Grade are set forth in 7.4 preceding.

A. Channel Termination Per Termination

COMPANY	(USOC)	Monthly Rate Two-Wire		(USOC)	Monthly Rate Four-Wire	
ADAK (AEE)	_____	$863.40		_____	$1381.50	
ATC	_____	47.60		_____	76.16	
BETTLES	_____	54.94		_____	87.90	
BBTC	_____	121.00		_____	193.55	
BUSH	_____	79.70		_____	127.50	
CIRCLE*	_____	AVG		_____	AVG	
NO.COUNTRY*	_____	AVG		_____	AVG	
NETCI	_____	31.71		_____	50.75	
OTZ	_____	60.45		_____	96.75	
SUMMIT	_____	49.56		_____	79.30	
UKUC	_____	63.00	(I)	_____	101.00	(I)
UUI	_____	36.00	(R)	_____	57.00	(R)
YTC	_____	35.47		_____	56.76	

*Average Schedule Company: current NECA Tariff, FCC No. 5, rates apply.

RECEIVED

MAR 0 4 2011

STATE OF ALASKA
REGULATORY COMMISSION OF ALASKA

ACCESS SERVICES

13. Rates and Charges (Cont'd)

13.3 Special Access Service (Cont'd)

13.3.2 Voice Grade Service

Regulations concerning Voice Grade are set forth in 7.4 preceding.

A. Channel Termination Per Termination

Nonrecurring Charge

COMPANY	(USOC)	Two-Wire		(USOC)	Four-Wire	
ADAK (AEE)	_____	$450.00		_____	$450.00	
ATC	_____	325.00		_____	325.00	
BETTLES	_____	325.00		_____	325.00	
BBTC	_____	450.00		_____	450.00	
BUSH	_____	450.00		_____	450.00	
CIRCLE*	_____	AVG		_____	AVG	
NO.COUNTRY*	_____	AVG		_____	AVG	
NETCI	_____	450.00		_____	450.00	
OTZ	_____	450.00		_____	450.00	
SUMMIT	_____	450.00		_____	450.00	
UKUC	_____	598.00	(I)	_____	598.00	(I)
UUI	_____	337.00	(R)	_____	337.00	(R)
YTC	_____	450.00		_____	450.00	

*Average Schedule Company: current NECA Tariff, FCC No. 5, rates apply.

Issued: _____

Issued By: Alaska Exchange Carriers Association, Inc

By: Judith A. Colbert Judith A. Colbert Title: Executive Director

RECEIVED

MAR 0 4 2011

STATE OF ALASKA
REGULATORY COMMISSION OF ALASKA

ACCESS SERVICES

13. Rates and Charges (Cont'd)

13.3 Special Access Service (Cont'd)

13.3.2 Voice Grade Service

Regulations concerning Voice Grade are set forth in 7.4 preceding.

B. Channel Mileage

1. Channel Mileage Facility

		Monthly Rate				
COMPANY	(USOC)	Per Mile 2-Wire		(USOC)	Per Mile 4-Wire	
ADAK (AEE)		$3.53			$3.53	
ATC	_____	None		_____	None	
BETTLES	_____	None		_____	None	
BBTC	_____	None		_____	None	
BUSH	_____	None		_____	None	
CIRCLE*	_____	AVG		_____	AVG	
NO.COUNTRY*	_____	AVG		_____	AVG	
NETCI	_____	None		_____	None	
OTZ	_____	None		_____	None	
SUMMIT	_____	None		_____	None	
UKUC	_____	5.00	(I)	_____	5.00	(I)
UUI	_____	3.00	(R)	_____	3.00	(R)
YTC	_____	None		_____	None	

*Average Schedule Company: current NECA Tariff, FCC No. 5, rates apply.

Issued: _____
Issued By: Alaska Exchange Carriers Association, Inc
By: Judith A. Colbert Judith A. Colbert Title: Executive Director

RECEIVED
JAN 13 1994
State of Alaska
Public Utilities Commission

TELEPHONE EXCHANGE CARRIERS OF ALASKA

ACCESS SERVICES

13. Rates and Charges (Cont'd)

(D)

(D)

Tariff Advice No. 19 Effective: January 1, 1994

Issued:
Issued By: Alaska Exchange Carriers Association, Inc.
By: Ruth A. Stubs Title: President

RECEIVED
MAR 0 4 2011
STATE OF ALASKA
REGULATORY COMMISSION OF ALASKA

ACCESS SERVICES

13. Rates and Charges (Cont'd)

13.3 Special Access Service (Cont'd)

13.3.2 Voice Grade Service (Cont'd)

Regulations concerning Voice Grade are set forth in 7.4 preceding.

B. Channel Mileage

2. Channel Mileage Termination

Per Termination

COMPANY	(USOC)	Monthly Rate 2-Wire		(USOC)	4-Wire	
ADAK (AEE)		$35.48			$35.48	
ATC	_____	None		_____	None	
BETTLES	_____	None		_____	None	
BBTC	_____	None		_____	None	
BUSH	_____	None		_____	None	
CIRCLE*	_____	AVG		_____	AVG	
NO.COUNTRY*	_____	AVG		_____	AVG	
NETCI	_____	None		_____	None	
OTZ	_____	None		_____	None	
SUMMIT	_____	None		_____	None	
UKUC	_____	45.00	(I)	_____	45.00	(I)
UUI	_____	26.00	(R)	_____	26.00	(R)
YTC	_____	None		_____	None	

*Average Schedule Company: current NECA Tariff, FCC No. 5, rates apply.

Issued: _____
Issued By: Alaska Exchange Carriers Association, Inc
By: Judith A. Colbert Judith A. Colbert Title: Executive Director

RECEIVED
JAN 13 1994
State of Alaska
Public Utilities Commission

TELEPHONE EXCHANGE CARRIERS OF ALASKA

ACCESS SERVICES

(D)

(D)

Tariff Advice No. 19 Effective: January 1, 1994

Issued: _____
Issued By: Alaska Exchange Carriers Association, Inc.
By: Ruth A. Stoler Title: President

RECEIVED
JAN 20 1994
State of Alaska
Public Utilities Commission

TELEPHONE EXCHANGE CARRIERS OF ALASKA

ACCESS SERVICES

13. Rates and Charges (Cont'd)

13.3 **SPECIAL ACCESS SERVICE** (Cont'd) (T)

13.3.2 **VOICE GRADE SERVICE** (Cont'd) (T)
(L)
|
(L)
(L1)
|
(L1)
(L2)
|
(L2)

(L) Section 13.3.2 (A), MTA Voice Grade, Channel Termination, previously shown on First Revised Sheet No. 283.5 has been relocated to Third Revised Sheet No. 283, and has been restructured for clarification with no substantive changes.

(L1) Section 13.3.2(B)(1), MTA Voice Grade Channel Mileage Facility, previously shown on First Revised Sheet No. 283.5 has been relocated to Third Revised Sheet No. 283.2, and has been restructured for clarification with no substantive changes.

(L2) Section 13.3.2(B)(2), MTA Voice Grade Channel Mileage Termination, previously shown on First Revised Sheet No. 283.5 has been relocated to Third Revised Sheet No. 283.3, and has been restructured for clarification with no substantive changes.

Tariff Advice No. 18 Effective: December 31, 1993

Issued: _____
Issued By: Alaska Exchange Carriers Association, Inc.
By: Ruth A. Steele Title: President

RECEIVED

MAR 0 4 2011

STATE OF ALASKA
REGULATORY COMMISSION OF ALASKA

ACCESS SERVICES

13. Rates and Charges (Cont'd)

13.3 Special Access Service (Cont'd)

13.3.2 Voice Grade Service

Regulations concerning Voice Grade are set forth in 7.4 preceding.

C. Optional Features And Functions

1. Bridging

a. Voice Bridging, Per Port

COMPANY	(USOC)	Monthly Rate 2-Wire		(USOC)	Monthly Rate 4-Wire	
ADAK (AEE)		$6.94			$6.94	
ATC	_____	8.18		_____	8.18	
BETTLES	_____	8.18		_____	8.18	
BBTC	_____	6.94		_____	6.94	
BUSH	_____	6.94		_____	6.94	
CIRCLE*	_____	AVG		_____	AVG	
NO.COUNTRY*	_____	AVG		_____	AVG	
NETCI	_____	4.44		_____	4.44	
OTZ	_____	9.72		_____	9.72	
SUMMIT	_____	6.94		_____	6.94	
UKUC	_____	6.64	(R)	_____	6.64	(R)
UUI	_____	6.64	(R)	_____	6.64	(R)
YTC	_____	4.97		_____	4.97	

*Average Schedule Company: current NECA Tariff, FCC No. 5, rates apply.

RECEIVED

JUL 0 6 2010

STATE OF ALASKA
REGULATORY COMMISSION OF ALASKA

ACCESS SERVICES

13. Rates and Charges (Cont'd)

13.3 Special Access Service (Cont'd)

13.3.2 Voice Grade Service

Regulations concerning Voice Grade are set forth in 7.4 preceding.

C. Optional Features And Functions (Cont'd)

1. Bridging (Cont'd)

a. Voice Bridging, Per Port

COMPANY	(USOC)	**Nonrecurring Charge**
ADAK (AEE)	_____	None
ATC	_____	None
BETTLES	_____	None
BBTC	_____	None
BUSH	_____	None
CIRCLE*	_____	AVG
NO.COUNTRY*	_____	AVG
NETCI	_____	None
OTZ	_____	None
SUMMIT	_____	ICB
UKUC	_____	None
UUI	_____	None
YTC	_____	None

(D)

*Average Schedule Company: current NECA Tariff, FCC No. 5, rates apply.

RECEIVED

MAR 0 4 2011

STATE OF ALASKA
REGULATORY COMMISSION OF ALASKA

ACCESS SERVICES

13. Rates and Charges (Cont'd)

13.3 Special Access Service (Cont'd)

13.3.2 Voice Grade Service (Cont'd)

Regulations concerning Voice Grade are set forth in 7.4 preceding.

C. Optional Features And Functions (Cont'd)

1. Bridging (Cont'd)

b. Data Bridging, Per Port

COMPANY	Monthly Rate (USOC)	2-Wire		Monthly Rate (USOC)	4-Wire	
ADAK (AEE)	_____	$6.94		_____	$6.94	
ATC	_____	8.18		_____	8.18	
BETTLES	_____	8.18		_____	5.79	
BBTC	_____	6.94		_____	6.94	
BUSH	_____	6.94		_____	6.94	
CIRCLE*	_____	AVG		_____	AVG	
NO.COUNTRY*	_____	AVG		_____	AVG	
NETCI	_____	4.44		_____	4.44	
OTZ	_____	9.72		_____	9.72	
SUMMIT	_____	6.94		_____	6.94	
UKUC	_____	6.64	(R)	_____	6.64	(R)
UUI	_____	6.64	(R)	_____	6.64	(R)
YTC	_____	4.97		_____	4.97	

*Average Schedule Company: current NECA Tariff, FCC No. 5, rates apply.

RECEIVED

JUL 0 6 2010

STATE OF ALASKA
REGULATORY COMMISSION OF ALASKA

ACCESS SERVICES

13. Rates and Charges (Cont'd)

13.3 Special Access Service (Cont'd)

13.3.2 Voice Grade Service (Cont'd)

Regulations concerning Voice Grade are set forth in 7.4 preceding.

C. Optional Features And Functions (Cont'd)

1. Bridging (Cont'd)

b. Data Bridging, Per Port

COMPANY	(USOC)	**2-Wire**	Nonrecurring Charges (USOC)	**4-Wire**	
ADAK (AEE)	_____	None	_____	None	
ATC	_____	None	_____	None	
BETTLES	_____	None	_____	None	
BBTC	_____	None	_____	None	
BUSH	_____	None	_____	None	
CIRCLE*	_____	AVG	_____	AVG	(D)
NO.COUNTRY*	_____	AVG	_____	AVG	
NETCI	_____	None	_____	None	
OTZ	_____	None	_____	None	
SUMMIT	_____	ICB	_____	ICB	
UKUC	_____	None	_____	None	
UUI	_____	None	_____	None	
YTC	_____	None	_____	None	

*Average Schedule Company: current NECA Tariff, FCC No. 5, rates apply.

RECEIVED

MAR 0 4 2011

STATE OF ALASKA
REGULATORY COMMISSION OF ALASKA

ACCESS SERVICES

13. Rates and Charges (Cont'd)

13.3 Special Access Service (Cont'd)

13.3.2 Voice Grade Service (Cont'd)

Regulations concerning Voice Grade are set forth in 7.4 preceding.

C. Optional Features And Functions (Cont'd)

1. Bridging (Cont'd)

c. Telephoto Bridging, Per Port

COMPANY	Monthly Rate (USOC)	2-Wire		Monthly Rate (USOC)	4-Wire	
ADAK (AEE)	_____	$6.94		_____	$6.94	
ATC	_____	8.18		_____	8.18	
BETTLES	_____	8.18		_____	8.18	
BBTC	_____	6.94		_____	6.94	
BUSH	_____	6.94		_____	6.94	
CIRCLE*	_____	AVG		_____	AVG	
NO.COUNTRY*	_____	AVG		_____	AVG	
NETCI	_____	4.44		_____	4.44	
OTZ	_____	9.72		_____	9.72	
SUMMIT	_____	6.94		_____	6.94	
UKUC	_____	6.64	(R)	_____	6.64	(R)
UUI	_____	6.64	(R)	_____	6.64	(R)
YTC	_____	4.97		_____	4.97	

*Average Schedule Company: current NECA Tariff, FCC No. 5, rates apply.

RECEIVED

JUL 0 6 2010

STATE OF ALASKA
REGULATORY COMMISSION OF ALASKA

ACCESS SERVICES

13. Rates and Charges (Cont'd)

13.3 Special Access Service (Cont'd)

13.3.2 Voice Grade Service (Cont'd)

Regulations concerning Voice Grade are set forth in 7.4 preceding.

C. Optional Features And Functions (Cont'd)

1. Bridging (Cont'd)

c. Telephoto Bridging, Per Port (Cont'd)

COMPANY	(USOC)	Nonrecurring Charges 2-Wire	(USOC)	4-Wire	
ADAK (AEE)	_____	None	_____	None	
ATC	_____	None	_____	None	
BETTLES	_____	None	_____	None	
BBTC	_____	None	_____	None	
BUSH	_____	None	_____	None	
CIRCLE*	_____	AVG	_____	AVG	
					(D)
NO.COUNTRY*	_____	AVG	_____	AVG	
NETCI	_____	None	_____	None	
OTZ	_____	None	_____	None	
SUMMIT	_____	ICB	_____	ICB	
UKUC	_____	None	_____	None	
UUI	_____	None	_____	None	
YTC	_____	None	_____	None	

*Average Schedule Company: current NECA Tariff, FCC No. 5, rates apply.

RECEIVED

MAR 0 4 2011

STATE OF ALASKA
REGULATORY COMMISSION OF ALASKA

ACCESS SERVICES

13. Rates and Charges (Cont'd)

13.3 Special Access Service (Cont'd)

13.3.2 Voice Grade Service (Cont'd)

Regulations concerning Voice Grade are set forth in 7.4. preceding.

C. Optional Features And Functions (Cont'd)

1. Bridging (Cont'd)

d. Dataphone Select-A-Station Sequential Arrangement, Ports per Channel Connected

COMPANY	(USOC)	Monthly Rate 2-Wire		(USOC)	Monthly Rate 4-Wire	
ADAK (AEE)	_____	$23.69		_____	$125.67	
ATC	_____	27.93		_____	148.14	
BETTLES	_____	27.93		_____	148.14	
BBTC	_____	23.69		_____	125.67	
BUSH	_____	23.69		_____	125.67	
CIRCLE*	_____	AVG		_____	AVG	
NO.COUNTRY*	_____	AVG		_____	AVG	
NETCI	_____	15.16		_____	80.42	
OTZ	_____	33.17		_____	175.94	
SUMMIT	_____	23.69		_____	125.67	
UKUC	_____	22.66	(R)	_____	120.20	(R)
UUI	_____	22.66	(R)	_____	120.20	(R)
YTC	_____	16.96		_____	89.95	

*Average Schedule Company: current NECA Tariff, FCC No. 5, rates apply.

RECEIVED

JUL 0 6 2010

STATE OF ALASKA
REGULATORY COMMISSION OF ALASKA

ACCESS SERVICES

13. Rates and Charges (Cont'd)

13.3 Special Access Service (Cont'd)

13.3.2 Voice Grade Service (Cont'd)

Regulations concerning Voice Grade are set forth in 7.4. preceding.

C. Optional Features And Functions (Cont'd)

1. Bridging (Cont'd)

d. Dataphone Select-A-Station Sequential Arrangement, Ports Per Channel Connected (Cont'd)

		Nonrecurring Charge		
COMPANY	(USOC)	**2-Wire**	(USOC)	**4-Wire**
ADAK (AEE)	_____	None	_____	None
ATC	_____	None	_____	None
BETTLES	_____	None	_____	None
BBTC	_____	None	_____	None
BUSH	_____	None	_____	None
CIRCLE*	_____	AVG	_____	AVG
NO.COUNTRY*	_____	AVG	_____	AVG
NETCI	_____	None	_____	None
OTZ	_____	None	_____	None
SUMMIT	_____	ICB	_____	ICB
UKUC	_____	None	_____	None
UUI	_____	None	_____	None
YTC	_____	None	_____	None

(D)

*Average Schedule Company: current NECA Tariff, FCC No. 5, rates apply.

RECEIVED

MAR 0 4 2011

STATE OF ALASKA
REGULATORY COMMISSION OF ALASKA

ACCESS SERVICES

13. Rates and Charges (Cont'd)

13.3 Special Access Service (Cont'd)

13.3.2 Voice Grade Service (Cont'd)

Regulations concerning Voice Grade are set forth in 7.4. preceding.

C. Optional Features And Functions Cont'd)

1. Bridging (Cont'd)

d. Dataphone Select-A-Station (Cont'd) Addressable Arrangement, Ports Per Channel Connected

COMPANY	(USOC)	Monthly Rate 2-Wire		(USOC)	Monthly Rate 4-Wire	
ADAK (AEE)	_____	$23.69		_____	$125.67	
ATC	_____	29.89		_____	129.39	
BETTLES	_____	29.89		_____	129.39	
BBTC	_____	23.69		_____	125.67	
BUSH	_____	23.69		_____	125.67	
CIRCLE*	_____	AVG		_____	AVG	
NO.COUNTRY*	_____	AVG		_____	AVG	
NETCI	_____	15.16		_____	80.42	
OTZ	_____	33.17		_____	175.94	
SUMMIT	_____	25.35		_____	109.76	
UKUC	_____	24.25	(R)	_____	104.98	(R)
UUI	_____	24.25	(R)	_____	104.98	(R)
YTC	_____	16.96		_____	89.95	

*Average Schedule Company: current NECA Tariff, FCC No. 5, rates apply.

RECEIVED

JUL 0 6 2010

STATE OF ALASKA
REGULATORY COMMISSION OF ALASKA

ACCESS SERVICES

13. Rates and Charges (Cont'd)

13.3 Special Access Service (Cont'd)

13.3.2 Voice Grade Service (Cont'd)

Regulations concerning Voice Grade are set forth in 7.4. preceding.

C. Optional Features And Functions Cont'd)

1. Bridging (Cont'd)

d. Dataphone Select-A-Station (Cont'd) Addressable Arrangement, Ports Per Channel Connected

COMPANY	(USOC)	Nonrecurring Charge 2-Wire	(USOC)	4-Wire
ADAK (AEE)	_____	None	_____	None
ATC	_____	None	_____	None
BETTLES	_____	None	_____	None
BBTC	_____	None	_____	None
BUSH	_____	None	_____	None
CIRCLE*	_____	AVG	_____	AVG
NO.COUNTRY*	_____	AVG	_____	AVG (D)
NETCI	_____	None	_____	None
OTZ	_____	None	_____	None
SUMMIT	_____	ICB	_____	ICB
UKUC	_____	None	_____	None
UUI	_____	None	_____	None
YTC	_____	None	_____	None

*Average Schedule Company: current NECA Tariff, FCC No. 5, rates apply.

Issued: _____

Issued By: Alaska Exchange Carriers Association, Inc

By: Judith A. Colbert Title: Executive Director

RECEIVED

MAR 0 4 2011

STATE OF ALASKA
REGULATORY COMMISSION OF ALASKA

ACCESS SERVICES

13. Rates and Charges (Cont'd)

13.3 Special Access Service (Cont'd)

13.3.2 Voice Grade Service (Cont'd)

Regulations concerning Voice Grade are set forth in 7.4. preceding.

C. Optional Features And Functions (Cont'd)

1. Bridging (Cont'd)

e. Telemetry And Alarm Bridging
Active Bridging Channel Connections,
Per Channel Connected

COMPANY	(USOC)	Monthly Rate Split Band		(USOC)	Monthly Rate Summation	
ADAK (AEE)	_____	$11.06		_____	$4.32	
ATC	_____	13.04		_____	5.09	
BETTLES	_____	13.04		_____	5.09	
BBTC	_____	11.06		_____	4.32	
BUSH	_____	11.06		_____	4.32	
CIRCLE*	_____	AVG		_____	AVG	
NO.COUNTRY*	_____	AVG		_____	AVG	
NETCI	_____	7.08		_____	2.76	
OTZ	_____	15.48		_____	6.05	
SUMMIT	_____	11.06		_____	4.32	
UKUC	_____	10.58	(R)	_____	4.13	(R)
UUI	_____	10.58	(R)	_____	4.13	(R)
YTC	_____	7.92		_____	3.09	

*Average Schedule Company: current NECA Tariff, FCC No. 5, rates apply.

RECEIVED

JUL 0 6 2010

STATE OF ALASKA
REGULATORY COMMISSION OF ALASKA

ACCESS SERVICES

13. Rates and Charges (Cont'd)

13.3 Special Access Service (Cont'd)

13.3.2 Voice Grade Service (Cont'd)

Regulations concerning Voice Grade are set forth in 7.4. preceding.

C. Optional Features And Functions (Cont'd)

1. Bridging (Cont'd)

e. Telemetry And Alarm Bridging Active Bridging Channel Connections, Per Channel Connected (Cont'd)

COMPANY	(USOC)	Nonrecurring Charges Split Band	(USOC)	Summation
ADAK (AEE)	_____	None	_____	None
ATC	_____	None	_____	None
BETTLES	_____	None	_____	None
BBTC	_____	None	_____	None
BUSH	_____	None	_____	None
CIRCLE*	_____	AVG	_____	AVG
NO.COUNTRY*	_____	AVG	_____	AVG
NETCI	_____	None	_____	None
OTZ	_____	None	_____	None
SUMMIT	_____	ICB	_____	ICB
UKUC	_____	None	_____	None
UUI	_____	None	_____	None
YTC	_____	None	_____	None

(D)

*Average Schedule Company: current NECA Tariff, FCC No. 5, rates apply.

RECEIVED
MAR 0 4 2011
STATE OF ALASKA
REGULATORY COMMISSION OF ALASKA

ACCESS SERVICES

13. Rates and Charges (Cont'd)

13.3 Special Access Service (Cont'd)

13.3.2 Voice Grade Service (Cont'd)

Regulations concerning Voice Grade are set forth in 7.4. preceding.

C. Optional Features And Functions (Cont'd)

1. Bridging (Cont'd)

e. Telemetry And Alarm Bridging
Passive Bridging
Channel Connections,
Per Channel Connected (Cont'd)

COMPANY	(USOC)	Monthly Rate	
ADAK (AEE)	_____	$0.30	
ATC	_____	0.35	
BETTLES	_____	0.35	
BBTC	_____	0.30	
BUSH	_____	0.30	
CIRCLE*	_____	AVG	
NO.COUNTRY*	_____	AVG	
NETCI	_____	0.19	
OTZ	_____	0.42	
SUMMIT	_____	0.30	
UKUC	_____	0.29	(R)
UUI	_____	0.29	(R)
YTC	_____	0.21	

*Average Schedule Company: current NECA Tariff, FCC No. 5, rates apply.

RECEIVED

JUL 0 6 2010

STATE OF ALASKA
REGULATORY COMMISSION OF ALASKA

ACCESS SERVICES

13. Rates and Charges (Cont'd)

13.3 Special Access Service (Cont'd)

13.3.2 Voice Grade Service (Cont'd)

Regulations concerning Voice Grade are set forth in 7.4. preceding.

C. Optional Features And Functions (Cont'd)

1. Bridging (Cont'd)

e. Telemetry And Alarm Bridging
Passive Bridging
Channel Connections,
Per Channel Connected (Cont'd)

COMPANY	(USOC)	Nonrecurring Charges
ADAK (AEE)	_____	None
ATC	_____	None
BETTLES	_____	None
BBTC	_____	None
BUSH	_____	None
CIRCLE*	_____	AVG
NO.COUNTRY*	_____	AVG
NETCI	_____	None
OTZ	_____	None
SUMMIT	_____	ICB
UKUC	_____	None
UUI	_____	None
YTC	_____	None

(D)

*Average Schedule Company: current NECA Tariff, FCC No. 5, rates apply.

RECEIVED
MAR 0 4 2011
STATE OF ALASKA
REGULATORY COMMISSION OF ALASKA

ACCESS SERVICES

13. Rates and Charges (Cont'd)

13.3 Special Access Service (Cont'd)

13.3.2 Voice Grade Service (Cont'd)

Regulations concerning Voice Grade are set forth in 7.4. preceding.

C. Optional Features And Functions (Cont'd)

2. Conditioning Per Termination

a. C Type

COMPANY	(USOC)	Monthly Rate		(USOC)	Nonrecurring Charge
ADAK (AEE)	_____	$7.69		_____	None
ATC	_____	9.06		_____	None
BETTLES	_____	9.06		_____	None
BBTC	_____	7.69		_____	None
BUSH	_____	7.69		_____	None
CIRCLE*	_____	AVG		_____	AVG
NO.COUNTRY*	_____	AVG		_____	AVG
NETCI	_____	4.92		_____	None
OTZ	_____	10.77		_____	None
SUMMIT	_____	7.69		_____	None
UKUC	_____	8.01	(R)	_____	None
UUI	_____	8.01	(R)	_____	None
YTC	_____	5.50		_____	None

*Average Schedule Company: current NECA Tariff, FCC No. 5, rates apply.

RECEIVED

JUL 0 6 2010

STATE OF ALASKA
REGULATORY COMMISSION OF ALASKA

ACCESS SERVICES

13. Rates and Charges (Cont'd)

13.3 Special Access Service (Cont'd)

13.3.2 Voice Grade Service (Cont'd)

Regulations concerning Voice Grade are set forth in 7.4. preceding.

C. Optional Features And Functions (Cont'd)

2. Conditioning Per Termination (Cont'd)

b. Improved Attenuation Distortion

COMPANY	(USOC)	Monthly Rate	(USOC)	Nonrecurring Charge	
ADAK (AEE)	_____	None	_____	None	
ATC	_____	None	_____	None	
BETTLES	_____	None	_____	None	
BBTC	_____	None	_____	None	
BUSH	_____	None	_____	None	
CIRCLE*	_____	AVG	_____	AVG	
					(D)
NO.COUNTRY*	_____	AVG	_____	AVG	
NETCI	_____	None	_____	None	
OTZ	_____	None	_____	None	
SUMMIT	_____	ICB	_____	ICB	
UKUC	_____	None	_____	None	
UUI	_____	None	_____	None	
YTC	_____	None	_____	None	

*Average Schedule Company: current NECA Tariff, FCC No. 5, rates apply.

RECEIVED

JUL 0 6 2010

STATE OF ALASKA
REGULATORY COMMISSION OF ALASKA

ACCESS SERVICES

13. Rates and Charges (Cont'd)

13.3 Special Access Service (Cont'd)

13.3.2 Voice Grade Service (Cont'd)

Regulations concerning Voice Grade are set forth in 7.4. preceding.

C. Optional Features And Functions (Cont'd)

2. Conditioning Per Termination (Cont'd)

c. Improved Envelope Delay Distortion

COMPANY	(USOC)	Monthly Rate	(USOC)	Nonrecurring Charge
ADAK (AEE)	_____	None	_____	None
ATC	_____	None	_____	None
BETTLES	_____	None	_____	None
BBTC	_____	None	_____	None
BUSH	_____	None	_____	None
CIRCLE*	_____	AVG	_____	AVG
NO.COUNTRY*	_____	AVG	_____	AVG
NETCI	_____	None	_____	None
OTZ	_____	None	_____	None
SUMMIT	_____	ICB	_____	ICB
UKUC	_____	None	_____	None
UUI	_____	None	_____	None
YTC	_____	None	_____	None

(D)

*Average Schedule Company: current NECA Tariff, FCC No. 5, rates apply.

RECEIVED
MAR 0 4 2011
STATE OF ALASKA
REGULATORY COMMISSION OF ALASKA

ACCESS SERVICES

13. Rates and Charges (Cont'd)

13.3 Special Access Service (Cont'd)

13.3.2 Voice Grade Service (Cont'd)

Regulations concerning Voice Grade are set forth in 7.4. preceding.

I. Optional Features And Functions (Cont'd)

2. Conditioning Per Termination (Cont'd)

d. Data Capability

COMPANY	(USOC)	Monthly Rate		(USOC)	Nonrecurring Charge
ADAK (AEE)	_____	$7.69		_____	None
ATC	_____	6.23		_____	None
BETTLES	_____	6.23		_____	None
BBTC	_____	7.69		_____	None
BUSH	_____	7.69		_____	None
CIRCLE*	_____	AVG		_____	AVG
NO.COUNTRY*	_____	AVG		_____	AVG
NETCI	_____	4.92		_____	None
OTZ	_____	10.77		_____	None
SUMMIT	_____	7.32		_____	None
UKUC	_____	7.11	(I)	_____	None
UUI	_____	7.11	(I)	_____	None
YTC	_____	5.50		_____	None

*Average Schedule Company: current NECA Tariff, FCC No. 5, rates apply.

RECEIVED
MAR 0 4 2011
STATE OF ALASKA
REGULATORY COMMISSION OF ALASKA

ACCESS SERVICES

13. Rates and Charges (Cont'd)

13.3 Special Access Service (Cont'd)

13.3.2 Voice Grade Service (Cont'd)

Regulations concerning Voice Grade are set forth in 7.4. preceding.

C. Optional Features And Functions (Cont'd)

2. Conditioning Per Termination (Cont'd)

e.Telephoto Capability

COMPANY	(USOC)	Monthly Rate		Nonrecurring (USOC)	Charge
ADAK (AEE)	_____	$9.64		_____	None
ATC	_____	11.36		_____	None
BETTLES	_____	11.36		_____	None
BBTC	_____	9.64		_____	None
BUSH	_____	9.64		_____	None
CIRCLE*	_____	AVG		_____	AVG
NO.COUNTRY*	_____	AVG		_____	AVG
NETCI	_____	6.17		_____	None
OTZ	_____	13.50		_____	None
SUMMIT	_____	9.64		_____	None
UKUC	_____	9.22	(R)	_____	None
UUI	_____	9.22	(R)	_____	None
YTC	_____	6.90		_____	None

*Average Schedule Company: current NECA Tariff, FCC No. 5, rates apply.

RECEIVED

JUL 0 6 2010

STATE OF ALASKA
REGULATORY COMMISSION OF ALASKA

ACCESS SERVICES

13. Rates and Charges (Cont'd)

13.3 Special Access Service (Cont'd)

13.3.2 Voice Grade Service (Cont'd)

Regulations concerning Voice Grade are set forth in 7.4. preceding.

C. Optional Features And Functions (Cont'd)

2. Conditioning Per Termination (Cont'd)

f. Telephoto Capability (VG11 & VGC)

COMPANY	(USOC)	Monthly Rate	(USOC)	Nonrecurring Charge	
ADAK (AEE)	_____		_____		
ATC	_____		_____		
BETTLES	_____		_____		
BBTC	_____		_____		
BUSH	_____		_____		
CIRCLE*	_____		_____		
					(D)
NO.COUNTRY*	_____		_____		
NETCI	_____		_____		
OTZ	_____		_____		
SUMMIT	_____		_____		
UKUC	_____		_____		
UUI	_____		_____		
YTC	_____		_____		

*Average Schedule Company: current NECA Tariff, FCC No. 5, rates apply.

RECEIVED

JUL 0 6 2010

STATE OF ALASKA
REGULATORY COMMISSION OF ALASKA

ACCESS SERVICES

13. Rates and Charges (Cont'd)

13.3 Special Access Service (Cont'd)

13.3.2 Voice Grade Service (Cont'd)

Regulations concerning Voice Grade are set forth in 7.4. preceding.

C. Optional Features And Functions (Cont'd)

2. Conditioning Per Termination

g. Sealing Current

COMPANY	(USOC)	Monthly Rate	(USOC)	Nonrecurring Charge
ADAK (AEE)	_____	None	_____	None
ATC	_____	None	_____	None
BETTLES	_____	None	_____	None
BBTC	_____	None	_____	None
BUSH	_____	None	_____	None
CIRCLE*	_____	AVG	_____	AVG
NO.COUNTRY*	_____	AVG	_____	AVG
NETCI	_____	None	_____	None
OTZ	_____	None	_____	None
SUMMIT	_____	ICB	_____	ICB
UKUC	_____	None	_____	None
UUI	_____	None	_____	None
YTC	_____	None	_____	None

(D)

*Average Schedule Company: current NECA Tariff, FCC No. 5, rates apply.

RECEIVED

MAR 0 4 2011

STATE OF ALASKA
REGULATORY COMMISSION OF ALASKA

ACCESS SERVICES

13. Rates and Charges (Cont'd)

13.3 Special Access Service (Cont'd)

13.3.2 Voice Grade Service (Cont'd)

Regulations concerning Voice Grade are set forth in 7.4. preceding.

C. Optional Features And Functions (Cont'd)

3. Improved Return Loss For Effective Two-Wire To Four-Wire Transmission Per Termination

COMPANY	(USOC)	Monthly Rate 2-WIRE		(USOC)	Nonrecurring Charge
ADAK (AEE)	_____	$13.66		_____	None
ATC	_____	16.10		_____	None
BETTLES	_____	16.10		_____	None
BBTC	_____	13.66		_____	None
BUSH	_____	13.66		_____	None
CIRCLE*	_____	AVG		_____	AVG
NO.COUNTRY*	_____	AVG		_____	AVG
NETCI	_____	8.74		_____	None
OTZ	_____	19.12		_____	None
SUMMIT	_____	13.66		_____	None
UKUC	_____	13.07	(R)	_____	None
UUI	_____	13.07	(R)	_____	None
YTC	_____	9.78		_____	None

*Average Schedule Company: current NECA Tariff, FCC No. 5, rates apply.

RECEIVED

MAR 0 4 2011

STATE OF ALASKA
REGULATORY COMMISSION OF ALASKA

ACCESS SERVICES

13. Rates and Charges (Cont'd)

13.3 Special Access Service (Cont'd)

13.3.2 Voice Grade Service (Cont'd)

Regulations concerning Voice Grade are set forth in 7.4. preceding.

C. Optional Features And Functions (Cont'd)

3. Improved Return Loss For Effective Two-Wire To Four-Wire Transmission Per Termination

COMPANY	Monthly Rate (USOC)	4-WIRE		(USOC)	Nonrecurring Charge
ADAK (AEE)	_____	$13.66		_____	None
ATC	_____	16.10		_____	None
BETTLES	_____	16.10		_____	None
BBTC	_____	13.66		_____	None
BUSH	_____	13.66		_____	None
CIRCLE*	_____	AVG		_____	AVG
NO.COUNTRY*	_____	AVG		_____	AVG
NETCI	_____	8.74		_____	None
OTZ	_____	19.12		_____	None
SUMMIT	_____	13.66		_____	None
UKUC	_____	13.07	(R)	_____	None
UUI	_____	13.07	(R)	_____	None
YTC	_____	9.78		_____	None

*Average Schedule Company: current NECA Tariff, FCC No. 5, rates apply.

RECEIVED
MAR 0 4 2011
STATE OF ALASKA
REGULATORY COMMISSION OF ALASKA

ACCESS SERVICES

13. Rates and Charges (Cont'd)

13.3 Special Access Service (Cont'd)

13.3.2 Voice Grade Service (Cont'd)

Regulations concerning Voice Grade are set forth in 7.4. preceding.

C. Optional Features And Functions (Cont'd)

4. Customer-Specified Receive Level, Per Two-Wire Termination

COMPANY	(USOC)	Monthly Rate		(USOC)	Nonrecurring Charge
ADAK (AEE)	_____	$9.40		_____	None
ATC	_____	11.08		_____	None
BETTLES	_____	11.08		_____	None
BBTC	_____	9.40		_____	None
BUSH	_____	9.40		_____	None
CIRCLE*	_____	AVG		_____	AVG
NO.COUNTRY*	_____	AVG		_____	AVG
NETCI	_____	6.02		_____	None
OTZ	_____	13.16		_____	None
SUMMIT	_____	9.40		_____	None
UKUC	_____	8.99	(R)	_____	None
UUI	_____	8.99	(R)	_____	None
YTC	_____	6.73		_____	None

*Average Schedule Company: current NECA Tariff, FCC No. 5, rates apply.

RECEIVED
MAR 0 4 2011
STATE OF ALASKA
REGULATORY COMMISSION OF ALASKA

ACCESS SERVICES

13. Rates and Charges (Cont'd)

13.3 Special Access Service (Cont'd)

13.3.2 Voice Grade Service (Cont'd)

Regulations concerning Voice Grade are set forth in 7.4. preceding.

C. Optional Features And Functions (Cont'd)

5. Multiplexing, Per Arrangement Voice To Telegraph Grade

COMPANY	(USOC)	Monthly Rate		(USOC)	Nonrecurring Charge
ADAK (AEE)	_____	$241.50		_____	None
ATC	_____	284.68		_____	None
BETTLES	_____	284.68		_____	None
BBTC	_____	241.50		_____	None
BUSH	_____	241.50		_____	None
CIRCLE*	_____	AVG		_____	AVG
NO.COUNTRY*	_____	AVG		_____	AVG
NETCI	_____	154.54		_____	None
OTZ	_____	338.10		_____	None
SUMMIT	_____	241.50		_____	None
UKUC	_____	230.98	(R)	_____	None
UUI	_____	230.98	(R)	_____	None
YTC	_____	172.86		_____	None

*Average Schedule Company: current NECA Tariff, FCC No. 5, rates apply.

RECEIVED
MAR 0 4 2011
STATE OF ALASKA
REGULATORY COMMISSION OF ALASKA

ACCESS SERVICES

13. Rates and Charges (Cont'd)

13.3 Special Access Service (Cont'd)

13.3.2 Voice Grade Service (Cont'd)

Regulations concerning Voice Grade are set forth in 7.4. preceding.

C. Optional Features And Functions (Cont'd)

6. Signaling Capability

a. Per Termination

COMPANY	(USOC)	Monthly Rate		(USOC)	Nonrecurring Charge
ADAK (AEE)	_____	$18.87		_____	None
ATC	_____	16.30		_____	None
BETTLES	_____	16.30		_____	None
BBTC	_____	18.87		_____	None
BUSH	_____	18.87		_____	None
CIRCLE*	_____	AVG		_____	AVG
NO.COUNTRY*	_____	AVG		_____	AVG
NETCI	_____	12.08		_____	None
OTZ	_____	26.42		_____	None
SUMMIT	_____	18.87		_____	None
UKUC	_____	18.33	(I)	_____	None
UUI	_____	18.33	(I)	_____	None
YTC	_____	13.51		_____	None

*Average Schedule Company: current NECA Tariff, FCC No. 5, rates apply.

RECEIVED

JUL 0 6 2010

STATE OF ALASKA
REGULATORY COMMISSION OF ALASKA

ACCESS SERVICES

13. Rates and Charges (Cont'd)

13.3 Special Access Service (Cont'd)

13.3.2 Voice Grade Service (Cont'd)

Regulations concerning Voice Grade are set forth in 7.4. preceding.

C. Optional Features And Functions (Cont'd)

6. Signaling Capability (Cont'd)

b. VG1 - Loop Start Either End

COMPANY	(USOC)	**Monthly Rate**	(USOC)	**Nonrecurring Charge**	
ADAK (AEE)	_____		_____		
ATC	_____		_____		
BETTLES	_____		_____		
BBTC	_____		_____		
BUSH	_____		_____		
CIRCLE*	_____		_____		
					(D)
NO.COUNTRY*	_____		_____		
NETCI	_____		_____		
OTZ	_____		_____		
SUMMIT	_____		_____		
UKUC	_____		_____		
UUI	_____		_____		
YTC	_____		_____		

*Average Schedule Company: current NECA Tariff, FCC No. 5, rates apply.

RECEIVED

JUL 0 6 2010

STATE OF ALASKA
REGULATORY COMMISSION OF ALASKA

ACCESS SERVICES

13. Rates and Charges (Cont'd)

13.3 Special Access Service (Cont'd)

13.3.2 Voice Grade Service (Cont'd)

Regulations concerning Voice Grade are set forth in 7.4. preceding.

C. Optional Features And Functions (Cont'd)

6. Signaling Capability (Cont'd)

c. VG1 - Ground Start Either End

COMPANY	(USOC)	**Monthly Rate**	(USOC)	**Nonrecurring Charge**	
ADAK (AEE)	_____		_____		
ATC	_____		_____		
BETTLES	_____		_____		
BBTC	_____		_____		
BUSH	_____		_____		
CIRCLE*	_____		_____		
					(D)
NO.COUNTRY*	_____		_____		
NETCI	_____		_____		
OTZ	_____		_____		
SUMMIT	_____		_____		
UKUC	_____		_____		
UUI	_____		_____		
YTC	_____		_____		

*Average Schedule Company: current NECA Tariff, FCC No. 5, rates apply.

RECEIVED

JUL 0 6 2010

STATE OF ALASKA
REGULATORY COMMISSION OF ALASKA

ACCESS SERVICES

13. Rates and Charges (Cont'd)

13.3 Special Access Service (Cont'd)

13.3.2 Voice Grade Service (Cont'd)

Regulations concerning Voice Grade are set forth in 7.4. preceding.

C. Optional Features And Functions (Cont'd)

6. Signaling Capability (Cont'd)

d. VG2 - Loop Start Closed End Only

COMPANY	(USOC)	Monthly Rate	(USOC)	Nonrecurring Charge	
ADAK (AEE)	_____		_____		
ATC	_____		_____		
BETTLES	_____		_____		
BBTC	_____		_____		
BUSH	_____		_____		
CIRCLE*	_____		_____		
					(D)
NO.COUNTRY*	_____		_____		
NETCI	_____		_____		
OTZ	_____		_____		
SUMMIT	_____		_____		
UKUC	_____		_____		
UUI	_____		_____		
YTC	_____		_____		

*Average Schedule Company: current NECA Tariff, FCC No. 5, rates apply.

RECEIVED

JUL 0 6 2010

STATE OF ALASKA
REGULATORY COMMISSION OF ALASKA

ACCESS SERVICES

13. Rates and Charges (Cont'd)

13.3 Special Access Service (Cont'd)

13.3.2 Voice Grade Service (Cont'd)

Regulations concerning Voice Grade are set forth in 7.4. preceding.

C. Optional Features And Functions (Cont'd)

6. Signaling Capability (Cont'd)

e. VG2 - Ground Start To Centrex Station Line Only

COMPANY	(USOC)	Monthly Rate	(USOC)	Nonrecurring Charge	
ADAK (AEE)	_____		_____		
ATC	_____		_____		
BETTLES	_____		_____		
BBTC	_____		_____		
BUSH	_____		_____		
CIRCLE*	_____		_____		
					(D)
NO.COUNTRY*	_____		_____		
NETCI	_____		_____		
OTZ	_____		_____		
SUMMIT	_____		_____		
UKUC	_____		_____		
UUI	_____		_____		
YTC	_____		_____		

*Average Schedule Company: current NECA Tariff, FCC No. 5, rates apply.

RECEIVED
JUL 0 6 2010
STATE OF ALASKA
REGULATORY COMMISSION OF ALASKA

ACCESS SERVICES

13. Rates and Charges (Cont'd)

13.3 Special Access Service (Cont'd)

13.3.2 Voice Grade Service (Cont'd)

Regulations concerning Voice Grade are set forth in 7.4. preceding.

C. Optional Features And Functions (Cont'd)

6. Signaling Capability (Cont'd)

f. VG2 - 20HZ Ringdown

COMPANY	(USOC)	Monthly Rate	(USOC)	Nonrecurring Charge	
ADAK (AEE)	_____		_____		
ATC	_____		_____		
BETTLES	_____		_____		
BBTC	_____		_____		
BUSH	_____		_____		
CIRCLE	_____		_____		
					(D)
NO.COUNTRY*	_____		_____		
NETCI	_____		_____		
OTZ	_____		_____		
SUMMIT	_____		_____		
UKUC	_____		_____		
UUI	_____		_____		
YTC	_____		_____		

*Average Schedule Company: current NECA Tariff, FCC No. 5, rates apply.

RECEIVED

JUL 0 6 2010

STATE OF ALASKA
REGULATORY COMMISSION OF ALASKA

ACCESS SERVICES

13. Rates and Charges (Cont'd)

13.3 Special Access Service (Cont'd)

13.3.2 Voice Grade Service (Cont'd)

Regulations concerning Voice Grade are set forth in 7.4. preceding.

C. Optional Features And Functions (Cont'd)

6. Signaling Capability (Cont'd)
VG3, VG7 - Loop Start

COMPANY	(USOC)	**Monthly Rate**	(USOC)	**Nonrecurring Charge**	
ADAK (AEE)	_____		_____		
ATC	_____		_____		
BETTLES	_____		_____		
BBTC	_____		_____		
BUSH	_____		_____		
CIRCLE*	_____		_____		(D)
NO.COUNTRY*	_____		_____		
NETCI	_____		_____		
OTZ	_____		_____		
SUMMIT	_____		_____		
UKUC	_____		_____		
UUI	_____		_____		
YTC	_____		_____		

*Average Schedule Company: current NECA Tariff, FCC No. 5, rates apply.

RECEIVED
JUL 0 6 2010
STATE OF ALASKA
REGULATORY COMMISSION OF ALASKA

ACCESS SERVICES

13. Rates and Charges (Cont'd)

13.3 Special Access Service (Cont'd)

13.3.2 Voice Grade Service (Cont'd)

Regulations concerning Voice Grade are set forth in 7.4. preceding.

C. Optional Features And Functions (Cont'd)

6. Signaling Capability (Cont'd)

h. VG3, VG7 - Ground Start

COMPANY	(USOC)	Monthly Rate	(USOC)	Nonrecurring Charge
ADAK (AEE)	_____		_____	
ATC	_____		_____	
BETTLES	_____		_____	
BBTC	_____		_____	
BUSH	_____		_____	
CIRCLE*	_____		_____	
				(D)
NO.COUNTRY*	_____		_____	
NETCI	_____		_____	
OTZ	_____		_____	
SUMMIT	_____		_____	
UKUC	_____		_____	
UUI	_____		_____	
YTC	_____		_____	

*Average Schedule Company: current NECA Tariff, FCC No. 5, rates apply.

RECEIVED

JUL 0 6 2010

STATE OF ALASKA
REGULATORY COMMISSION OF ALASKA

ACCESS SERVICES

13. Rates and Charges (Cont'd)

13.3 Special Access Service (Cont'd)

13.3.2 Voice Grade Service (Cont'd)

Regulations concerning Voice Grade are set forth in 7.4. preceding.

C. Optional Features And Functions (Cont'd)

6. Signaling Capability (Cont'd)

i. VG3, VG7 - E & M

COMPANY	(USOC)	Monthly Charge	(USOC)	Nonrecurring Rate
ADAK (AEE)	_____		_____	
ATC	_____		_____	
BETTLES	_____		_____	
BBTC	_____		_____	
BUSH	_____		_____	
CIRCLE*	_____		_____	
				(D)
NO.COUNTRY*	_____		_____	
NETCI	_____		_____	
OTZ	_____		_____	
SUMMIT	_____		_____	
UKUC	_____		_____	
UUI	_____		_____	
YTC	_____		_____	

*Average Schedule Company: current NECA Tariff, FCC No. 5, rates apply.

Issued: _____

Issued By: Alaska Exchange Carriers Association, Inc

By: Judith A. Colbert Title: Executive Director

RECEIVED

JUL 0 6 2010

STATE OF ALASKA
REGULATORY COMMISSION OF ALASKA

ACCESS SERVICES

13. Rates and Charges (Cont'd)

13.3 Special Access Service (Cont'd)

13.3.2 Voice Grade Service (Cont'd)

Regulations concerning Voice Grade are set forth in 7.4. preceding.

C. Optional Features And Functions (Cont'd)

6. Signaling Capability (Cont'd)

j. VG8, VG9 - Loop Start At Closed End

COMPANY	(USOC)	**Monthly Rate**	(USOC)	**Nonrecurring Charge**	
ADAK (AEE)	_____		_____		
ATC	_____		_____		
BETTLES	_____		_____		
BBTC	_____		_____		
BUSH	_____		_____		
CIRCLE*	_____		_____		
	_____		_____		(D)
NO.COUNTRY*	_____		_____		
NETCI	_____		_____		
OTZ	_____		_____		
SUMMIT	_____		_____		
UKUC	_____		_____		
UUI	_____		_____		
YTC	_____		_____		

*Average Schedule Company: current NECA Tariff, FCC No. 5, rates apply.

RECEIVED
JUL 0 6 2010
STATE OF ALASKA
REGULATORY COMMISSION OF ALASKA

ACCESS SERVICES

13. Rates and Charges (Cont'd)

13.3 Special Access Service (Cont'd)

13.3.2 Voice Grade Service (Cont'd)

Regulations concerning Voice Grade are set forth in 7.4. preceding.

C. Optional Features And Functions (Cont'd)

6. Signaling Capability (Cont'd)

k. VG8, VG9 - E & M, SF, DX At Open End

COMPANY	(USOC)	**Monthly Rate**	(USOC)	**Nonrecurring Charge**	
ADAK (AEE)	_____		_____		
ATC	_____		_____		
BETTLES	_____		_____		
BBTC	_____		_____		
BUSH	_____		_____		
CIRCLE*	_____		_____		
					(D)
NO.COUNTRY*	_____		_____		
NETCI	_____		_____		
OTZ	_____		_____		
SUMMIT	_____		_____		
UKUC	_____		_____		
UUI	_____		_____		
YTC	_____		_____		

*Average Schedule Company: current NECA Tariff, FCC No. 5, rates apply.

RECEIVED

JUL 0 6 2010

STATE OF ALASKA
REGULATORY COMMISSION OF ALASKA

ACCESS SERVICES

13. Rates and Charges (Cont'd)

13.3 Special Access Service (Cont'd)

13.3.2 Voice Grade Service (Cont'd)

Regulations concerning Voice Grade are set forth in 7.4. preceding.

C. Optional Features And Functions (Cont'd)

6. Signaling Capability (Cont'd)

l. VG8, VG9 - E & M, At Closed End

COMPANY	(USOC)	Monthly Rate	(USOC)	Nonrecurring Charge
ADAK (AEE)	_____		_____	
ATC	_____		_____	
BETTLES	_____		_____	
BBTC	_____		_____	
BUSH	_____		_____	
CIRCLE*	_____		_____	
NO.COUNTRY*	_____		_____	
NETCI	_____		_____	
OTZ	_____		_____	
SUMMIT	_____		_____	
UKUC	_____		_____	
UUI	_____		_____	
YTC	_____		_____	

(D)

*Average Schedule Company: current NECA Tariff, FCC No. 5, rates apply.

RECEIVED

MAR 0 4 2011

STATE OF ALASKA
REGULATORY COMMISSION OF ALASKA

ACCESS SERVICES

13. Rates and Charges (Cont'd)

13.3 Special Access Service (Cont'd)

13.3.2 Voice Grade Service (Cont'd)

Regulations concerning Voice Grade are set forth in 7.4. preceding.

C. Optional Features And Functions (Cont'd)

7. Selective Signaling Arrangement, Per Arrangement

COMPANY	(USOC)	Monthly Rate		(USOC)	Nonrecurring Charge
ADAK (AEE)	_____	$6.94		_____	None
ATC	_____	8.18		_____	None
BETTLES	_____	8.18		_____	None
BBTC	_____	6.94		_____	None
BUSH	_____	6.94		_____	None
CIRCLE*	_____	AVG		_____	AVG
NO.COUNTRY*	_____	AVG		_____	AVG
NETCI	_____	4.44		_____	None
OTZ	_____	9.72		_____	None
SUMMIT	_____	6.94		_____	None
UKUC	_____	6.64	(R)	_____	None
UUI	_____	6.64	(R)	_____	None
YTC	_____	4.97		_____	None

*Average Schedule Company: current NECA Tariff, FCC No. 5, rates apply.

RECEIVED

JUL 0 6 2010

STATE OF ALASKA
REGULATORY COMMISSION OF ALASKA

ACCESS SERVICES

13. Rates and Charges (Cont'd)

13.3 Special Access Service (Cont'd)

13.3.2 Voice Grade Service (Cont'd)

C. Optional Features And Functions (Cont'd)

8. Transfer Arrangement (Cont'd)
(Key Activated Or Dial Up***)**
Per four port arrangement, including
control channel termination
(See Note 1)

COMPANY	(USOC)	Monthly Rate	(USOC)	Nonrecurring Charge
ADAK (AEE)	_____	$3.34	_____	None
ATC	_____	3.94	_____	None
BETTLES	_____	3.94	_____	None
BBTC	_____	3.34	_____	None
BUSH	_____	3.34	_____	None
CIRCLE*	_____	AVG	_____	AVG

(D)

*Average Schedule Company: current NECA Tariff, FCC No. 5, rates apply.

**The key activated control channel is rated as a Voice Grade Channel Termination and Channel Mileage, if applicable.

***The Dial-Up option requires the customer to purchase the Controller Arrangement.

Note 1: An additional Channel Termination Charge will apply whenever a spare channel is configured as a leg to the customer designated premises. Additional channel mileage charges will also apply when the transfer arrangement is not located in the customer designated premises serving wire center.

RECEIVED
MAR 0 4 2011
STATE OF ALASKA
REGULATORY COMMISSION OF ALASKA

ACCESS SERVICES

13. Rates and Charges (Cont'd)

13.3 Special Access Service (Cont'd)

13.3.2 Voice Grade Service (Cont'd)

C. Optional Features And Functions (Cont'd)

8. Transfer Arrangement (Cont'd)
(Key Activated Or Dial Up***)**
- Per four port arrangement, including control channel termination
(See Note 1)

COMPANY	(USOC)	Monthly Rate		(USOC)	Nonrecurring Charge
NO.COUNTRY*	_____	AVG		_____	AVG
NETCI	_____	2.14		_____	None
OTZ	_____	4.68		_____	None
SUMMIT	_____	3.34		_____	None
UKUC	_____	3.19	(R)	_____	None
UUI	_____	3.19	(R)	_____	None
YTC	_____	2.39		_____	None

*Average Schedule Company: current NECA Tariff, FCC No. 5, rates apply.

**The key activated control channel is rated as a Voice Grade Channel Termination and Channel Mileage, if applicable.

***The Dial-Up option requires the customer to purchase the Controller Arrangement.

Note 1: An additional Channel Termination Charge will apply whenever a spare channel is configured as a leg to the customer-designated premises. Additional channel mileage charges will also apply when the transfer arrangement is not located in the customer-designated premises serving wire center.

RECEIVED

JUL 0 6 2010

STATE OF ALASKA
REGULATORY COMMISSION OF ALASKA

ACCESS SERVICES

13. Rates and Charges (Cont'd)

13.3 Special Access Service (Cont'd)

13.3.2 Voice Grade Service (Cont'd)
Optional Features And Functions (Cont'd)

8. Transfer Arrangement (Cont'd)
(Key Activated Or Dial Up***)**
- Per five port arrangement, including control channel termination
(See Note 1)

COMPANY	(USOC)	Monthly Rate	(USOC)	Nonrecurring Charge
ADAK (AEE)	_____	$3.34	_____	None
ATC	_____	9.00	_____	None
BETTLES	_____	9.00	_____	None
BBTC	_____	3.34	_____	None
BUSH	_____	3.34	_____	None
CIRCLE*	_____	AVG	_____	AVG

(D)

*Average Schedule Company: current NECA Tariff, FCC No. 5, rates apply.

**The key activated control channel is rated as a Voice Grade Channel Termination and Channel Mileage, if applicable.

***The Dial-Up option requires the customer to purchase the Controller Arrangement.

Note 1: An additional Channel Termination Charge will apply whenever a spare channel is configured as a leg to the customer designated premises. Additional channel mileage charges will also apply when the transfer arrangement is not located in the customer designated premises serving wire center.

RECEIVED
MAR 0 4 2011
STATE OF ALASKA
REGULATORY COMMISSION OF ALASKA

ACCESS SERVICES

13. Rates and Charges (Cont'd)

13.3 Special Access Service (Cont'd)

13.3.2 Voice Grade Service (Cont'd)

C. Optional Features And Functions (Cont'd)

8. Transfer Arrangement (Cont'd)
(Key Activated Or Dial Up***)**
- Per five port arrangement, including control channel termination
(See Note 1)

Monthly COMPANY	(USOC)	Rate		(USOC)	Nonrecurring Charge
NO.COUNTRY*	_____	AVG		_____	AVG
NETCI	_____	2.14		_____	None
OTZ	_____	4.68		_____	None
SUMMIT	_____	7.63		_____	None
UKUC	_____	7.30	(R)	_____	None
UUI	_____	7.30	(R)	_____	None
YTC	_____	2.39		_____	None

*Average Schedule Company: current NECA Tariff, FCC No. 5, rates apply.
**The key activated control channel is rated as a Voice Grade Channel Termination and Channel Mileage, if applicable.
***The Dial-Up option requires the customer to purchase the Controller Arrangement.
Note 1: An additional Channel Termination Charge will apply whenever a spare channel is configured as a leg to the customer-designated premises. Additional channel mileage charges will also apply when the transfer arrangement is not located in the customer-designated premises serving wire center.

RECEIVED

JUL 0 6 2010

STATE OF ALASKA
REGULATORY COMMISSION OF ALASKA

ACCESS SERVICES

13. Rates and Charges (Cont'd)

13.3 Special Access Service (Cont'd)

13.3.2 Voice Grade Service (Cont'd)

C. Optional Features And Functions (Cont'd)

9. Public Packet Switching Network (PPSN) Interface Arrangement, Per Arrangement

COMPANY	(USOC)	**Monthly Rate**	(USOC)	**Nonrecurring Charge**	
ADAK (AEE)	_____	ICB	_____	ICB	
ATC	_____	ICB	_____	None	
BETTLES	_____	ICB	_____	None	
BBTC	_____	ICB	_____	None	
BUSH	_____	ICB	_____	None	
CIRCLE*	_____	AVG	_____	AVG	(D)
NO.COUNTRY*	_____	AVG	_____	AVG	
NETCI	_____	ICB	_____	None	
OTZ	_____	ICB	_____	None	
SUMMIT	_____	ICB	_____	ICB	
UKUC	_____	ICB	_____	None	
UUI	_____	ICB	_____	None	
YTC	_____	ICB	_____	None	

*Average Schedule Company: current NECA Tariff, FCC No. 5, rates apply.

RECEIVED

MAR 0 4 2011

STATE OF ALASKA
REGULATORY COMMISSION OF ALASKA

ACCESS SERVICES

13. Rates and Charges (Cont'd)

13.3 Special Access Service (Cont'd)

13.3.3 Digital Data Service

Regulations concerning Digital Data Service are set forth in 7.7 preceding.

A. Channel Termination
Per Termination - 2.4 Kbps

COMPANY	(USOC)	Monthly Rate		(USOC)	Nonrecurring Charge	
ADAK (AEE)	_____	$91.47		_____	$390.00	
ATC	_____	101.39		_____	353.00	
BETTLES	_____	101.39		_____	353.00	
BBTC	_____	91.47		_____	390.00	
BUSH	_____	91.47		_____	390.00	
CIRCLE*	_____	AVG		_____	AVG	
NO.COUNTRY*	_____	AVG		_____	AVG	
NETCI	_____	58.53		_____	390.00	
OTZ	_____	128.06		_____	390.00	
SUMMIT	_____	91.47		_____	390.00	
UKUC	_____	117.00	(I)	_____	518.00	(I)
UUI	_____	66.00	(R)	_____	292.00	(R)
YTC	_____	65.47		_____	390.00	

*Average Schedule Company: current NECA Tariff, FCC No. 5, rates apply.

RECEIVED
MAR 0 4 2011
STATE OF ALASKA
REGULATORY COMMISSION OF ALASKA

ACCESS SERVICES

13. Rates and Charges (Cont'd)

13.3 Special Access Service (Cont'd)

13.3.3 Digital Data Service (Cont'd)

Regulations concerning Digital Data Service are set forth in 7.5. preceding.

A. Channel Termination
Per Termination - 4.8 Kbps

COMPANY	(USOC)	Monthly Rate		(USOC)	Nonrecurring Charge	
ADAK (AEE)	_____	$91.47		_____	$390.00	
ATC	_____	101.39		_____	353.00	
BETTLES	_____	101.39		_____	353.00	
BBTC	_____	91.47		_____	390.00	
BUSH	_____	91.47		_____	390.00	
CIRCLE*	_____	AVG		_____	AVG	
NO.COUNTRY*	_____	AVG		_____	AVG	
NETCI	_____	58.53		_____	390.00	
OTZ	_____	128.06		_____	390.00	
SUMMIT	_____	91.47		_____	390.00	
UKUC	_____	117.00	(I)	_____	518.00	(I)
UUI	_____	66.00	(R)	_____	292.00	(R)
YTC	_____	65.47		_____	390.00	

*Average Schedule Company: current NECA Tariff, FCC No. 5, rates apply.

RECEIVED
MAR 0 4 2011
STATE OF ALASKA
REGULATORY COMMISSION OF ALASKA

ACCESS SERVICES

13. Rates and Charges (Cont'd)

13.3 Special Access Service (Cont'd)

13.3.3 Digital Data Service (Cont'd)

Regulations concerning Digital Data Service are set forth in 7.7 preceding.

A. Channel Termination
Per Termination - 9.6 Kbps

COMPANY	(USOC)	Monthly Rate		(USOC)	Nonrecurring Charge	
ADAK (AEE)	_____	$91.47		_____	$390.00	
ATC	_____	101.39		_____	353.00	
BETTLES	_____	101.39		_____	353.00	
BBTC	_____	91.47		_____	390.00	
BUSH	_____	91.47		_____	390.00	
CIRCLE*	_____	AVG		_____	AVG	
NO.COUNTRY*	_____	AVG		_____	AVG	
NETCI	_____	58.53		_____	390.00	
OTZ	_____	128.06		_____	390.00	
SUMMIT	_____	91.47		_____	390.00	
UKUC	_____	117.00	(I)	_____	518.00	(I)
UUI	_____	66.00	(R)	_____	292.00	(R)
YTC	_____	65.47		_____	390.00	

*Average Schedule Company: current NECA Tariff, FCC No. 5, rates apply.

RECEIVED

MAR 0 4 2011

STATE OF ALASKA
REGULATORY COMMISSION OF ALASKA

ACCESS SERVICES

13. Rates and Charges (Cont'd)

13.3 Special Access Service (Cont'd)

13.3.3 Digital Data Service (Cont'd)

Regulations concerning Digital Data Service areset forth in 7.7 preceding.

A. Channel Termination
Per Termination - 19.2 Kbps

COMPANY	(USOC)	Monthly Rate		(USOC)	Nonrecurring Charge	
ADAK (AEE)	_____	$91.47		_____	$390.00	
ATC	_____	101.39		_____	353.00	
BETTLES	_____	101.39		_____	353.00	
BBTC	_____	91.47		_____	390.00	
BUSH	_____	91.47		_____	390.00	
CIRCLE*	_____	AVG		_____	AVG	
NO.COUNTRY*	_____	AVG		_____	AVG	
NETCI	_____	58.53		_____	390.00	
OTZ	_____	128.06		_____	390.00	
SUMMIT	_____	91.47		_____	390.00	
UKUC	_____	117.00	(I)	_____	518.00	(I)
UUI	_____	66.00	(R)	_____	292.00	(R)
YTC	_____	65.47		_____	390.00	

*Average Schedule Company: current NECA Tariff, FCC No. 5, rates apply.

RECEIVED
MAR 0 4 2011
STATE OF ALASKA
REGULATORY COMMISSION OF ALASKA

ACCESS SERVICES

13. Rates and Charges (Cont'd)

13.3 Special Access Service (Cont'd)

13.3.3 Digital Data Service (Cont'd)

Regulations concerning Digital Data Service are set forth in 7.7 preceding.

A. Channel Termination
Per Termination - 56.0 Kbps

COMPANY	(USOC)	Monthly Rate		(USOC)	Nonrecurring Charge	
ADAK (AEE)	_____	$91.47		_____	$390.00	
ATC	_____	101.39		_____	353.00	
BETTLES	_____	101.39		_____	353.00	
BBTC	_____	91.47		_____	390.00	
BUSH	_____	91.47		_____	390.00	
CIRCLE*	_____	AVG		_____	AVG	
N.COUNTRY*	_____	AVG		_____	AVG	
NETCI	_____	58.53		_____	390.00	
OTZ	_____	128.06		_____	390.00	
SUMMIT	_____	91.47		_____	390.00	
UKUC	_____	117.00	(I)	_____	518.00	(I)
UUI	_____	66.00	(R)	_____	292.00	(R)
YTC	_____	65.47		_____	390.00	

*Average Schedule Company: current NECA Tariff, FCC No. 5, rates apply.

RECEIVED
MAR 0 4 2011
STATE OF ALASKA
REGULATORY COMMISSION OF ALASKA

ACCESS SERVICES

13. Rates and Charges (Cont'd)

13.3 Special Access Service (Cont'd)

13.3.3 Digital Data Service (Cont'd)

Regulations concerning Digital Data Service are set forth in 7.7 preceding.

A. Channel Termination
Per Termination - 64.0 Kbps

COMPANY	(USOC)	Monthly Rate		(USOC)	Nonrecurring Charge	
ADAK (AEE)	_____	$91.47		_____	$390.00	
ATC	_____	101.39		_____	353.00	
BETTLES	_____	101.39		_____	353.00	
BBTC	_____	91.47		_____	390.00	
BUSH	_____	91.47		_____	390.00	
CIRCLE*	_____	AVG		_____	AVG	
N.COUNTRY*	_____	AVG		_____	AVG	
NETCI	_____	58.53		_____	390.00	
OTZ	_____	128.06		_____	390.00	
SUMMIT	_____	91.47		_____	390.00	
UKUC	_____	117.00	(I)	_____	518.00	(I)
UUI	_____	66.00	(R)	_____	292.00	(R)
YTC	_____	65.47		_____	390.00	

*Average Schedule Company: current NECA Tariff, FCC No. 5, rates apply.

RECEIVED
MAR 0 4 2011
STATE OF ALASKA
REGULATORY COMMISSION OF ALASKA

ACCESS SERVICES

13. Rates and Charges (Cont'd)

13.3 Special Access Service (Cont'd)

13.3.3 Digital Data Service (Cont'd)

Regulations concerning Digital Data Service are set forth in 7.7 preceding.

B. Channel Mileage

1. Channel Mileage Facility

Per Mile - 2.4 Kbps

COMPANY	(USOC)	Monthly Rate		(USOC)	Nonrecurring Charge
ADAK (AEE)	_____	$3.36		_____	None
ATC	_____	None		_____	None
BETTLES	_____	None		_____	None
BBTC	_____	None		_____	None
BUSH	_____	None		_____	None
CIRCLE*	_____	AVG		_____	AVG
NO.COUNTRY*	_____	AVG		_____	AVG
NETCI	_____	None		_____	None
OTZ	_____	None		_____	None
SUMMIT	_____	ICB		_____	None
UKUC	_____	4.00		_____	None
UUI	_____	2.00	(R)	_____	None
YTC	_____	None		_____	None

*Average Schedule Company: current NECA Tariff, FCC No. 5, rates apply.

RECEIVED

MAR 0 4 2011

STATE OF ALASKA
REGULATORY COMMISSION OF ALASKA

ACCESS SERVICES

13. Rates and Charges (Cont'd)

13.3 Special Access Service (Cont'd)

13.3.3 Digital Data Service (Cont'd)

Regulations concerning Digital Data Service are set forth in 7.7 preceding.

B. Channel Mileage (Cont')

1. Channel Mileage Facility

Per Mile - 4.8 Kbps

COMPANY	(USOC)	Monthly Rate		(USOC)	Nonrecurring Charge
ADAK (AEE)	_____	$3.36		_____	None
ATC	_____	None		_____	None
BETTLES	_____	None		_____	None
BBTC	_____	None		_____	None
BUSH	_____	None		_____	None
CIRCLE*	_____	AVG		_____	AVG
NO.COUNTRY*	_____	AVG		_____	AVG
NETCI	_____	None		_____	None
OTZ	_____	None		_____	None
SUMMIT	_____	ICB		_____	None
UKUC	_____	4.00		_____	None
UUI	_____	2.00	(R)	_____	None
YTC	_____	None		_____	None

*Average Schedule Company: current NECA Tariff, FCC No. 5, rates apply.

RECEIVED
MAR 0 4 2011
STATE OF ALASKA
REGULATORY COMMISSION OF ALASKA

ACCESS SERVICES

13. Rates and Charges (Cont'd)

13.3 Special Access Service (Cont'd)

13.3.3 Digital Data Service (Cont'd)

Regulations concerning Digital Data Service are set forth in 7.7 preceding.

B. Channel Mileage (Cont')

1. Channel Mileage Facility

Per Mile - 9.6 Kbps

COMPANY	(USOC)	Monthly Rate		(USOC)	Nonrecurring Charge
ADAK (AEE)	_____	$3.36		_____	None
ATC	_____	None		_____	None
BETTLES	_____	None		_____	None
BBTC	_____	None		_____	None
BUSH	_____	None		_____	None
CIRCLE*	_____	AVG		_____	AVG
NO.COUNTRY*	_____	AVG		_____	AVG
NETCI	_____	None		_____	None
OTZ	_____	None		_____	None
SUMMIT	_____	ICB		_____	None
UKUC	_____	4.00		_____	None
UUI	_____	2.00	(R)	_____	None
YTC	_____	None		_____	None

*Average Schedule Company: current NECA Tariff, FCC No. 5, rates apply.

Issued: _____
Issued By: Alaska Exchange Carriers Association, Inc.
By: Judith A. Colbert Judith A. Colbert Title: Executive Director

RECEIVED
MAR 0 4 2011
STATE OF ALASKA
REGULATORY COMMISSION OF ALASKA

ACCESS SERVICES

13. Rates and Charges (Cont'd)

13.3 Special Access Service (Cont'd)

13.3.3 Digital Data Service (Cont'd)

Regulations concerning Digital Data Service are set forth in 7.7 preceding.

B. Channel Mileage (Cont')

1. Channel Mileage Facility

Per Mile - 19.2 Kbps

COMPANY	(USOC)	Monthly Rate		(USOC)	Nonrecurring Charge
ADAK (AEE)	_____	$3.36		_____	None
ATC	_____	None		_____	None
BETTLES	_____	None		_____	None
BBTC	_____	None		_____	None
BUSH	_____	None		_____	None
CIRCLE*	_____	AVG		_____	AVG
NO.COUNTRY*	_____	AVG		_____	AVG
NETCI	_____	None		_____	None
OTZ	_____	None		_____	None
SUMMIT	_____	ICB		_____	None
UKUC	_____	4.00		_____	None
UUI	_____	2.00	(R)	_____	None
YTC	_____	None		_____	None

*Average Schedule Company: current NECA Tariff, FCC No. 5, rates apply.

RECEIVED
MAR 0 4 2011
STATE OF ALASKA
REGULATORY COMMISSION OF ALASKA

ACCESS SERVICES

13. Rates and Charges (Cont'd)

13.3 Special Access Service (Cont'd)

13.3.3 Digital Data Service (Cont'd)

Regulations concerning Digital Data Service are set forth in 7.7 preceding.

B. Channel Mileage (Cont')

1. Channel Mileage Facility
Per Mile - 56.0 Kbps

COMPANY	(USOC)	Monthly Rate		(USOC)	Nonrecurring Charge
ADAK (AEE)	_____	$4.76		_____	None
ATC	_____	None		_____	None
BETTLES	_____	None		_____	None
BBTC	_____	None		_____	None
BUSH	_____	None		_____	None
CIRCLE*	_____	AVG		_____	AVG
NO.COUNTRY*	_____	AVG		_____	AVG
NETCI	_____	None		_____	None
OTZ	_____	None		_____	None
SUMMIT	_____	ICB		_____	None
UKUC	_____	6.00	(I)	_____	None
UUI	_____	3.00	(R)	_____	None
YTC	_____	None		_____	None

*Average Schedule Company: current NECA Tariff, FCC No. 5, rates apply.

RECEIVED
MAR 0 4 2011
STATE OF ALASKA
REGULATORY COMMISSION OF ALASKA

ACCESS SERVICES

13. Rates and Charges (Cont'd)

13.3 Special Access Service (Cont'd)

13.3.3 Digital Data Service (Cont'd)

Regulations concerning Digital Data Service are set forth in 7.7 preceding.

B. Channel Mileage (Cont'd)

1. Channel Mileage Facility

Per Mile - 64.0 Kbps

COMPANY	(USOC)	Monthly Rate		(USOC)	Nonrecurring Charge
ADAK (AEE)	_____	$4.76		_____	None
ATC	_____	None		_____	None
BETTLES	_____	None		_____	None
BBTC	_____	None		_____	None
BUSH	_____	None		_____	None
CIRCLE*	_____	AVG		_____	AVG
NO.COUNTRY*	_____	AVG		_____	AVG
NETCI	_____	None		_____	None
OTZ	_____	None		_____	None
SUMMIT	_____	ICB		_____	None
UKUC	_____	6.00	(I)	_____	None
UUI	_____	3.00	(R)	_____	None
YTC	_____	None		_____	None

*Average Schedule Company: current NECA Tariff, FCC No. 5, rates apply.

Issued: _____
Issued By: Alaska Exchange Carriers Association, Inc
By: Judith A. Colbert Judith A. Colbert Title: Executive Director

RECEIVED
MAR 0 4 2011
STATE OF ALASKA
REGULATORY COMMISSION OF ALASKA

ACCESS SERVICES

13. Rates and Charges (Cont'd)

13.3 Special Access Service (Cont'd)

13.3.3 Digital Data Service (Cont'd)

Regulations concerning Digital Data Service are set forth in 7.7 preceding.

B. Channel Mileage (Cont'd)

2. Channel Mileage Termination

Per Termination - 2.4 Kbps

COMPANY	(USOC)	Monthly Rate		(USOC)	Nonrecurring Charge
ADAK (AEE)	_____	$33.70		_____	None
ATC	_____	None		_____	None
BETTLES	_____	None		_____	None
BBTC	_____	None		_____	None
BUSH	_____	None		_____	None
CIRCLE*	_____	AVG		_____	AVG
NO.COUNTRY*	_____	AVG		_____	AVG
NETCI	_____	None		_____	None
OTZ	_____	None		_____	None
SUMMIT	_____	ICB		_____	None
UKUC	_____	43.00	(I)	_____	None
UUI	_____	24.00	(R)	_____	None
YTC	_____	None		_____	None

*Average Schedule Company: current NECA Tariff, FCC No. 5, rates apply.

RECEIVED
MAR 0 4 2011
STATE OF ALASKA
REGULATORY COMMISSION OF ALASKA

ACCESS SERVICES

13. Rates and Charges (Cont'd)

13.3 Special Access Service (Cont'd)

13.3.3 Digital Data Service (Cont'd)

Regulations concerning Digital Data Service are set forth in 7.7 preceding.

B. Channel Mileage (Cont'd)

2. Channel Mileage Termination

Per Termination - 4.8 Kbps

COMPANY	(USOC)	Monthly Rate		(USOC)	Nonrecurring Charge
ADAK (AEE)	_____	$33.70		_____	None
ATC	_____	None		_____	None
BETTLES	_____	None		_____	None
BBTC	_____	None		_____	None
BUSH	_____	None		_____	None
CIRCLE*	_____	AVG		_____	AVG
NO.COUNTRY*	_____	AVG		_____	AVG
NETCI	_____	None		_____	None
OTZ	_____	None		_____	None
SUMMIT	_____	ICB		_____	None
UKUC	_____	43.00	(I)	_____	None
UUI	_____	24.00	(R)	_____	None
YTC	_____	None		_____	None

*Average Schedule Company: current NECA Tariff, FCC No. 5, rates apply.

RECEIVED
MAR 0 4 2011
STATE OF ALASKA
REGULATORY COMMISSION OF ALASKA

ACCESS SERVICES

13. Rates and Charges (Cont'd)

13.3 Special Access Service (Cont'd)

13.3.3 Digital Data Service (Cont'd)

Regulations concerning Digital Data Service are set forth in 7.7 preceding.

B. Channel Mileage (Cont'd)

2. Channel Mileage Termination

Per Termination - 9.6 Kbps

COMPANY	(USOC)	Monthly Rate		(USOC)	Nonrecurring Charge
ADAK (AEE)	_____	$33.70		_____	None
ATC	_____	None		_____	None
BETTLES	_____	None		_____	None
BBTC	_____	None		_____	None
BUSH	_____	None		_____	None
CIRCLE*	_____	AVG		_____	AVG
NO.COUNTRY*	_____	AVG		_____	AVG
NETCI	_____	None		_____	None
OTZ	_____	None		_____	None
SUMMIT	_____	ICB		_____	None
UKUC	_____	43.00	(I)	_____	None
UUI	_____	24.00	(R)	_____	None
YTC	_____	None		_____	None

*Average Schedule Company: current NECA Tariff, FCC No. 5, rates apply.

RECEIVED
MAR 0 4 2011
STATE OF ALASKA
REGULATORY COMMISSION OF ALASKA

ACCESS SERVICES

13. Rates and Charges (Cont'd)

13.3 Special Access Service (Cont'd)

13.3.3 Digital Data Service (Cont'd)

Regulations concerning Digital Data Service are set forth in 7.7 preceding.

B. Channel Mileage (Cont'd)

2. Channel Mileage Termination

Per Termination - 19.2 Kbps

COMPANY	(USOC)	Monthly Rate		(USOC)	Nonrecurring Charge
ADAK (AEE)	_____	$33.70		_____	None
ATC	_____	None		_____	None
BETTLES	_____	None		_____	None
BBTC	_____	None		_____	None
BUSH	_____	None		_____	None
CIRCLE*	_____	AVG		_____	AVG
NO.COUNTRY*	_____	AVG		_____	AVG
NETCI	_____	None		_____	None
OTZ	_____	None		_____	None
SUMMIT	_____	ICB		_____	None
UKUC	_____	43.00	(I)	_____	None
UUI	_____	24.00	(R)	_____	None
YTC	_____	None		_____	None

*Average Schedule Company: current NECA Tariff, FCC No. 5, rates apply.

RECEIVED
MAR 0 4 2011
STATE OF ALASKA
REGULATORY COMMISSION OF ALASKA

ACCESS SERVICES

13. Rates and Charges (Cont'd)

13.3 Special Access Service (Cont'd)

13.3.3 Digital Data Service (Cont'd)

Regulations concerning Digital Data Service are set forth in 7.7 preceding.

B. Channel Mileage (Cont'd)

2. Channel Mileage Termination
Per Termination - 56.0 Kbps

COMPANY	(USOC)	Monthly Rate		(USOC)	Nonrecurring Charge
ADAK (AEE)	_____	$47.76		_____	None
ATC	_____	None		_____	None
BETTLES	_____	None		_____	None
BBTC	_____	None		_____	None
BUSH	_____	None		_____	None
CIRCLE*	_____	AVG		_____	AVG
NO.COUNTRY*	_____	AVG		_____	AVG
NETCI	_____	None		_____	None
OTZ	_____	None		_____	None
SUMMIT	_____	ICB		_____	None
UKUC	_____	61.00	(I)	_____	None
UUI	_____	34.00	(R)	_____	None
YTC	_____	None		_____	None

*Average Schedule Company: current NECA Tariff, FCC No. 5, rates apply.

RECEIVED
MAR 0 4 2011
STATE OF ALASKA
REGULATORY COMMISSION OF ALASKA

ACCESS SERVICES

13. Rates and Charges (Cont'd)

13.3 Special Access Service (Cont'd)

13.3.3 Digital Data Service (Cont'd)

Regulations concerning Digital Data Service are set forth in 7.7 preceding.

B. Channel Mileage (Cont'd)

2. Channel Mileage Termination

Per Termination - 64.0 Kbps

COMPANY	(USOC)	Monthly Rate		(USOC)	Nonrecurring Charge
ADAK (AEE)	_____	$47.76		_____	None
ATC	_____	None		_____	None
BETTLES	_____	None		_____	None
BBTC	_____	None		_____	None
BUSH	_____	None		_____	None
CIRCLE*	_____	AVG		_____	AVG
NO.COUNTRY*	_____	AVG		_____	AVG
NETCI	_____	None		_____	None
OTZ	_____	None		_____	None
SUMMIT	_____	ICB		_____	None
UKUC	_____	61.00	(I)	_____	None
UUI	_____	34.00	(R)	_____	None
YTC	_____	None		_____	None

*Average Schedule Company: current NECA Tariff, FCC No. 5, rates apply.

RECEIVED

MAR 0 4 2011

STATE OF ALASKA
REGULATORY COMMISSION OF ALASKA

ACCESS SERVICES

13. Rates and Charges (Cont'd)

13.3 Special Access Service (Cont'd)

13.3.3 Digital Data Service (Cont'd)

Regulations concerning Digital Data Service are set forth in 7.7 preceding.

C. Optional Features And Functions

1. Bridging, Per Port

COMPANY	(USOC)	Monthly Rate		(USOC)	Nonrecurring Charge
ADAK (AEE)	_____	$8.39		_____	None
ATC	_____	9.89		_____	None
BETTLES	_____	9.89		_____	None
BBTC	_____	8.39		_____	None
BUSH	_____	8.39		_____	None
CIRCLE*	_____	AVG		_____	AVG
NO.COUNTRY*	_____	AVG		_____	AVG
NETCI	_____	5.37		_____	None
OTZ	_____	11.75		_____	None
SUMMIT	_____	8.39		_____	None
UKUC	_____	8.02	(R)	_____	None
UUI	_____	8.02	(R)	_____	None
YTC	_____	6.01		_____	None

*Average Schedule Company: current NECA Tariff, FCC No. 5, rates apply.

RECEIVED

MAR 0 4 2011

STATE OF ALASKA
REGULATORY COMMISSION OF ALASKA

ACCESS SERVICES

13. Rates and Charges (Cont'd)

13.3 Special Access Service (Cont'd)

13.3.3 Digital Data Service (Cont'd)

Regulations concerning Digital Data Service are set forth in 7.7 preceding.

C. Optional Features And Functions (Cont'd)

2. Loop Transfer Arrangement

(Key Activated Or Dial Up***)**
Per four port arrangement (See Note 1)

COMPANY	(USOC)	Monthly Rate		(USOC)	Nonrecurring Charge
ADAK (AEE)	_____	$6.64		_____	None
ATC	_____	7.83		_____	None
BETTLES	_____	7.83		_____	None
BBTC	_____	6.64		_____	None
BUSH	_____	6.64		_____	None
CIRCLE*	_____	AVG		_____	AVG
NO.COUNTRY*	_____	AVG		_____	AVG
NETCI	_____	4.25		_____	None
OTZ	_____	9.30		_____	None
SUMMIT	_____	6.64		_____	None
UKUC	_____	6.35	(R)	_____	None
UUI	_____	6.35	(R)	_____	None
YTC	_____	4.75		_____	None

*Average Schedule Company: current NECA Tariff, FCC 5, rates apply.
**The key activated control channel is rated as a Voice Grade Channel Termination and Channel Mileage, if applicable.
***The Dial-Up option requires the customer to purchase the Controller Arrangement.

Note 1: An additional Channel Termination Charge will apply whenever a spare channel is configured as a leg to the customer designated premises. Additional channel mileage charges will also apply when the transfer arrangement is not located in the customer designated premises serving wire center.

RECEIVED
JUL 0 6 2010
STATE OF ALASKA
REGULATORY COMMISSION OF ALASKA

ACCESS SERVICES

13. Rates and Charges (Cont'd)

13.3 Special Access Service (Cont'd)

13.3.3 Digital Data Service (Cont'd)

Regulations concerning Digital Data Service are set forth in 7.7 preceding.

C. Optional Features And Functions (Cont'd)

3. Public Packet Switching Network

Interface Arrangement - 9.6 Kbps

COMPANY	(USOC)	**Monthly Rate**	(USOC)	**Nonrecurring Charge**	
ADAK (AEE)	_____	ICB	_____	ICB	(D)
ATC	_____	ICB	_____	ICB	
BETTLES	_____	ICB	_____	ICB	
BBTC	_____	ICB	_____	None	
BUSH	_____	ICB	_____	None	
CIRCLE*	_____	AVG	_____	AVG	(D)
NO.COUNTRY*	_____	AVG	_____	AVG	
NETCI	_____	ICB	_____	None	
OTZ	_____	ICB	_____	None	
SUMMIT	_____	ICB	_____	ICB	
UKUC	_____	ICB	_____	None	
UUI	_____	ICB	_____	None	
YTC	_____	ICB	_____	None	

*Average Schedule Company: current NECA Tariff, FCC No. 5, rates apply.

RECEIVED

JUL 0 6 2010

STATE OF ALASKA
REGULATORY COMMISSION OF ALASKA

ACCESS SERVICES

13. Rates and Charges (Cont'd)

13.3 Special Access Service (Cont'd)

13.3.3 Digital Data Service (Cont'd)

Regulations concerning Digital Data Service are set forth in 7.7 preceding.

C. Optional Features And Functions (Cont'd)

3. Public Packet Switching Network

Interface Arrangement - 56.0 Kbps

COMPANY	(USOC)	**Monthly Rate**	(USOC)	**Nonrecurring Charge**	
ADAK (AEE)	_____	ICB	_____	ICB	
ATC	_____	ICB	_____	None	
BETTLES	_____	ICB	_____	None	
BBTC	_____	ICB	_____	None	
BUSH	_____	ICB	_____	None	
CIRCLE*	_____	AVG	_____	AVG	
					(D)
NO.COUNTRY*	_____	AVG	_____	AVG	
NETCI	_____	ICB	_____	None	
OTZ	_____	ICB	_____	None	
SUMMIT	_____	ICB	_____	ICB	
UKUC	_____	ICB	_____	None	
UUI	_____	ICB	_____	None	
YTC	_____	ICB	_____	None	

*Average Schedule Company: current NECA Tariff, FCC No. 5, rates apply.

RECEIVED

MAR 0 4 2011

STATE OF ALASKA
REGULATORY COMMISSION OF ALASKA

ACCESS SERVICES

13. Rates and Charges (Cont'd)

13.3 Special Access Service (Cont'd)

13.3.3 Digital Data Service (Cont'd)

Regulations concerning Digital Data Service are set forth in 7.7 preceding.

D. Channel Service Unit

Per Termination - 2.4 kbps

COMPANY	(USOC)	Monthly Rate		(USOC)	Nonrecurring Charge
ADAK (AEE)	_____	$33.16		_____	None
ATC	_____	39.09		_____	None
BETTLES	_____	39.09		_____	None
BBTC	_____	33.16		_____	None
BUSH	_____	33.16		_____	None
CIRCLE*	_____	AVG		_____	AVG
NO.COUNTRY*	_____	AVG		_____	AVG
NETCI	_____	21.22		_____	None
OTZ	_____	46.42		_____	None
SUMMIT	_____	33.16		_____	None
UKUC	_____	31.72	(R)	_____	None
UUI	_____	31.72	(R)	_____	None
YTC	_____	21.22		_____	None

*Average Schedule Company: current NECA Tariff, FCC No. 5, rates apply.

RECEIVED
MAR 0 4 2011
STATE OF ALASKA
REGULATORY COMMISSION OF ALASKA

ACCESS SERVICES

13. Rates and Charges (Cont'd)

13.3 Special Access Service (Cont'd)

13.3.3 Digital Data Service (Cont'd)

Regulations concerning Digital Data Service are set forth in 7.7 preceding.

D. Channel Service Unit

Per Termination - 4.8 kbps

COMPANY	(USOC)	Monthly Rate		(USOC)	Nonrecurring Charge
ADAK (AEE)	_____	$33.16		_____	None
ATC	_____	39.09		_____	None
BETTLES	_____	39.09		_____	None
BBTC	_____	33.16		_____	None
BUSH	_____	33.16		_____	None
CIRCLE*	_____	AVG		_____	AVG
NO.COUNTRY*	_____	AVG		_____	AVG
NETCI	_____	21.22		_____	None
OTZ	_____	46.42		_____	None
SUMMIT	_____	33.16		_____	None
UKUC	_____	31.72	(R)	_____	None
UUI	_____	31.72	(R)	_____	None
YTC	_____	21.22		_____	None

*Average Schedule Company: current NECA Tariff, FCC No. 5, rates apply.

RECEIVED

MAR 0 4 2011

STATE OF ALASKA
REGULATORY COMMISSION OF ALASKA

ACCESS SERVICES

13. Rates and Charges (Cont'd)

13.3 Special Access Service (Cont'd)

13.3.3 Digital Data Service (Cont'd)

Regulations concerning Digital Data Service are set forth in 7.7 preceding.

D. Channel Service Unit

Per Termination - 9.6 kbps

COMPANY	(USOC)	Monthly Rate		(USOC)	Nonrecurring Charge
ADAK (AEE)	_____	$33.16		_____	None
ATC	_____	39.09		_____	None
BETTLES	_____	39.09		_____	None
BBTC	_____	33.16		_____	None
BUSH	_____	33.16		_____	None
CIRCLE*	_____	AVG		_____	AVG
NO.COUNTRY*	_____	AVG		_____	AVG
NETCI	_____	21.22		_____	None
OTZ	_____	46.42		_____	None
SUMMIT	_____	33.16		_____	None
UKUC	_____	31.72	(R)	_____	None
UUI	_____	31.72	(R)	_____	None
YTC	_____	23.73		_____	None

*Average Schedule Company: current NECA Tariff, FCC No. 5, rates apply.

RECEIVED

MAR 0 4 2011

STATE OF ALASKA
REGULATORY COMMISSION OF ALASKA

ACCESS SERVICES

13. Rates and Charges (Cont'd)

13.3 Special Access Service (Cont'd)

13.3.3 Digital Data Service (Cont'd)

Regulations concerning Digital Data Service are set forth in 7.7 preceding.

D. Channel Service Unit

Per Termination - 56.0 kbps

COMPANY	(USOC)	Monthly Rate		(USOC)	Nonrecurring Charge
ADAK (AEE)	_____	$33.16		_____	None
ATC	_____	39.09		_____	None
BETTLES	_____	39.09		_____	None
BBTC	_____	33.16		_____	None
BUSH	_____	33.16		_____	None
CIRCLE*	_____	AVG		_____	AVG
NO.COUNTRY*	_____	AVG		_____	AVG
NETCI	_____	21.22		_____	None
OTZ	_____	46.42		_____	None
SUMMIT	_____	33.16		_____	None
UKUC	_____	31.72	(R)	_____	None
UUI	_____	31.72	(R)	_____	None
YTC	_____	23.73		_____	None

*Average Schedule Company: current NECA Tariff, FCC No. 5, rates apply.

RECEIVED

JAN -8 1999

State of Alaska
Public Utilities Commission

ACCESS SERVICES

13. Rates and Charges (Cont'd)

13.3 Special Access Service (Cont'd)

RESERVED FOR FUTURE USE (T)

RECEIVED
MAR 0 4 2011
STATE OF ALASKA
REGULATORY COMMISSION OF ALASKA

ACCESS SERVICES

13. Rates and Charges (Cont'd)

13.3 Special Access Service (Cont'd)

13.3.4 High Capacity Service

Regulations concerning High Capacity Service are set forth in 7.8 preceding.

A. Channel Termination Per Termination - 1.544 Mbps

COMPANY	(USOC)	Monthly Rate		(USOC)	Nonrecurring Charge	
ADAK (AEE)	_____	$4,248.90		_____	$330.00	
ATC	_____	287.50		_____	378.00	
BETTLES	_____	287.50		_____	378.00	
BBTC	_____	595.30		_____	330.00	
BUSH	_____	392.15		_____	330.00	
CIRCLE*	_____	AVG		_____	AVG	
NO.COUNTRY*	_____	AVG		_____	AVG	
NETCI	_____	156.07		_____	330.00	
OTZ	_____	341.45		_____	330.00	
SUMMIT	_____	243.89		_____	330.00	
UKUC	_____	310.00	(I)	_____	439.00	(I)
UUI	_____	174.00	(R)	_____	247.00	(R)
YTC	_____	174.57		_____	330.00	

*Average Schedule Company: current NECA Tariff, FCC No. 5, rates apply.

RECEIVED

JUL 0 6 2010

STATE OF ALASKA
REGULATORY COMMISSION OF ALASKA

ACCESS SERVICES

13. Rates and Charges (Cont'd)

13.3 Special Access Service (Cont'd)

13.3.4 High Capacity Service (Cont'd)

Regulations concerning High Capacity Service are set forth in 7.8 preceding.

A. Channel Termination

Per Termination - 3.152 Mbps

COMPANY	(USOC)	**Monthly Rate**	(USOC)	**Nonrecurring Charge**	
ADAK (AEE)	_____	ICB	_____	ICB	
ATC	_____	ICB	_____	ICB	
BETTLES	_____	ICB	_____	ICB	
BBTC	_____	ICB	_____	ICB	
BUSH	_____	ICB	_____	ICB	
CIRCLE*	_____	AVG	_____	AVG	
					(D)
NO.COUNTRY*	_____	AVG	_____	AVG	
NETCI	_____	ICB	_____	ICB	
OTZ	_____	ICB	_____	ICB	
SUMMIT	_____	ICB	_____	ICB	
UKUC	_____	ICB	_____	ICB	
UUI	_____	ICB	_____	ICB	
YTC	_____	ICB	_____	ICB	

*Average Schedule Company: current NECA Tariff, FCC No. 5, rates apply.

RECEIVED

JUL 0 6 2010

STATE OF ALASKA
REGULATORY COMMISSION OF ALASKA

ACCESS SERVICES

13. Rates and Charges (Cont'd)

13.3 Special Access Service (Cont'd)

13.3.4 High Capacity Service (Cont'd)

Regulations concerning High Capacity Service are set forth in 7.8 preceding.

A Channel Termination

Per Termination - 6.312 Mbps

COMPANY	(USOC)	**Monthly Rate**	(USOC)	**Nonrecurring Charge**	
ADAK (AEE)	_____	ICB	_____	AVG	
ATC	_____	ICB	_____	ICB	
BETTLES	_____	ICB	_____	ICB	
BBTC	_____	ICB	_____	ICB	
BUSH	_____	ICB	_____	ICB	
CIRCLE*	_____	AVG	_____	AVG	
					(D)
NO.COUNTRY*	_____	AVG	_____	AVG	
NETCI	_____	ICB	_____	ICB	
OTZ	_____	ICB	_____	ICB	
SUMMIT	_____	ICB	_____	ICB	
UKUC	_____	ICB	_____	ICB	
UUI	_____	ICB	_____	ICB	
YTC	_____	ICB	_____	ICB	

*Average Schedule Company: current NECA Tariff, FCC No. 5, rates apply.

Issued: _____
Issued By: Alaska Exchange Carriers Association, Inc
By: Judith A. Colbert Judith A. Colbert Title: Executive Director

RECEIVED

JUL 0 6 2010

STATE OF ALASKA
REGULATORY COMMISSION OF ALASKA

ACCESS SERVICES

13. Rates and Charges (Cont'd)

13.3 Special Access Service (Cont'd)

13.3.4 High Capacity Service (Cont'd)

Regulations concerning High Capacity Service are set forth in 7.8 preceding.

A. Channel Termination

Per Termination - 44.736 Mbps

COMPANY	(USOC)	Monthly Rate	(USOC)	Nonrecurring Charge	
ADAK (AEE)	_____	ICB	_____	ICB	
ATC	_____	ICB	_____	ICB	
BETTLES	_____	ICB	_____	ICB	
BBTC	_____	ICB	_____	ICB	
BUSH	_____	ICB	_____	ICB	
CIRCLE*	_____	AVG	_____	AVG	
					(D)
NO.COUNTRY*	_____	AVG	_____	AVG	
NETCI	_____	ICB	_____	ICB	
OTZ	_____	ICB	_____	ICB	
SUMMIT	_____	ICB	_____	ICB	
UKUC	_____	ICB	_____	ICB	
UUI	_____	ICB	_____	ICB	
YTC	_____	ICB	_____	ICB	

*Average Schedule Company: current NECA Tariff, FCC No. 5, rates apply.

RECEIVED

JUL 0 6 2010

STATE OF ALASKA
REGULATORY COMMISSION OF ALASKA

ACCESS SERVICES

13. Rates and Charges (Cont'd)

13.3 Special Access Service (Cont'd)

13.3.4 High Capacity Service (Cont'd)

Regulations concerning High Capacity Service are set forth in 7.8 preceding.

A. Channel Termination

Per Termination - 274.176 Mbps

COMPANY	(USOC)	**Monthly Rate**	(USOC)	**Nonrecurring Charge**	
ADAK (AEE)	_____	ICB	_____	ICB	
ATC	_____	ICB	_____	ICB	
BETTLES	_____	ICB	_____	ICB	
BBTC	_____	ICB	_____	ICB	
BUSH	_____	ICB	_____	ICB	
CIRCLE*	_____	AVG	_____	AVG	
					(D)
NO.COUNTRY*	_____	AVG	_____	AVG	
NETCI	_____	ICB	_____	ICB	
OTZ	_____	ICB	_____	ICB	
SUMMIT	_____	ICB	_____	ICB	
UKUC	_____	ICB	_____	ICB	
UUI	_____	ICB	_____	ICB	
YTC	_____	ICB	_____	ICB	

*Average Schedule Company: current NECA Tariff, FCC No. 5, rates apply.

RECEIVED

MAR 0 4 2011

STATE OF ALASKA
REGULATORY COMMISSION OF ALASKA

ACCESS SERVICES

13. Rates and Charges (Cont'd)

13.3 Special Access Service (Cont'd)

13.3.4 High Capacity Service (Cont'd)

Regulations concerning High Capacity Service are set forth in 7.8 preceding.

B. Channel Mileage

1. Facility Per Mile - 64.0 Kbps

COMPANY	(USOC)	Monthly Rate		(USOC)	Nonrecurring Charge
ADAK (AEE)	_____	$4.76		_____	None
ATC	_____	5.28		_____	None
BETTLES	_____	5.28		_____	None
BBTC	_____	4.76		_____	None
BUSH	_____	4.76		_____	None
CIRCLE*	_____	AVG		_____	AVG
NO.COUNTRY*	_____	AVG		_____	AVG
NETCI	_____	3.05		_____	None
OTZ	_____	6.66		_____	None
SUMMIT	_____	ICB		_____	ICB
UKUC	_____	6.00	(I)	_____	None
UUI	_____	3.00	(R)	_____	None
YTC	_____	3.41		_____	None

*Average Schedule Company: current NECA Tariff, FCC No. 5, rates apply.

RECEIVED
MAR 0 4 2011
STATE OF ALASKA
REGULATORY COMMISSION OF ALASKA

ACCESS SERVICES

13. Rates and Charges (Cont'd)

13.3 Special Access Service (Cont'd)

13.3.4 High Capacity Service (Cont'd)

Regulations concerning High Capacity Service are set forth in 7.8 preceding.

B. Channel Mileage

1. Facility Per Mile - 1.544 Mbps

COMPANY	(USOC)	Monthly Rate		(USOC)	Nonrecurring Charge
ADAK (AEE)	_____	$16.70		_____	None
ATC	_____	19.69		_____	None
BETTLES	_____	19.69		_____	None
BBTC	_____	16.70		_____	None
BUSH	_____	16.70		_____	None
CIRCLE*	_____	AVG		_____	AVG
NO.COUNTRY*	_____	AVG		_____	AVG
NETCI	_____	10.69		_____	None
OTZ	_____	23.38		_____	None
SUMMIT	_____	ICB		_____	ICB
UKUC	_____	21.00	(I)	_____	None
UUI	_____	12.00	(R)	_____	None
YTC	_____	11.95		_____	None

*Average Schedule Company: current NECA Tariff, FCC No. 5, rates apply.

RECEIVED

JUL 0 6 2010

STATE OF ALASKA
REGULATORY COMMISSION OF ALASKA

ACCESS SERVICES

13. Rates and Charges (Cont'd)

13.3 Special Access Service (Cont'd)

13.3.4 High Capacity Service (Cont'd)

Regulations concerning High Capacity Service are set forth in 7.8 preceding.

B. Channel Mileage (Cont')

1. Facility Per Mile - 3.152 Mbps

COMPANY	(USOC)	**Monthly Rate**	(USOC)	**Nonrecurring Charge**	
ADAK (AEE)	_____	ICB	_____	ICB	
ATC	_____	ICB	_____	None	
BETTLES	_____	ICB	_____	None	
BBTC	_____	ICB	_____	None	
BUSH	_____	ICB	_____	None	
CIRCLE*	_____	AVG	_____	AVG	(D)
NO.COUNTRY*	_____	AVG	_____	AVG	
NETCI	_____	ICB	_____	None	
OTZ	_____	ICB	_____	None	
SUMMIT	_____	ICB	_____	ICB	
UKUC	_____	ICB	_____	None	
UUI	_____	ICB	_____	None	
YTC	_____	ICB	_____	None	

*Average Schedule Company: current NECA Tariff, FCC No. 5, rates apply.

Issued: _____
Issued By: Alaska Exchange Carriers Association, Inc
By: Judith A. Colbert Judith A. Colbert Title: Executive Director

RECEIVED

JUL 0 6 2010

STATE OF ALASKA
REGULATORY COMMISSION OF ALASKA

ACCESS SERVICES

13. Rates and Charges (Cont'd)

13.3 Special Access Service (Cont'd)

13.3.4 High Capacity Service (Cont'd)

Regulations concerning High Capacity Service are set forth in 7.8 preceding.

B. Channel Mileage (Cont'd)

1. Facility Per Mile - 6.312 Mbps

COMPANY	(USOC)	**Monthly Rate**	(USOC)	**Nonrecurring Charge**	
ADAK (AEE)	_____	ICB	_____	ICB	
ATC	_____	ICB	_____	None	
BETTLES	_____	ICB	_____	None	
BBTC	_____	ICB	_____	None	
BUSH	_____	ICB	_____	None	
CIRCLE*	_____	AVG	_____	AVG	
					(D)
NO.COUNTRY*	_____	AVG	_____	AVG	
NETCI	_____	ICB	_____	None	
OTZ	_____	ICB	_____	None	
SUMMIT	_____	ICB	_____	ICB	
UKUC	_____	ICB	_____	None	
UUI	_____	ICB	_____	None	
YTC	_____	ICB	_____	None	

*Average Schedule Company: current NECA Tariff, FCC No. 5, rates apply.

RECEIVED

JUL 0 6 2010

STATE OF ALASKA
REGULATORY COMMISSION OF ALASKA

ACCESS SERVICES

13. Rates and Charges (Cont'd)

13.3 Special Access Service (Cont'd)

13.3.4 High Capacity Service (Cont'd)

Regulations concerning High Capacity Service are set forth in 7.8 preceding.

B. Channel Mileage (Cont'd)

1. Facility Per Mile - 44.736 Mbps

COMPANY	(USOC)	Monthly Rate	(USOC)	Nonrecurring Charge	
ADAK (AEE)	_____	$145.55	_____	None	
ATC	_____	171.58	_____	None	
BETTLES	_____	171.58	_____	None	
BBTC	_____	145.55	_____	None	
BUSH	_____	145.55	_____	None	
CIRCLE*	_____	AVG	_____	AVG	
NO.COUNTRY*	_____	AVG	_____	AVG	(D)
NETCI	_____	93.14	_____	None	
OTZ	_____	203.77	_____	None	
SUMMIT	_____	ICB	_____	ICB	
UKUC	_____	ICB	_____	None	
UUI	_____	ICB	_____	None	
YTC	_____	104.18	_____	None	

*Average Schedule Company: current NECA Tariff, FCC No. 5, rates apply.

RECEIVED
JUL 0 6 2010
STATE OF ALASKA
REGULATORY COMMISSION OF ALASKA

ACCESS SERVICES

13. Rates and Charges (Cont'd)

13.3 Special Access Service (Cont'd)

13.3.4 High Capacity Service (Cont'd)

Regulations concerning High Capacity Service are set forth in 7.8 preceding.

B. Channel Mileage (Cont'd)

1. Facility Per Mile - 274.176 Mbps

COMPANY	(USOC)	**Monthly Rate**	(USOC)	**Nonrecurring Charge**	
ADAK (AEE)	_____	ICB	_____	None	
ATC	_____	ICB	_____	None	
BETTLES	_____	ICB	_____	None	
BBTC	_____	ICB	_____	None	
BUSH	_____	ICB	_____	None	
CIRCLE*	_____	AVG	_____	AVG	
					(D)
NO.COUNTRY*	_____	AVG	_____	AVG	
NETCI	_____	ICB	_____	None	
OTZ	_____	ICB	_____	None	
SUMMIT	_____	ICB	_____	ICB	
UKUC	_____	ICB	_____	None	
UUI	_____	ICB	_____	None	
YTC	_____	ICB	_____	None	

*Average Schedule Company: current NECA Tariff, FCC No. 5, rates apply.

RECEIVED

MAR 0 4 2011

STATE OF ALASKA
REGULATORY COMMISSION OF ALASKA

ACCESS SERVICES

13. Rates and Charges (Cont'd)

13.3 Special Access Service (Cont'd)

13.3.4 High Capacity Service (Cont'd)

Regulations concerning High Capacity Service are set forth in 7.8 preceding.

B. Channel Mileage (Cont'd)

2. Per Termination - 64.0 Kbps

COMPANY	(USOC)	Monthly Rate		(USOC)	Nonrecurring Charge
ADAK (AEE)	_____	$47.76		_____	None
ATC	_____	52.94		_____	None
BETTLES	_____	52.94		_____	None
BBTC	_____	47.76		_____	None
BUSH	_____	47.76		_____	None
CIRCLE*	_____	AVG		_____	AVG
NO.COUNTRY*	_____	AVG		_____	AVG
NETCI	_____	30.56		_____	None
OTZ	_____	66.86		_____	None
SUMMIT	_____	47.76		_____	None
UKUC	_____	61.00	(I)	_____	None
UUI	_____	34.00	(R)	_____	None
YTC	_____	34.18		_____	None

*Average Schedule Company: current NECA Tariff, FCC No. 5, rates apply.

RECEIVED
MAR 0 4 2011
STATE OF ALASKA
REGULATORY COMMISSION OF ALASKA

ACCESS SERVICES

13. Rates and Charges (Cont'd)

13.3 Special Access Service (Cont'd)

13.3.4 High Capacity Service (Cont'd)

Regulations concerning Digital Service are set forth in 7.8. preceding.

B. Channel Mileage (Cont'd)

2. Per Termination - 1.544 Mbps

COMPANY	(USOC)	Monthly Rate		(USOC)	Nonrecurring Charge
ADAK (AEE)	_____	$86.69		_____	None
ATC	_____	102.19		_____	None
BETTLES	_____	102.19		_____	None
BBTC	_____	86.69		_____	None
BUSH	_____	86.69		_____	None
CIRCLE*	_____	AVG		_____	AVG
NO.COUNTRY*	_____	AVG		_____	AVG
NETCI	_____	55.48		_____	None
OTZ	_____	121.37		_____	None
SUMMIT	_____	86.69		_____	None
UKUC	_____	110.00	(I)	_____	None
UUI	_____	62.00	(R)	_____	None
YTC	_____	62.05		_____	None

*Average Schedule Company: current NECA Tariff, FCC No. 5, rates apply.

RECEIVED

JUL 0 6 2010

STATE OF ALASKA
REGULATORY COMMISSION OF ALASKA

ACCESS SERVICES

13. Rates and Charges (Cont'd)

13.3 Special Access Service (Cont'd)

13.3.4 High Capacity Service (Cont'd)

Regulations concerning High Capacity Service are set forth in 7.8 preceding.

B. Channel Mileage (Cont')

2. Per Termination - 3.152 Mbps

COMPANY	(USOC)	**Monthly Rate**	(USOC)	**Nonrecurring Charge**	
ADAK (AEE)	_____	ICB	_____	AVG	
ATC	_____	ICB	_____	None	
BETTLES	_____	ICB	_____	None	
BBTC	_____	ICB	_____	None	
BUSH	_____	ICB	_____	None	
CIRCLE*	_____	AVG	_____	AVG	
					(D)
NO.COUNTRY*	_____	AVG	_____	AVG	
NETCI	_____	ICB	_____	None	
OTZ	_____	ICB	_____	None	
SUMMIT	_____	ICB	_____	ICB	
UKUC	_____	ICB	_____	None	
UUI	_____	ICB	_____	None	
YTC	_____	ICB	_____	None	

*Average Schedule Company: current NECA Tariff, FCC No. 5, rates apply.

RECEIVED
JUL 0 6 2010
STATE OF ALASKA
REGULATORY COMMISSION OF ALASKA

ACCESS SERVICES

13. Rates and Charges (Cont'd)

13.3 Special Access Service (Cont'd)

13.3.4 High Capacity Service (Cont'd)

Regulations concerning High Capacity Service are set forth in 7.8 preceding.

B. Channel Mileage (Cont'd)

2. Per Termination - 6.312 Mbps

COMPANY	(USOC)	**Monthly Rate**	(USOC)	**Nonrecurring Charge**	
ADAK (AEE)	_____	ICB	_____	None	
ATC	_____	ICB	_____	None	
BETTLES	_____	ICB	_____	None	
BBTC	_____	ICB	_____	None	
BUSH	_____	ICB	_____	None	
CIRCLE*	_____	AVG	_____	AVG	
					(D)
NO.COUNTRY*	_____	AVG	_____	AVG	
NETCI	_____	ICB	_____	None	
OTZ	_____	ICB	_____	None	
SUMMIT	_____	ICB	_____	ICB	
UKUC	_____	ICB	_____	None	
UUI	_____	ICB	_____	None	
YTC	_____	ICB	_____	None	

*Average Schedule Company: current NECA Tariff, FCC No. 5, rates apply.

RECEIVED

JUL 0 6 2010

STATE OF ALASKA
REGULATORY COMMISSION OF ALASKA

13. Rates and Charges (Cont'd)

13.3 Special Access Service (Cont'd)

13.3.4 High Capacity Service (Cont'd)

Regulations concerning High Capacity Service are set forth in 7.8 preceding.

B. Channel Mileage (Cont'd)

2. Per Termination - 44.736 Mbps

COMPANY	(USOC)	**Monthly Rate**	(USOC)	**Nonrecurring Charge**
ADAK (AEE)	_____	$556.71	_____	None
ATC	_____	656.25	_____	None
BETTLES	_____	656.25	_____	None
BBTC	_____	556.71	_____	None
BUSH	_____	556.71	_____	None
CIRCLE*	_____	AVG	_____	AVG
NO.COUNTRY*	_____	AVG	_____	AVG
NETCI	_____	356.26	_____	None
OTZ	_____	779.39	_____	None
SUMMIT	_____	ICB	_____	ICB
UKUC	_____	ICB	_____	None
UUI	_____	ICB	_____	None
YTC	_____	398.47	_____	None

(D)

*Average Schedule Company: current NECA Tariff, FCC No. 5, rates apply.

RECEIVED

JUL 0 6 2010

STATE OF ALASKA
REGULATORY COMMISSION OF ALASKA

ACCESS SERVICES

13. Rates and Charges (Cont'd)

13.3 Special Access Service (Cont'd)

13.3.4 High Capacity Service (Cont'd)

Regulations concerning High Capacity Service are set forth in 7.8 preceding.

B. Channel Mileage (Cont'd)

2. Per Termination - 274.176 Mbps

COMPANY	(USOC)	**Monthly Rate**	(USOC)	**Nonrecurring Charge**	
ADAK (AEE)	_____	ICB	_____	None	
ATC	_____	ICB	_____	None	
BETTLES	_____	ICB	_____	None	
BBTC	_____	ICB	_____	ICB	
BUSH	_____	ICB	_____	None	
CIRCLE*	_____	AVG	_____	AVG	
					(D)
NO.COUNTRY*	_____	AVG	_____	AVG	
NETCI	_____	ICB	_____	None	
OTZ	_____	ICB	_____	None	
SUMMIT	_____	ICB	_____	ICB	
UKUC	_____	ICB	_____	None	
UUI	_____	ICB	_____	None	
YTC	_____	ICB	_____	None	

*Average Schedule Company: current NECA Tariff, FCC No. 5, rates apply.

RECEIVED

JUL 0 6 2010

STATE OF ALASKA
REGULATORY COMMISSION OF ALASKA

13. Rates and Charges (Cont'd)

13.3 Special Access Service (Cont'd)

13.3.4 High Capacity Service (Cont'd)

Regulations concerning Digital Service are set forth in 7.6. preceding.

C. Optional Features And Functions

1 Multiplexing Per Arrangement

a. DS4 to DS1

COMPANY	(USOC)	**Monthly Rate**	(USOC)	**Nonrecurring Charge**	
ADAK (AEE)	_____	ICB	_____	None	
ATC	_____	ICB	_____	None	
BETTLES	_____	ICB	_____	None	
BBTC	_____	ICB	_____	None	
BUSH	_____	ICB	_____	None	
CIRCLE*	_____	AVG	_____	AVG	
					(D)
NO.COUNTRY*	_____	AVG	_____	AVG	
NETCI	_____	ICB	_____	None	
OTZ	_____	ICB	_____	None	
SUMMIT	_____	ICB	_____	ICB	
UKUC	_____	ICB	_____	None	
UUI	_____	ICB	_____	None	
YTC	_____	ICB	_____	None	

*Average Schedule Company: current NECA Tariff, FCC No. 5, rates apply.

RECEIVED

MAR 0 4 2011

STATE OF ALASKA
REGULATORY COMMISSION OF ALASKA

ACCESS SERVICES

13. Rates and Charges (Cont'd)

13.3 Special Access Service (Cont'd)

13.3.4 High Capacity Service (Cont'd)

Regulations concerning High Capacity Service are set forth in 7.8 preceding.

C. Optional Features And Functions (Cont'd)

1. Multiplexing Per Arrangement (Cont'd)

b. DS3 to DS1

COMPANY	(USOC)	Monthly Rate		(USOC)	Nonrecurring Charge
ADAK (AEE)	_____	$506.42		_____	None
ATC	_____	596.96		_____	None
BETTLES	_____	596.96		_____	None
BBTC	_____	506.42		_____	ICB
BUSH	_____	506.42		_____	None
CIRCLE*	_____	AVG		_____	AVG
NO.COUNTRY*	_____	AVG		_____	AVG
NETCI	_____	324.07		_____	None
OTZ	_____	708.99		_____	None
SUMMIT	_____	506.42		_____	None
UKUC	_____	484.36	(R)	_____	None
UUI	_____	484.36	(R)	_____	None
YTC	_____	362.47		_____	None

*Average Schedule Company: current NECA Tariff, FCC No. 5, rates apply.

Issued: _____
Issued By: Alaska Exchange Carriers Association, Inc
By: Judith A. Colbert Judith A. Colbert Title: Executive Director

RECEIVED

JUL 0 6 2010

STATE OF ALASKA
REGULATORY COMMISSION OF ALASKA

ACCESS SERVICES

13. Rates and Charges (Cont'd)

13.3 Special Access Service (Cont'd)

13.3.4 High Capacity Service (Cont'd)

Regulations concerning High Capacity Service are set forth in 7.8 preceding.

C. Optional Features And Functions (Cont'd)

1. Multiplexing Per Arrangement (Cont'd)

c. DS2 to DS1

COMPANY	(USOC)	**Monthly Rate**	(USOC)	**Nonrecurring Charge**
ADAK (AEE)	_____	ICB	_____	None
ATC	_____	ICB	_____	None
BETTLES	_____	ICB	_____	None
BBTC	_____	ICB	_____	None
BUSH	_____	ICB	_____	None
CIRCLE*	_____	AVG	_____	AVG
NO.COUNTRY*	_____	AVG	_____	AVG
NETCI	_____	ICB	_____	None
OTZ	_____	ICB	_____	None
SUMMIT	_____	ICB	_____	ICB
UKUC	_____	ICB	_____	None
UUI	_____	ICB	_____	None
YTC	_____	ICB	_____	None

(D)

*Average Schedule Company: current NECA Tariff, FCC No. 5, rates apply.

RECEIVED

JUL 0 6 2010

STATE OF ALASKA
REGULATORY COMMISSION OF ALASKA

ACCESS SERVICES

13. Rates and Charges (Cont'd)

13.3 Special Access Service (Cont'd)

13.3.4 High Capacity Service (Cont'd)

Regulations concerning High Capacity Service are set forth in 7.8 preceding.

C. Optional Features And Functions (Cont'd)

1 Multiplexing Per Arrangement (Cont'd)

d. DS1C to DS1

COMPANY	(USOC)	**Monthly Rate**	(USOC)	**Nonrecurring Charge**	
ADAK (AEE)	_____	ICB	_____	None	
ATC	_____	ICB	_____	None	
BETTLES	_____	ICB	_____	None	
BBTC	_____	ICB	_____	None	
BUSII	_____	ICB	_____	None	
CIRCLE*	_____	AVG	_____	AVG	
					(D)
NO.COUNTRY*	_____	AVG	_____	AVG	
NETCI	_____	ICB	_____	None	
OTZ	_____	ICB	_____	None	
SUMMIT	_____	ICB	_____	ICB	
UKUC	_____	ICB	_____	None	
UUI	_____	ICB	_____	None	
YTC	_____	ICB	_____	None	

*Average Schedule Company: current NECA Tariff, FCC No. 5, rates apply.

RECEIVED
MAR 0 4 2011
STATE OF ALASKA
REGULATORY COMMISSION OF ALASKA

ACCESS SERVICES

13. Rates and Charges (Cont'd)

13.3 Special Access Service (Cont'd)

13.3.4 High Capacity Service (Cont'd)

Regulations concerning High Capacity Service are set forth in 7.8 preceding.

C. Optional Features And Functions (Cont'd)

1. Multiplexing Per Arrangement (Cont'd)

e. DS1 to Voice**

COMPANY	(USOC)	Monthly Rate		(USOC)	Nonrecurring Charge
ADAK (AEE)	_____	$195.52		_____	None
ATC	_____	230.48		_____	None
BETTLES	_____	230.48		_____	None
BBTC	_____	195.52		_____	None
BUSH	_____	195.52		_____	None
CIRCLE*	_____	AVG		_____	AVG
NO.COUNTRY*	_____	AVG		_____	AVG
NETCI	_____	125.12		_____	None
OTZ	_____	273.73		_____	None
SUMMIT	_____	195.52		_____	None
UKUC	_____	187.00	(R)	_____	None
UUI	_____	187.00	(R)	_____	None
YTC	_____	139.55		_____	None

*Average Schedule Company: current NECA Tariff, FCC No. 5, rates apply.

**A channel of this DS1 to the Hub can be used for Digital Data Service.

RECEIVED
MAR 0 4 2011
STATE OF ALASKA
REGULATORY COMMISSION OF ALASKA

ACCESS SERVICES

13. Rates and Charges (Cont'd)

13.3 Special Access Service (Cont'd)

13.3.4 High Capacity Service (Cont'd)

Regulations concerning High Capacity Service are set forth in 7.8 preceding.

C. Optional Features And Functions (Cont'd)

1. Multiplexing Per Arrangement (Cont'd)

f. DS1 to DS0

COMPANY	(USOC)	Monthly Rate		(USOC)	Nonrecurring Charge
ADAK (AEE)	_____	$195.52		_____	None
ATC	_____	230.48		_____	None
BETTLES	_____	230.48		_____	None
BBTC	_____	195.52		_____	None
BUSH	_____	195.52		_____	None
CIRCLE*	_____	AVG		_____	AVG
NO.COUNTRY*	_____	AVG		_____	AVG
NETCI	_____	125.12		_____	None
OTZ	_____	273.73		_____	None
SUMMIT	_____	195.52		_____	None
UKUC	_____	187.00	(R)	_____	None
UUI	_____	187.00	(R)	_____	None
YTC	_____	139.95		_____	None

*Average Schedule Company: current NECA Tariff, FCC No. 5, rates apply.

RECEIVED

MAR 0 4 2011

STATE OF ALASKA
REGULATORY COMMISSION OF ALASKA

ACCESS SERVICES

13. Rates and Charges (Cont'd)

13.3 Special Access Service (Cont'd)

13.3.4 High Capacity Service (Cont'd)

Regulations concerning High Capacity Service are set forth in 7.8 preceding.

C. Optional Features And Functions (Cont'd)

1. Multiplexing Per Arrangement (Cont'd)

g. DSO to Subrates

Up to 20 2.4 Kbps Services

COMPANY	(USOC)	Monthly Rate		(USOC)	Nonrecurring Charge
ADAK (AEE)	_____	$416.40		_____	None
ATC	_____	490.85		_____	None
BETTLES	_____	490.85		_____	None
BBTC	_____	416.40		_____	None
BUSH	_____	416.40		_____	None
CIRCLE*	_____	AVG		_____	AVG
NO.COUNTRY*	_____	AVG		_____	AVG
NETCI	_____	266.47		_____	None
OTZ	_____	582.96		_____	None
SUMMIT	_____	416.40		_____	None
UKUC	_____	398.26	(R)	_____	None
UUI	_____	398.26	(R)	_____	None
YTC	_____	298.04		_____	None

*Average Schedule Company: current NECA Tariff, FCC No. 5, rates apply.

RECEIVED

MAR 0 4 2011

STATE OF ALASKA
REGULATORY COMMISSION OF ALASKA

ACCESS SERVICES

13. Rates and Charges (Cont'd)

13.3 Special Access Service (Cont'd)

13.3.4 High Capacity Service (Cont'd)

Regulations concerning High Capacity Service are set forth in 7.8 preceding.

C. Optional Features And Functions (Cont'd)

1. Multiplexing Per Arrangement (Cont'd)

h. DS0 to Subrates

Up to 10 4.8 Kbps Services

COMPANY	(USOC)	Monthly Rate		(USOC)	Nonrecurring Charge
ADAK (AEE)	_____	$282.94		_____	None
ATC	_____	333.53		_____	None
BETTLES	_____	333.53		_____	None
BBTC	_____	282.94		_____	None
BUSH	_____	282.94		_____	None
CIRCLE*	_____	AVG		_____	AVG
NO.COUNTRY*	_____	AVG		_____	AVG
NETCI	_____	181.06		_____	None
OTZ	_____	396.12		_____	None
SUMMIT	_____	282.94		_____	None
UKUC	_____	270.62	(R)	_____	None
UUI	_____	270.62	(R)	_____	None
YTC	_____	181.06		_____	None

*Average Schedule Company: current NECA Tariff, FCC No. 5, rates apply.

RECEIVED

MAR 0 4 2011

STATE OF ALASKA
REGULATORY COMMISSION OF ALASKA

ACCESS SERVICES

13. Rates and Charges (Cont'd)

13.3 Special Access Service (Cont'd)

13.3.4 High Capacity Service (Cont'd)

Regulations concerning High Capacity Service are set forth in 7.8 preceding.

C. Optional Features And Functions (Cont'd)

1. Multiplexing Per Arrangement (Cont'd)

i. DS0 to Subrate

Up to 5 9.6 Kbps Services

COMPANY	(USOC)	Monthly Rate		(USOC)	Nonrecurring Charge
ADAK (AEE)	_____	$250.90		_____	None
ATC	_____	295.76		_____	None
BETTLES	_____	295.76		_____	None
BBTC	_____	250.90		_____	None
BUSH	_____	250.90		_____	None
CIRCLE*	_____	AVG		_____	AVG
NO.COUNTRY*	_____	AVG		_____	AVG
NETCI	_____	160.56		_____	None
OTZ	_____	351.26		_____	None
SUMMIT	_____	250.90		_____	None
UKUC	_____	239.97	(R)	_____	None
UUI	_____	239.97	(R)	_____	None
YTC	_____	179.58		_____	None

*Average Schedule Company: current NECA Tariff, FCC No. 5, rates apply.

RECEIVED

MAR 0 4 2011

STATE OF ALASKA
REGULATORY COMMISSION OF ALASKA

ACCESS SERVICES

13. Rates and Charges (Cont'd)

13.3 Special Access Service (Cont'd)

13.3.4 High Capacity Service (Cont'd)

Regulations concerning High Capacity Service are set forth in 7.8 preceding.

C. Optional Features And Functions (Cont'd)

2. Automatic Loop Transfer, Per Arrangement**

COMPANY	(USOC)	Monthly Rate		(USOC)	Nonrecurring Charge
ADAK (AEE)	_____	$168.69		_____	None
ATC	_____	198.85		_____	None
BETTLES	_____	198.85		_____	None
BBTC	_____	168.69		_____	None
BUSH	_____	168.69		_____	None
CIRCLE*	_____	AVG		_____	AVG
NO.COUNTRY*	_____	AVG		_____	AVG
NETCI	_____	107.95		_____	None
OTZ	_____	236.17		_____	None
SUMMIT	_____	168.69		_____	None
UKUC	_____	161.34	(R)	_____	None
UUI	_____	161.34	(R)	_____	None
YTC	_____	120.74		_____	None

*Average Schedule Company: current NECA Tariff, FCC No. 5, rates apply.

RECEIVED

JUL 0 6 2010

STATE OF ALASKA
REGULATORY COMMISSION OF ALASKA

ACCESS SERVICES

13. Rates and Charges (Cont'd)

13.3 Special Access Service (Cont'd)

13.3.4 High Capacity Service (Cont'd)

C. Optional Features And Functions (Cont'd)

3. Transfer Arrangement (Cont'd)

(Key Activated Or Dial Up***)**

Per four port arrangement, including control channel termination

(See Note 1)

COMPANY	(USOC)	**Monthly Rate**	(USOC)	**Nonrecurring Charge**
ADAK (AEE)	_____	$183.66	_____	None
ATC	_____	216.74	_____	None
BETTLES	_____	216.74	_____	None
BBTC	_____	183.66	_____	None
BUSH	_____	183.66	_____	None
CIRCLE*	_____	AVG	_____	AVG

*Average Schedule Company: current NECA Tariff, FCC No. 5, rates apply.
**The key activated control channel is rated as a Voice Grade Channel Termination and Channel Mileage, if applicable.
***The Dial-Up option requires the customer to purchase the Controller Arrangement.

Note 1: An additional Channel Termination Charge will apply whenever a spare channel is configured as a leg to the customer designated premises. Additional channel mileage charges will also apply when the transfer arrangement is not located in the customer designated premises serving wire center.

RECEIVED
MAR 0 4 2011
STATE OF ALASKA
REGULATORY COMMISSION OF ALASKA

ACCESS SERVICES

13. Rates and Charges (Cont'd)

13.3 Special Access Service (Cont'd)

13.3.4 High Capacity Service (Cont'd)

C. Optional Features And Functions (Cont'd)

3. Transfer Arrangement (Cont'd)

(Key Activated Or Dial Up***)**

Per four port arrangement, including

control channel termination

(See Note 1)

COMPANY	(USOC)	**Monthly Rate**		(USOC)	**Nonrecurring Charge**
NO.COUNTRY*	_____	AVG		_____	AVG
NETCI	_____	117.66		_____	None
OTZ	_____	257.40		_____	None
SUMMIT	_____	183.66		_____	None
UKUC	_____	175.85	(R)	_____	None
UUI	_____	175.85	(R)	_____	None
YTC	_____	131.60		_____	None

*Average Schedule Company: current NECA Tariff, FCC No. 5, rates apply.
**The key activated control channel is rated as a Voice Grade Channel Termination and Channel Mileage, if applicable.
***The Dial-Up option requires the customer to purchase the Controller Arrangement.

Note 1: An additional Channel Termination Charge will apply whenever a spare channel is configured as a leg to the customer-designated premises. Additional channel mileage charges will also apply when the transfer arrangement is not located in the customer-designated premises serving wire center.

RECEIVED

JUL 0 6 2010

STATE OF ALASKA
REGULATORY COMMISSION OF ALASKA

ACCESS SERVICES

13. Rates and Charges (Cont'd)

13.3 Special Access Service (Cont'd)

13.3.4 High Capacity Service (Cont'd)

C. Optional Features And Functions (Cont'd)

High Capacity Synchronization

COMPANY	(USOC)	Monthly Rate	(USOC)	Nonrecurring Charge
ADAK (AEE)	_____		_____	
ATC	_____		_____	
BETTLES	_____		_____	
BBTC	_____		_____	
BUSH	_____		_____	
CIRCLE*	_____		_____	
				(D)
NO.COUNTRY*	_____		_____	
NETCI	_____		_____	
OTZ	_____		_____	
SUMMIT	_____		_____	
UKUC	_____		_____	
UUI	_____		_____	
YTC	_____		_____	

*Average Schedule Company: current NECA Tariff, FCC No. 5, rates apply.

RECEIVED
MAR 0 4 2011
STATE OF ALASKA
REGULATORY COMMISSION OF ALASKA

ACCESS SERVICES

13. Rates and Charges (Cont'd)

13.3 Special Access Service (Cont'd)

13.3.4 High Capacity Service (Cont'd)

Regulations concerning High Capacity Service are set forth in 7.8 preceding.

D. Network Channel Terminating Equipment (NCTE),

Per Termination - 1.544 Mbps (Note 1)

COMPANY	(USOC)	Monthly Rate		(USOC)	Nonrecurring Charge
ADAK (AEE)	_____	$95.67		_____	None
ATC	_____	112.78		_____	None
BETTLES	_____	112.78		_____	None
BBTC	_____	95.67		_____	None
BUSH	_____	95.67		_____	None
CIRCLE*	_____	AVG		_____	AVG
NO.COUNTRY*	_____	AVG		_____	AVG
NETCI	_____	61.22		_____	None
OTZ	_____	133.94		_____	None
SUMMIT	_____	95.67		_____	None
UKUC	_____	91.50	(R)	_____	None
UUI	_____	91.50	(R)	_____	None
YTC	_____	68.48		_____	None

*Average Schedule Company: current NECA Tariff, FCC No. 5, rates apply.

Note 1: NCTE will only be provided under tariff if they existed in the Telephone Company's inventory as of November 18, 1983.

RECEIVED

MAR 0 4 2011

STATE OF ALASKA
REGULATORY COMMISSION OF ALASKA

ACCESS SERVICES

13. Rates and Charges (Cont'd)

13.3 Special Access Service (Cont'd)

13.3.4 High Capacity Service (Cont'd)

Regulations concerning High Capactiy Service are set forth in 7.8 preceding.

D. Network Channel Terminating Equipment (NCTE),

Per Termination - Automatic Loop Transfer (Note 1)

COMPANY	(USOC)	Monthly Rate		(USOC)	Nonrecurring Charge
ADAK (AEE)	_____	$384.37		_____	None
ATC	_____	453.09		_____	None
BETTLES	_____	453.09		_____	None
BBTC	_____	384.37		_____	None
BUSH	_____	384.37		_____	None
CIRCLE*	_____	AVG		_____	AVG
NO.COUNTRY*	_____	AVG		_____	AVG
NETCI	_____	245.97		_____	None
OTZ	_____	538.12		_____	None
SUMMIT	_____	384.37		_____	None
UKUC	_____	367.63	(R)	_____	None
UUI	_____	367.63	(R)	_____	None
YTC	_____	275.12		_____	None

*Average Schedule Company: current NECA Tariff, FCC No. 5, rates apply.

Note 1: NCTE will only be provided under tariff if they existed in the Telephone Company's inventory as of November 18, 1983.

RECEIVED
JUL 0 6 2010
STATE OF ALASKA
REGULATORY COMMISSION OF ALASKA

ACCESS SERVICES

13. Rates and Charges (Cont'd)

13.4 Other Services

13.4.1 Public Packet Data Network

A. Frame Relay Access Service

Regulations concerning Frame Relay Access Service are set forth in Section 12 preceding.

1. Connections - End User Port (Per Port)

COMPANY	(USOC)	**56.0 kbps Monthly Rate**	(USOC)	**Nonrecurring Charge**	
ADAK (AEE)	_____		_____		
ATC	_____		_____		
BETTLES	_____		_____		
BBTC	_____		_____		
BUSH	_____		_____		
CIRCLE*	_____		_____		
					(D)
NO.COUNTRY*	_____		_____		
NETCI	_____		_____		
OTZ	_____		_____		
SUMMIT	_____		_____		
UKUC	_____		_____		
UUI	_____		_____		
YTC	_____		_____		

*Average Schedule Company: current NECA Tariff, FCC No. 5, rates apply.

RECEIVED

JUL 0 6 2010

STATE OF ALASKA
REGULATORY COMMISSION OF ALASKA

ACCESS SERVICES

13. Rates and Charges (Cont'd)

13.4 Other Services

13.4.1 Public Packet Data Network

A. Frame Relay Access Service

Regulations concerning Frame Relay Access Service are set forth in Section 12 preceding.

1. Connections - End User Port (Per Port)

COMPANY	(USOC)	**64.0 kbps Monthly Rate**	(USOC)	**Nonrecurring Charge**
ADAK (AEE)	_____		_____	
ATC	_____		_____	
BETTLES	_____		_____	
BBTC	_____		_____	
BUSH	_____		_____	
CIRCLE*	_____		_____	(D)
NO.COUNTRY*	_____		_____	
NETCI	_____		_____	
OTZ	_____		_____	
SUMMIT	_____		_____	
UKUC	_____		_____	
UUI	_____		_____	
YTC	_____		_____	

*Average Schedule Company: current NECA Tariff, FCC No. 5, rates apply.

RECEIVED

JUL 0 6 2010

STATE OF ALASKA
REGULATORY COMMISSION OF ALASKA

ACCESS SERVICES

13. Rates and Charges (Cont'd)

13.4 Other Services

13.4.1 Public Packet Data Network

A. Frame Relay Access Service

Regulations concerning Frame Relay Access Service are set forth in Section 12 preceding.

1. Connections - End User Port (Per Port)

COMPANY	(USOC)	**1.544.0 Mbps Monthly Rate**	(USOC)	**Nonrecurring Charge**	
ADAK (AEE)	_____		_____		
ATC	_____		_____		
BETTLES	_____		_____		
BBTC	_____		_____		
BUSH	_____		_____		
CIRCLE*	_____		_____		
					(D)
NO.COUNTRY*	_____		_____		
NETCI	_____		_____		
OTZ	_____		_____		
SUMMIT	_____		_____		
UKUC	_____		_____		
UUI	_____		_____		
YTC	_____		_____		

*Average Schedule Company: current NECA Tariff, FCC No. 5, rates apply.

RECEIVED

JUL 0 6 2010

STATE OF ALASKA
REGULATORY COMMISSION OF ALASKA

ACCESS SERVICES

13. Rates and Charges (Cont'd)

13.4 Other Services

13.4.1 Public Packet Data Network

A. Frame Relay Access Service

Regulations concerning Frame Relay Access Service are set forth in Section 12 preceding.

2. Access Customer Port (Per Port)

COMPANY	(USOC)	**1.544.0 Mbps Monthly Rate**	(USOC)	**Nonrecurring Charge**	
ADAK (AEE)	_____		_____		
ATC	_____		_____		
BETTLES	_____		_____		
BBTC	_____		_____		
BUSH	_____		_____		
CIRCLE*	_____		_____		
					(D)
NO.COUNTRY*	_____		_____		
NETCI	_____		_____		
OTZ	_____		_____		
SUMMIT	_____		_____		
UKUC	_____		_____		
UUI	_____		_____		
YTC	_____		_____		

*Average Schedule Company: current NECA Tariff, FCC No. 5, rates apply.

Issued: _____
Issued By: Alaska Exchange Carriers Association, Inc
By: Judith A. Colbert Title: Executive Director

RECEIVED

JUL 0 6 2010

STATE OF ALASKA
REGULATORY COMMISSION OF ALASKA

ACCESS SERVICES

13. Rates and Charges (Cont'd)

13.4 Other Services

13.4.1 Public Packet Data Network

A. Frame Relay Access Service

Regulations concerning Frame Relay Access Service are set forth in Section 12 preceding.

3. Permanent Virtual Connections (PVC)

a. Standard – CIR

COMPANY	(USOC)	**8 kbps Monthly Rate**	(USOC)	**Nonrecurring Charge**
ADAK (AEE)	_____		_____	
ATC	_____		_____	
BETTLES	_____		_____	
BBTC	_____		_____	
BUSH	_____		_____	
CIRCLE*	_____		_____	
				(D)
NO.COUNTRY*	_____		_____	
NETCI	_____		_____	
OTZ	_____		_____	
SUMMIT	_____		_____	
UKUC	_____		_____	
UUI	_____		_____	
YTC	_____		_____	

*Average Schedule Company: current NECA Tariff, FCC No. 5, rates apply.

RECEIVED

JUL 0 6 2010

STATE OF ALASKA
REGULATORY COMMISSION OF ALASKA

ACCESS SERVICES

13. Rates and Charges (Cont'd)

13.4 Other Services

13.4.1 Public Packet Data Network

A. Frame Relay Access Service

Regulations concerning Frame Relay Access Service are set forth in Section 12 preceding.

3. Permanent Virtual Connections (PVC)

a. Standard – CIR

COMPANY	(USOC)	16 kbps Monthly Rate	(USOC)	Nonrecurring Charge
ADAK (AEE)	_____		_____	
ATC	_____		_____	
BETTLES	_____		_____	
BBTC	_____		_____	
BUSH	_____		_____	
CIRCLE*	_____		_____	
				(D)
NO.COUNTRY*	_____		_____	
NETCI	_____		_____	
OTZ	_____		_____	
SUMMIT	_____		_____	
UKUC	_____		_____	
UUI	_____		_____	
YTC	_____		_____	

*Average Schedule Company: current NECA Tariff, FCC No. 5, rates apply.

RECEIVED

JUL 0 6 2010

STATE OF ALASKA
REGULATORY COMMISSION OF ALASKA

ACCESS SERVICES

13. Rates and Charges (Cont'd)

13.4 Other Services

13.4.1 Public Packet Data Network

A. Frame Relay Access Service

Regulations concerning Frame Relay Access Service are set forth in Section 12 preceding.

3. Permanent Virtual Connections (PVC)

a. Standard – CIR

COMPANY	(USOC)	**28 kbps Monthly Rate**	(USOC)	**Nonrecurring Charge**	
ADAK (AEE)	_____		_____		
ATC	_____		_____		
BETTLES	_____		_____		
BBTC	_____		_____		
BUSH	_____		_____		
CIRCLE*	_____		_____		
					(D)
NO.COUNTRY*	_____		_____		
NETCI	_____		_____		
OTZ	_____		_____		
SUMMIT	_____		_____		
UKUC	_____		_____		
UUI	_____		_____		
YTC	_____		_____		

*Average Schedule Company: current NECA Tariff, FCC No. 5, rates apply.

RECEIVED

JUL 0 6 2010

STATE OF ALASKA
REGULATORY COMMISSION OF ALASKA

ACCESS SERVICES

13. Rates and Charges (Cont'd)

13.4 Other Services

13.4.1 Public Packet Data Network

A. Frame Relay Access Service

Regulations concerning Frame Relay Access Service are set forth in Section 12 preceding.

3. Permanent Virtual Connections (PVC)

a. Standard – CIR

COMPANY	(USOC)	**32 kbps Monthly Rate**	(USOC)	**Nonrecurring Charge**	
ADAK (AEE)	_____		_____		
ATC	_____		_____		
BETTLES	_____		_____		
BBTC	_____		_____		
BUSH	_____		_____		
CIRCLE*	_____		_____		
					(D)
NO.COUNTRY*	_____		_____		
NETCI	_____		_____		
OTZ	_____		_____		
SUMMIT	_____		_____		
UKUC	_____		_____		
UUI	_____		_____		
YTC	_____		_____		

*Average Schedule Company: current NECA Tariff, FCC No. 5, rates apply.

RECEIVED

JUL 0 6 2010

STATE OF ALASKA
REGULATORY COMMISSION OF ALASKA

ACCESS SERVICES

13. Rates and Charges (Cont'd)

13.4 Other Services

13.4.1 Public Packet Data Network

A. Frame Relay Access Service

Regulations concerning Frame Relay Access Service are set forth in Section 12 preceding.

3. Permanent Virtual Connections (PVC)

a. Standard – CIR

COMPANY	(USOC)	**56 kbps Monthly Rate**	(USOC)	**Nonrecurring Charge**	
ADAK (AEE)	_____		_____		
ATC	_____		_____		
BETTLES	_____		_____		
BBTC	_____		_____		
BUSH	_____		_____		
CIRCLE*	_____		_____		
					(D)
NO.COUNTRY*	_____		_____		
NETCI	_____		_____		
OTZ	_____		_____		
SUMMIT	_____		_____		
UKUC	_____		_____		
UUI	_____		_____		
YTC	_____		_____		

*Average Schedule Company: current NECA Tariff, FCC No. 5, rates apply.

RECEIVED

JUL 0 6 2010

STATE OF ALASKA
REGULATORY COMMISSION OF ALASKA

ACCESS SERVICES

13. Rates and Charges (Cont'd)

13.4 Other Services

13.4.1 Public Packet Data Network

A. Frame Relay Access Service

Regulations concerning Frame Relay Access Service are set forth in Section 12 preceding.

3. Permanent Virtual Connections (PVC)

a. Standard – CIR

COMPANY	(USOC)	**64 kbps Monthly Rate**	(USOC)	**Nonrecurring Charge**	
ADAK (AEE)	_____		_____		
ATC	_____		_____		
BETTLES	_____		_____		
BBTC	_____		_____		
BUSH	_____		_____		
CIRCLE*	_____		_____		
					(D)
NO.COUNTRY*	_____		_____		
NETCI	_____		_____		
OTZ	_____		_____		
SUMMIT	_____		_____		
UKUC	_____		_____		
UUI	_____		_____		
YTC	_____		_____		

*Average Schedule Company: current NECA Tariff, FCC No. 5, rates apply.

RECEIVED

JUL 0 6 2010

STATE OF ALASKA
REGULATORY COMMISSION OF ALASKA

ACCESS SERVICES

13. Rates and Charges (Cont'd)

13.4 Other Services

13.4.1 Public Packet Data Network

A. Frame Relay Access Service

Regulations concerning Frame Relay Access Service are set forth in Section 12 preceding.

3. Permanent Virtual Connections (PVC)

a. Standard – CIR

COMPANY	(USOC)	128 kbps Monthly Rate	(USOC)	Nonrecurring Charge
ADAK (AEE)	_____		_____	
ATC	_____		_____	
BETTLES	_____		_____	
BBTC	_____		_____	
BUSH	_____		_____	
CIRCLE*	_____		_____	
				(D)
NO.COUNTRY*	_____		_____	
NETCI	_____		_____	
OTZ	_____		_____	
SUMMIT	_____		_____	
UKUC	_____		_____	
UUI	_____		_____	
YTC	_____		_____	

*Average Schedule Company: current NECA Tariff, FCC No. 5, rates apply.

RECEIVED
JUL 0 6 2010
STATE OF ALASKA
REGULATORY COMMISSION OF ALASKA

ACCESS SERVICES

13. Rates and Charges (Cont'd)

13.4 Other Services

13.4.1 Public Packet Data Network

A. Frame Relay Access Service

Regulations concerning Frame Relay Access Service are set forth in Section 12 preceding.

3. Permanent Virtual Connections (PVC)

a. Standard – CIR

COMPANY	(USOC)	**192 kbps Monthly Rate**	(USOC)	**Nonrecurring Charge**	
ADAK (AEE)	_____		_____		
ATC	_____		_____		
BETTLES	_____		_____		
BBTC	_____		_____		
BUSH	_____		_____		
CIRCLE*	_____		_____		
					(D)
NO.COUNTRY*	_____		_____		
NETCI	_____		_____		
OTZ	_____		_____		
SUMMIT	_____		_____		
UKUC	_____		_____		
UUI	_____		_____		
YTC	_____		_____		

*Average Schedule Company: current NECA Tariff, FCC No. 5, rates apply.

RECEIVED
JUL 0 6 2010
STATE OF ALASKA
REGULATORY COMMISSION OF ALASKA

ACCESS SERVICES

13. Rates and Charges (Cont'd)

13.4 Other Services

13.4.1 Public Packet Data Network

A. Frame Relay Access Service

Regulations concerning Frame Relay Access Service are set forth in Section 12 preceding.

3. Permanent Virtual Connections (PVC)

a. Standard – CIR

COMPANY	(USOC)	**256 kbps Monthly Rate**	(USOC)	**Nonrecurring Charge**
ADAK (AEE)	_____		_____	
ATC	_____		_____	
BETTLES	_____		_____	
BBTC	_____		_____	
BUSH	_____		_____	
CIRCLE*	_____		_____	
				(D)
NO.COUNTRY*	_____		_____	
NETCI	_____		_____	
OTZ	_____		_____	
SUMMIT	_____		_____	
UKUC	_____		_____	
UUI	_____		_____	
YTC	_____		_____	

*Average Schedule Company: current NECA Tariff, FCC No. 5, rates apply.

RECEIVED

JUL 0 6 2010

STATE OF ALASKA
REGULATORY COMMISSION OF ALASKA

ACCESS SERVICES

13. Rates and Charges (Cont'd)

13.4 Other Services

13.4.1 Public Packet Data Network

A. Frame Relay Access Service

Regulations concerning Frame Relay Access Service are set forth in Section 12 preceding.

3. Permanent Virtual Connections (PVC)

a. Standard – CIR

COMPANY	(USOC)	384 kbps Monthly Rate	(USOC)	Nonrecurring Charge
ADAK (AEE)	_____		_____	
ATC	_____		_____	
BETTLES	_____		_____	
BBTC	_____		_____	
BUSH	_____		_____	
CIRCLE*	_____		_____	
				(D)
NO.COUNTRY*	_____		_____	
NETCI	_____		_____	
OTZ	_____		_____	
SUMMIT	_____		_____	
UKUC	_____		_____	
UUI	_____		_____	
YTC	_____		_____	

*Average Schedule Company: current NECA Tariff, FCC No. 5, rates apply.

RECEIVED

JUL 0 6 2010

STATE OF ALASKA
REGULATORY COMMISSION OF ALASKA

ACCESS SERVICES

13. Rates and Charges (Cont'd)

13.4 Other Services

13.4.1 Public Packet Data Network

A. Frame Relay Access Service

Regulations concerning Frame Relay Access Service are set forth in Section 12 preceding.

3. Permanent Virtual Connections (PVC)

a. Standard – CIR

COMPANY	(USOC)	512 kbps Monthly Rate	(USOC)	Nonrecurring Charge
ADAK (AEE)	_____		_____	
ATC	_____		_____	
BETTLES	_____		_____	
BBTC	_____		_____	
BUSH	_____		_____	
CIRCLE*	_____		_____	
				(D)
NO.COUNTRY*	_____		_____	
NETCI	_____		_____	
OTZ	_____		_____	
SUMMIT	_____		_____	
UKUC	_____		_____	
UUI	_____		_____	
YTC	_____		_____	

*Average Schedule Company: current NECA Tariff, FCC No. 5, rates apply.

RECEIVED

JUL 0 6 2010

STATE OF ALASKA
REGULATORY COMMISSION OF ALASKA

ACCESS SERVICES

13. Rates and Charges (Cont'd)

13.4 Other Services

13.4.1 Public Packet Data Network

A. Frame Relay Access Service

Regulations concerning Frame Relay Access Service are set forth in Section 12 preceding.

3. Permanent Virtual Connections (PVC)

a. Standard - CIR

COMPANY	(USOC)	**768 kbps Monthly Rate**	(USOC)	**Nonrecurring Charge**	
ADAK (AEE)	_____		_____		
ATC	_____		_____		
BETTLES	_____		_____		
BBTC	_____		_____		
BUSH	_____		_____		
CIRCLE*	_____		_____		
					(D)
NO.COUNTRY*	_____		_____		
NETCI	_____		_____		
OTZ	_____		_____		
SUMMIT	_____		_____		
UKUC	_____		_____		
UUI	_____		_____		
YTC	_____		_____		

*Average Schedule Company: current NECA Tariff, FCC No. 5, rates apply.

RECEIVED
December 6, 2024
STATE OF ALASKA
REGULATORY COMMISSION OF ALASKA

ACCESS SERVICES

Reserved for Future Use (T)

(D)

(D)

RECEIVED
December 6, 2024
STATE OF ALASKA
REGULATORY COMMISSION OF ALASKA

ACCESS SERVICES

Reserved for Future Use (T)

(D)

(D)

RECEIVED
December 6, 2024
STATE OF ALASKA
REGULATORY COMMISSION OF ALASKA

ACCESS SERVICES

Reserved for Future Use (T)

(D)

(D)

RECEIVED
December 6, 2024
STATE OF ALASKA
REGULATORY COMMISSION OF ALASKA

ACCESS SERVICES

Reserved for Future Use (T)

(D)

(D)

Issued: _____
Issued By: Alaska Exchange Carriers Association, Inc
By: Keegan Bernier Title: Executive Director

RECEIVED
December 6, 2024
STATE OF ALASKA
REGULATORY COMMISSION OF ALASKA

ACCESS SERVICES

Reserved for Future Use (T)

(D)

(D)

RECEIVED
December 6, 2024
STATE OF ALASKA
REGULATORY COMMISSION OF ALASKA

ACCESS SERVICES

Reserved for Future Use (T)

(D)

(D)

RECEIVED
December 6, 2024
STATE OF ALASKA
REGULATORY COMMISSION OF ALASKA

ACCESS SERVICES

Reserved for Future Use (T)

(D)

(D)

Issued: _____
Issued By: Alaska Exchange Carriers Association, Inc
By: Keegan Bernier Title: Executive Director

RECEIVED
December 6, 2024
STATE OF ALASKA
REGULATORY COMMISSION OF ALASKA

ACCESS SERVICES

Reserved for Future Use (T)

(D)

(D)

RECEIVED
December 6, 2024
STATE OF ALASKA
REGULATORY COMMISSION OF ALASKA

ACCESS SERVICES

Reserved for Future Use (T)

(D)

(D)

Issued: _____
Issued By: Alaska Exchange Carriers Association, Inc
By: Keegan Bernier Title: Executive Director

RECEIVED
December 6, 2024
STATE OF ALASKA
REGULATORY COMMISSION OF ALASKA

ACCESS SERVICES

Reserved for Future Use (T)

(D)

(D)

Issued: _____
Issued By: Alaska Exchange Carriers Association, Inc
By: Keegan Bernier Title: Executive Director

RECEIVED
December 6, 2024
STATE OF ALASKA
REGULATORY COMMISSION OF ALASKA

ACCESS SERVICES

Reserved for Future Use (T)

(D)

(D)

RECEIVED

JUN 2 7 2014

STATE OF ALASKA
REGULATORY COMMISSION OF ALASKA

ACCESS SERVICES

13. Rates and Charges (Cont'd)

13.5 Additional Engineering, Additional Labor and Miscellaneous Service

Regulations concerning Additional Engineering, Additional Labor and Miscellaneous Services are set forth in Section 9 preceding.

13.5.1 The charges for Additional Engineering are as follows:

A. Basic Time, normally scheduled working hours, per engineer

COMPANY	(USOC)	EACH HALF HOUR OR FRACTION THEREOF		
		Special Access	Switched Access Rate	
ADAK (AEE)	_____	$31.03	$31.03	
ATC	_____	27.19	31.03	
BETTLES	_____	27.19	31.03	
BBTC	_____	31.03	31.03	
BUSH	_____	31.03	31.03	
CIRCLE*	_____	AVG	31.03	
NO.COUNTRY*	_____	AVG	31.03	
NETCI	_____	31.03	31.03	
OTZ	_____	31.03	31.03	
SUMMIT	_____	38.50	31.03	
UKUC**	_____	31.03	31.03	(T)
UUI**	_____	31.03	31.03	(T)
YTC	_____	31.03	31.03	

Current National Exchange Carrier Association, Inc. Tariff F.C.C. No. 5 Rates and Rate Bands Apply
*Average Schedule Company : Current National Exchange Carrier Association, Inc. Tariff F.C.C. No. 5 Rates Apply (N)
**Current United Utilities, Inc. and United-KUC, Inc. Tariff F.C.C. No. 1 Rates Apply (N)

Issued: _____
Issued By: Alaska Exchange Carriers Association, Inc
By: Judith A. Colbert Judith A. Colbert Title: Executive Director

RECEIVED

JUN 27 2014

STATE OF ALASKA
REGULATORY COMMISSION OF ALASKA

ACCESS SERVICES

13. Rates and Charges (Cont'd)

13.5 Additional Engineering, Additional Labor and Miscellaneous Service (Cont'd)

Regulations concerning Additional Engineering, Additional Labor and Miscellaneous Services are set forth in Section 9 preceding.

13.5.1 The charges for Additional Engineering are as follows: (Cont'd)

B. Overtime, outside of normally scheduled working hours, per engineer

COMPANY	(USOC)	EACH HALF HOUR OR FRACTION THEREOF*		
		Special Access	Switched AccessRate	(T)
ADAK (AEE)	_____	$46.55	$46.55	
ATC	_____	40.79	46.55	
BETTLES	_____	40.79	46.55	
BBTC	_____	46.55	46.55	
BUSH	_____	46.55	46.55	
CIRCLE**	_____	AVG	46.55	
NO.COUNTRY**	_____	AVG	46.55	
NETCI	_____	46.55	46.55	
OTZ	_____	46.55	46.55	
SUMMIT	_____	57.75	46.55	
UKUC***	_____	46.55	46.55	(T)
UUI***	_____	46.55	46.55	(T)
YTC	_____	46.55	46.55	

Current National Exchange Carrier Association, Inc. Tariff F.C.C. No. 5 Rates and Rate Bands apply

*A call-out of a Telephone Company employee at a time not consecutive with the employee's scheduled working period is subject to a minimum charge of four hours.

**Average Schedule Company : Current National Exchange Carrier Association, Inc. Tariff F.C.C. No. 5 Rates Apply (N)

***Current United Utilities, Inc. and United-KUC, Inc. Tariff F.C.C. No. 1 Rates Apply (N)

RECEIVED

JUN 27 2014

STATE OF ALASKA
REGULATORY COMMISSION OF ALASKA

13. Rates and Charges (Cont'd)

13.5 Additional Engineering, Additional Labor and Miscellaneous Service (Cont'd)

Regulations concerning Additional Engineering, Additional Labor and Miscellaneous Services are set forth in Section 9 preceding.

13.5.1 The charges for Additional Engineering are as follows: (Cont'd)

C. Premium Time, outside of scheduled work day, per engineer

COMPANY	(USOC)	EACH HALF HOUR OR FRACTION THEREOF*	
		Special Access	Switched Access Rate
ADAK (AEE)	_____	$62.06	$62.06
ATC	_____	54.38	62.06
BETTLES	_____	54.38	62.06
BBTC	_____	62.06	62.06
BUSH	_____	62.06	62.06
CIRCLE**	_____	AVG	62.06
NO.COUNTRY**	_____	AVG	62.06
NETCI	_____	62.06	62.06
OTZ	_____	62.06	62.06
SUMMIT	_____	77.00	62.06
UKUC***	_____	62.06	62.06 (T)
UUI***	_____	62.06	62.06 (T)
YTC	_____	62.06	62.06

Current National Exchange Carrier Association, Inc. Tariff F.C.C. No. 5 Rates and Rate Bands apply

*A call-out of a Telephone Company employee at a time not consecutive with the employee's scheduled working period is subject to a minimum charge of four hours.

**Average Schedule Company : Current National Exchange Carrier Association, Inc. Tariff F.C.C. No. 5 Rates Apply (N)

***Current United Utilities, Inc. and United-KUC, Inc. Tariff F.C.C. No. 1 Rates Apply (N)

Issued: _____

Issued By: Alaska Exchange Carriers Association, Inc

By: Judith A. Colbert Judith A. Colbert Title: Executive Director

RECEIVED

JUN 2 7 2014

STATE OF ALASKA
REGULATORY COMMISSION OF ALASKA

ACCESS SERVICES

13. Rates and Charges (Cont'd)

13.5 Additional Engineering, Additional Labor and Miscellaneous Service (Cont'd)

Regulations concerning Additional Labor Periods are set forth in Section 9.2.1 and 9.2.2 preceding.

13.5.2 The charges for Additional Labor are as follows: (Cont'd)

A. Installation and Repair

1. Overtime, outside of normally scheduled working hours on a scheduled work day, per technician

COMPANY	(USOC)	EACH HALF HOUR OR FRACTION THEREOF* Special Access	Switched Access Rate
ADAK (AEE)	_____	$47.57	$47.57
ATC	_____	32.90	47.57
BETTLES	_____	32.90	47.57
BBTC	_____	47.57	47.57
BUSH	_____	47.57	47.57
CIRCLE**	_____	AVG	47.57
NO.COUNTRY**	_____	AVG	47.57
NETCI	_____	47.57	47.57
OTZ	_____	47.57	47.57
SUMMIT	_____	59.25	47.57
UKUC***	_____	47.57	47.57 (T)
UUI***	_____	47.57	47.57 (T)
YTC	_____	47.57	47.57

Current National Exchange Carrier Association, Inc. Tariff F.C.C. No. 5 Rates and Rate Bands apply

*A call-out of a Telephone Company employee at a time not consecutive with the employee's scheduled working period is subject to a minimum charge of four hours.

**Average Schedule Company : Current National Exchange Carrier Association, Inc. Tariff F.C.C. No. 5 Rates Apply (N)

***Current United Utilities, Inc. and United-KUC, Inc. Tariff F.C.C. No. 1 Rates Apply (N)

Issued: _____
Issued By: Alaska Exchange Carriers Association, Inc
By: Judith A. Colbert Judith A. Colbert Title: Executive Director

RECEIVED

JUN 27 2014

STATE OF ALASKA
REGULATORY COMMISSION OF ALASKA

ACCESS SERVICES

13. Rates and Charges (Cont'd)

13.5 Additional Engineering, Additional Labor and Miscellaneous Service (Cont'd)

Regulations concerning Additional Labor Periods are set forth in Section 9.2.1 and 9.2.2.

13.5.2 The charges for Additional Labor are as follows: (Cont'd)

A. Installation and Repair (Cont'd)

2. Premium Time, outside of normally scheduled work day, per technician

COMPANY	(USOC)	EACH HALF HOUR OR FRACTION THEREOF*		
		Special Access	Switched Access Rate	
ADAK (AEE)	_____	$63.42	$63.42	
ATC	_____	43.86	63.42	
BETTLES	_____	43.86	63.42	
BBTC	_____	63.42	63.42	
BUSH	_____	63.42	63.42	
CIRCLE**	_____	AVG	63.42	
NO.COUNTRY**	_____	AVG	63.42	
NETCI	_____	63.42	63.42	
OTZ	_____	63.42	63.42	
SUMMIT	_____	79.00	63.42	
UKUC***	_____	63.42	63.42	(T)
UUI***	_____	63.42	63.42	(T)
YTC	_____	63.42	63.42	

Current National Exchange Carrier Association, Inc. Tariff F.C.C. No. 5 Rates and Rate Bands apply

*A call-out of a Telephone Company employee at a time not consecutive with the employee's scheduled working period is subject to a minimum charge of four hours.

**Average Schedule Company : Current National Exchange Carrier Association, Inc. Tariff F.C.C. No. 5 Rates Apply (N)

***Current United Utilities, Inc. and United-KUC, Inc. Tariff F.C.C. No. 1 Rates Apply (N)

RECEIVED

JUN 27 2014

STATE OF ALASKA
REGULATORY COMMISSION OF ALASKA

ACCESS SERVICES

13. Rates and Charges (Cont'd)

13.5 Additional Engineering, Additional Labor and Miscellaneous Service (Cont'd)

Regulations concerning Additional Labor Periods are set forth in Section 9.2.3.

13.5.2 The charges for Additional Labor are as follows: (Cont'd)

B. Standby

1. Basic Time, normally scheduled working hours, per technician

COMPANY	(USOC)	EACH HALF HOUR OR FRACTION THEREOF*		
		Special Access	Switched Access Rate	
ADAK (AEE)	_____	$21.18	$21.18	
ATC	_____	21.67	21.18	
BETTLES	_____	21.67	21.18	
BBTC	_____	21.18	21.18	
BUSH	_____	21.18	21.18	
CIRCLE**	_____	AVG	21.18	
NO.COUNTRY**	_____	AVG	21.18	
NETCI	_____	21.18	21.18	
OTZ	_____	21.18	21.18	
SUMMIT	_____	38.50	21.18	
UKUC***	_____	21.18	21.18	(T)
UUI***	_____	21.18	21.18	(T)
YTC	_____	21.18	21.18	

Current National Exchange Carrier Association, Inc. Tariff F.C.C. No. 5 Rates and Rate Bands apply

*A call-out of a Telephone Company employee at a time not consecutive with the employee's scheduled working period is subject to a minimum charge of four hours.

**Average Schedule Company : Current National Exchange Carrier Association, Inc. Tariff F.C.C. No. 5 Rates Apply (N)

***Current United Utilities, Inc. and United-KUC, Inc. Tariff F.C.C. No. 1 Rates Apply (N)

RECEIVED

JUN 27 2014

STATE OF ALASKA
REGULATORY COMMISSION OF ALASKA

ACCESS SERVICES

13. Rates and Charges (Cont'd)

13.5 Additional Engineering, Additional Labor and Miscellaneous Service (Cont'd)

Regulations concerning Additional Labor Periods are set forth in Section 9.2.3.

13.5.2 The charges for Additional Labor are as follows: (Cont'd)

B. Standby (Cont'd)

2. Overtime, outside of normally scheduled working hours on a scheduled work day, per technician

COMPANY	(USOC)	EACH HALF HOUR OR FRACTION THEREOF*	
		Special Access	**Switched Access Rate**
ADAK (AEE)	_____	$31.77	$31.77
ATC	_____	32.51	31.77
BETTLES	_____	32.51	31.77
BBTC	_____	31.77	31.77
BUSH	_____	31.77	31.77
CIRCLE**	_____	AVG	31.77
NO.COUNTRY**	_____	AVG	31.77
NETCI	_____	31.77	31.77
OTZ	_____	31.77	31.77
SUMMIT	_____	57.75	31.77
UKUC***	_____	31.77	31.77 (T)
UUI***	_____	31.77	31.77 (T)
YTC	_____	31.77	31.77

Current National Exchange Carrier Association, Inc. Tariff F.C.C. No. 5 Rates and Rate Bands apply

*A call-out of a Telephone Company employee at a time not consecutive with the employee's scheduled working period is subject to a minimum charge of four hours.

**Average Schedule Company : Current National Exchange Carrier Association, Inc. Tariff F.C.C. No. 5 Rates Apply (N)

***Current United Utilities, Inc. and United-KUC, Inc. Tariff F.C.C. No. 1 Rates Apply (N)

Issued: _____

Issued By: Alaska Exchange Carriers Association, Inc

By: Judith A. Colbert Judith A. Colbert Title: Executive Director

RECEIVED

JUN 2 7 2014

STATE OF ALASKA
REGULATORY COMMISSION OF ALASKA

ACCESS SERVICES

13. Rates and Charges (Cont'd)

13.5 Additional Engineering, Additional Labor and Miscellaneous Service (Cont'd)

Regulations concerning Additional Labor Periods are set forth in Section 9.2.3.

13.5.2 The charges for Additional Labor are as follows: (Cont'd)

B. Standby (Cont'd)

3. Premium Time, outside of scheduled work day, per technician

COMPANY	(USOC)	EACH HALF HOUR OR FRACTION THEREOF*		
		Special Access	Switched Access Rate	
ADAK (AEE)	_____	$42.36	$42.36	
ATC	_____	43.34	42.36	
BETTLES	_____	43.34	42.36	
BBTC	_____	42.36	42.36	
BUSH	_____	42.36	42.36	
CIRCLE**	_____	AVG	42.36	
NO.COUNTRY**	_____	AVG	42.36	
NETCI	_____	42.36	42.36	
OTZ	_____	42.36	42.36	
SUMMIT	_____	77.00	42.36	
UKUC***	_____	42.36	42.36	(T)
UUI***	_____	42.36	42.36	(T)
YTC	_____	42.36	42.36	

Current National Exchange Carrier Association, Inc. Tariff F.C.C. No. 5 Rates and Rate Bands apply

*A call-out of a Telephone Company employee at a time not consecutive with the employee's scheduled working period is subject to a minimum charge of four hours.

**Average Schedule Company : Current National Exchange Carrier Association, Inc. Tariff F.C.C. No. 5 Rates Apply (N)

***Current United Utilities, Inc. and United-KUC, Inc. Tariff F.C.C. No. 1 Rates Apply (N)

RECEIVED

JUN 27 2014

STATE OF ALASKA
REGULATORY COMMISSION OF ALASKA

ACCESS SERVICES

13. Rates and Charges (Cont'd)

13.5 Additional Engineering, Additional Labor and Miscellaneous Service (Cont'd)

Regulations concerning Additional Labor Periods are set forth in Sections 9.2.4. and 9.2.6

13.5.2 The charges for Additional Labor are as follows: (Cont'd)

C. Testing and Maintenance with Other Telephone Companies, or Other Labor

1. Installation and Repair

a. Basic Time, normally scheduled working hours, per technician

COMPANY	(USOC)	EACH HALF HOUR OR FRACTION THEREOF*		
		Special Access	Switched Access Rate	
ADAK (AEE)	_____	$31.71	$31.71	
ATC	_____	21.93	31.71	
BETTLES	_____	21.93	31.71	
BBTC	_____	31.71	31.71	
BUSH	_____	31.71	31.71	
CIRCLE**	_____	AVG	31.71	
NO.COUNTRY**	_____	AVG	31.71	
NETCI	_____	31.71	31.71	
OTZ	_____	31.71	31.71	
SUMMIT	_____	37.50	31.71	
UKUC***	_____	31.71	31.71	(T)
UUI***	_____	31.71	31.71	(T)
YTC	_____	31.71	31.71	

Current National Exchange Carrier Association, Inc. Tariff F.C.C. No. 5 Rates and Rate Bands apply

*A call-out of a Telephone Company employee at a time not consecutive with the employee's scheduled working period is subject to a minimum charge of four hours.

**Average Schedule Company : Current National Exchange Carrier Association, Inc. Tariff F.C.C. No. 5 Rates Apply (N)

***Current United Utilities, Inc. and United-KUC, Inc. Tariff F.C.C. No. 1 Rates Apply (N)

RECEIVED

JUN 2 7 2014

STATE OF ALASKA
REGULATORY COMMISSION OF ALASKA

ACCESS SERVICES

13. Rates and Charges (Cont'd)

13.5 Additional Engineering, Additional Labor and Miscellaneous Service (Cont'd)

Regulations concerning Additional Labor Periods are set forth in Sections 9.2.4. and 9.2.6

13.5.2 The charges for Additional Labor are as follows: (Cont'd)

C. Testing and Maintenance with Other Telephone Companies, or Other Labor (Cont'd)

1. Installation and Repair (Cont'd)

b. Overtime, outside of normally scheduled working hours on a scheduled work day, per technician

COMPANY	(USOC)	EACH HALF HOUR OR FRACTION THEREOF*		
		Special Access	Switched Access Rate	
ADAK (AEE)	_____	$47.57	$47.57	
ATC	_____	32.90	47.57	
BETTLES	_____	32.90	47.57	
BBTC	_____	47.57	47.57	
BUSH	_____	47.57	47.57	
CIRCLE**	_____	AVG	47.57	
NO.COUNTRY**	_____	AVG	47.57	
NETCI	_____	47.57	47.57	
OTZ	_____	47.57	47.57	
SUMMIT	_____	56.25	47.57	
UKUC***	_____	47.57	47.57	(T)
UUI***	_____	47.57	47.57	(T)
YTC	_____	47.57	47.57	

Current National Exchange Carrier Association, Inc. Tariff F.C.C. No. 5 Rates and Rate Bands apply

*A call-out of a Telephone Company employee at a time not consecutive with the employee's scheduled working period is subject to a minimum charge of four hours.

**Average Schedule Company : Current National Exchange Carrier Association, Inc. Tariff F.C.C. No. 5 Rates Apply (N)

***Current United Utilities, Inc. and United-KUC, Inc. Tariff F.C.C. No. 1 Rates Apply (N)

Issued: _____

Issued By: Alaska Exchange Carriers Association, Inc

By: Judith A. Colbert Judith A. Colbert Title: Executive Director

RECEIVED

JUN 27 2014

STATE OF ALASKA
REGULATORY COMMISSION OF ALASKA

ACCESS SERVICES

13. Rates and Charges (Cont'd)

13.5 Additional Engineering, Additional Labor and Miscellaneous Service (Cont'd)

Regulations concerning Additional Labor Periods are set forth in Sections 9.2.4 and 9.2.6

13.5.2 The charges for Additional Labor are as follows: (Cont'd)

C. Testing and Maintenance with Other Telephone Companies, or Other Labor (Cont'd)

1. Installation and Repair (Cont'd)

c. Premium Time, outside of scheduled work day, per technician

COMPANY	(USOC)	EACH HALF HOUR OR FRACTION THEREOF*		
		Special Access	Switched Access Rate	
ADAK (AEE)	_____	$63.42	$63.42	
ATC	_____	43.86	63.42	
BETTLES	_____	43.86	63.42	
BBTC	_____	63.42	63.42	
BUSH	_____	63.42	63.42	
CIRCLE**	_____	AVG	63.42	
NO.COUNTRY**	_____	AVG	63.42	
NETCI	_____	63.42	63.42	
OTZ	_____	63.42	63.42	
SUMMIT	_____	75.00	63.42	
UKUC***	_____	63.42	63.42	(T)
UUI***	_____	63.42	63.42	(T)
YTC	_____	63.42	63.42	

Current National Exchange Carrier Association, Inc. Tariff F.C.C. No. 5 Rates and Rate Bands apply

*A call-out of a Telephone Company employee at a time not consecutive with the employee's scheduled working period is subject to a minimum charge of four hours.

**Average Schedule Company : Current National Exchange Carrier Association, Inc. Tariff F.C.C. No. 5 Rates Apply (N)

***Current United Utilities, Inc. and United-KUC, Inc. Tariff F.C.C. No. 1 Rates Apply (N)

RECEIVED
OCT 27 2014
STATE OF ALASKA
REGULATORY COMMISSION OF ALASKA

ACCESS SERVICES

13. Rates and Charges (Cont'd)

13.5 Additional Engineering, Additional Labor And Miscellaneous Service (Cont'd)

Regulations concerning Additional Labor Periods are set forth in Sections 9.2.4 and 9.2.6

13.5.2 The charges for Additional Labor are as follows:

C. Testing And Maintenance With Other Telephone Companies, Or Other Labor (Cont'd)

2. Central Office Maintenance

Basic Time, normally scheduled working hours, per technician
EACH HALF HOUR OR FRACTION THEREOF**

COMPANY	(USOC)	Special Access	Switched Access Rate	
ADAK (AEE)	_____	$34.66	$34.66	(R)
ATC	_____	23.81	34.66	
BETTLES	_____	23.81	34.66	
BBTC	_____	34.66	34.66	
BUSH	_____	34.66	34.66	
CIRCLE**	_____	AVG	34.66	
NO.COUNTRY**	_____	AVG	34.66	
NETCI	_____	34.66	34.66	
OTZ	_____	34.66	34.66	
SUMMIT	_____	39.50	34.66	
UKUC***	_____	34.66	34.66	
UUI***	_____	34.66	34.66	
YTC	_____	34.66	34.66	(R)

Current National Exchange Carrier Association, Inc. Tariff F.C.C. No. 5 Rates and Rate Bands Apply

*A call-out of a Telephone Company employee at a time not consecutive with the employee's scheduled working period is subject to a minimum charge of four hours.

**Average Schedule Company; current National Exchange Carrier Association Tariff, FCC No. 5, rates apply

*** Current United Utilities, Inc. and United-KUC, Inc. Tariff F.C.C. No. 1 Rates Apply

RECEIVED

JUN 27 2014

STATE OF ALASKA
REGULATORY COMMISSION OF ALASKA

ACCESS SERVICES

13. Rates and Charges (Cont'd)

13.5 Additional Engineering, Additional Labor and Miscellaneous Service (Cont'd)

Regulations concerning Additional Labor Periods are set forth in Sections 9.2.4 and 9.2.6

13.5.2 The charges for Additional Labor are as follows: (Cont'd)

C. Testing and Maintenance with Other Telephone Companies, or Other Labor (Cont'd)

2. Central Office Maintenance (Cont'd)

b. Overtime, outside of normally scheduled working hours on a scheduled work day, per technician

COMPANY	(USOC)	EACH HALF HOUR OR FRACTION THEREOF*	
		Special Access	Switched Access Rate
ADAK (AEE)	_____	$51.99	$51.99
ATC	_____	35.72	51.99
BETTLES	_____	35.72	51.99
BBTC	_____	51.99	51.99
BUSH	_____	51.99	51.99
CIRCLE**	_____	AVG	51.99
NO.COUNTRY**	_____	AVG	51.99
NETCI	_____	51.99	51.99
OTZ	_____	51.99	51.99
SUMMIT	_____	59.25	51.99
UKUC***	_____	51.99	51.99 (T)
UUI***	_____	51.99	51.99 (T)
YTC	_____	51.99	51.99

Current National Exchange Carrier Association, Inc. Tariff F.C.C. No. 5 Rates and Rate Bands apply

*A call-out of a Telephone Company employee at a time not consecutive with the employee's scheduled working period is subject to a minimum charge of four hours.

**Average Schedule Company : Current National Exchange Carrier Association, Inc. Tariff F.C.C. No. 5 Rates Apply (N)

***Current United Utilities, Inc. and United-KUC, Inc. Tariff F.C.C. No. 1 Rates Apply (N)

RECEIVED

JUN 27 2014

STATE OF ALASKA
REGULATORY COMMISSION OF ALASKA

ACCESS SERVICES

13. Rates and Charges (Cont'd)

13.5 Additional Engineering, Additional Labor and Miscellaneous Service (Cont'd)

Regulations concerning Additional Labor Periods are set forth in Sections 9.2.4 and 9.2.6

13.5.2 The charges for Additional Labor are as follows: (Cont'd)

C. Testing and Maintenance with Other Telephone Companies, or Other Labor (Cont'd)

2. Central Office Maintenance (Cont'd)

c. Premium Time, outside of scheduled work day, per technician

COMPANY	(USOC)	EACH HALF HOUR OR FRACTION THEREOF*		
		Special Access	Switched Access Rate	
ADAK (AEE)	_____	$69.32	$69.32	
ATC	_____	47.62	69.32	
BETTLES	_____	47.62	69.32	
BBTC	_____	69.32	69.32	
BUSH	_____	69.32	69.32	
CIRCLE**	_____	AVG	69.32	
NO.COUNTRY**	_____	AVG	69.32	
NETCI	_____	69.32	69.32	
OTZ	_____	69.32	69.32	
SUMMIT	_____	79.00	69.32	
UKUC***	_____	69.32	69.32	(T)
UUI***	_____	69.32	69.32	(T)
YTC	_____	69.32	69.32	

Current National Exchange Carrier Association, Inc. Tariff F.C.C. No. 5 Rates and Rate Bands apply

*A call-out of a Telephone Company employee at a time not consecutive with the employee's scheduled working period is subject to a minimum charge of four hours.

**Average Schedule Company : Current National Exchange Carrier Association, Inc. Tariff F.C.C. No. 5 Rates Apply (N)

***Current United Utilities, Inc. and United-KUC, Inc. Tariff F.C.C. No. 1 Rates Apply (N)

RECEIVED
JAN 20 1994
State of Alaska
Public Utilities Commission

TELEPHONE EXCHANGE CARRIERS OF ALASKA

ACCESS SERVICES

13. Rates and Charges (Cont'd) (L)

13.5 **ADDITIONAL ENGINEERING, ADDITIONAL LABOR AND MISCELLANEOUS SERVICE** (Cont'd) (T)

Regulations concerning Miscellaneous Services are set forth in Section 9.3.

13.5.3 MISCELLANEOUS SERVICES

(A) **ADDITIONAL COOPERATIVE ACCEPTANCE TESTING - SWITCHED ACCESS**

(1) **TESTING PERIODS**
Basic Time, Overtime* and Premium Time*

See the rates for Additional Labor as set forth in 13.5.2 (C) preceding.

* A call-out of a Telephone Company employee at a time not consecutive with the employee's scheduled working period is subject to a minimum charge of four hours. (L) (T)

(L) Text relocated from Original Sheet No. 311.

Tariff Advice No. 18 Effective: December 31, 1993

Issued: _____
Issued By: Alaska Exchange Carriers Association, Inc.
By: Ruth A. Steele Title: President

RECEIVED
APR 25 2014
STATE OF ALASKA
REGULATORY COMMISSION OF ALASKA

ACCESS SERVICES

13. Rates and Charges (Cont'd)

13.5 Additional Engineering, Additional Labor And Miscellaneous Service (Cont'd)

Regulations concerning Additional Automatic Testing are set forth in Section 9.3.1(A)(2).

13.5.3 Miscellaneous Services - (Cont'd)

B. Additional Automatic Testing - Switched Access to First Point of Switching

		Per Test Per Transmission Path	
1.	Gain-Slope Tests	$2.89	(N)
2.	C-Notched Noise Tests	$2.89	
3.	1004 Hz Loss**	$2.89	
4.	C-Message Noise**	$2.89	
5.	Balance (ret. loss)**	$2.89	(N)

See the rates for Additional Labor as set forth in 13.5.2 (C) preceding.

**1004 Hz Loss, C-Message Noise and Balance are non-chargeable routine tests, however, they may be requested on an as needed or more than routine schedule basis, in which case the charges herein apply

RECEIVED
JAN 20 1994
State of Alaska
Public Utilities Commission

TELEPHONE EXCHANGE CARRIERS OF ALASKA

ACCESS SERVICES

13. Rates and Charges (Cont'd) (L)

13.4 **ADDITIONAL ENGINEERING, ADDITIONAL LABOR AND MISCELLANEOUS SERVICE** (Cont'd) (T)

Regulations concerning Additional Manual Testing are set forth in Section 9.3.1(B)(1).

13.4.3 MISCELLANEOUS SERVICES - Cont'd

(C) **ADDITIONAL MANUAL TESTING - SWITCHED ACCESS TO FIRST POINT OF SWITCHING**

Additional Tests - Each half hour or fraction thereof

(1) Gain-Slope Tests
(2) C-Notched Noise Tests
(3) And any other agreed to test, Per Techinician

See the rates for Additional Labor as set forth in 13.5.2 (C) preceding. (L) (T)

(L) Text relocated from Original Revised Sheet No. 312.

Tariff Advice No. 18 Effective: December 31, 1993

Issued: _____
Issued By: Alaska Exchange Carriers Association, Inc.
By: Ruth A. Stoke Title: President

RECEIVED
JAN 20 1994
State of Alaska
Public Utilities Commission

TELEPHONE EXCHANGE CARRIERS OF ALASKA

ACCESS SERVICES

13. Rates and Charges (Cont'd) (L)

13.5 **ADDITIONAL ENGINEERING, ADDITIONAL LABOR AND MISCELLANEOUS SERVICE** (Cont'd) (T)

Regulations concerning Additional Cooperative Acceptance Testing are set forth in Section 9.3.1(B)(1).

13.5.3 MISCELLANEOUS SERVICES - Cont'd

(D) **ADDITIONAL COOPERATIVE ACCEPTANCE TESTING - SPECIAL ACCESS**

(1) **Testing Periods - EACH HALF HOUR OR FRACTION THEREOF**

Basic Time, Overtime* and Premium Time*

See the rates for Additional Labor as set forth in 13.5.2 (C) preceding.

* A call-out of a Telephone Company employee at a time not consecutive with the employee's scheduled working period is subject to a minimum charge of four hours. (L) (T)

(L) Text relocated from Original Revised Sheet No. 312.

Tariff Advice No. 18 Effective: December 31, 1993

Issued: _____
Issued By: Alaska Exchange Carriers Association, Inc.
By: Ruth A. Stroh Title: President

RECEIVED
JAN 20 1994
State of Alaska
Public Utilities Commission

13. Rates and Charges (Cont'd) (L)

13.5 **ADDITIONAL ENGINEERING, ADDITIONAL LABOR AND MISCELLANEOUS SERVICE** (Cont'd) (T)

Regulations concerning Additional Cooperative Acceptance Testing are set forth in Section 9.3.1(B)(2).

13.5.3 MISCELLANEOUS SERVICES - Cont'd

(E) **ADDITIONAL MANUAL TESTING - SPECIAL ACCESS**

(1) **Testing Periods** - **EACH HALF HOUR OR FRACTION THEREOF**

Basic Time, Overtime* and Premium Time*

See the rates for Additional Labor as set forth in 13.5.2 (C) preceding.

* A call-out of a Telephone Company employee at a time not consecutive with the employee's scheduled working period is subject to a minimum charge of four hours. (L) (T)

(L) Text relocated from Original Revised Sheet No. 313.

RECEIVED
JAN 20 1994
State of Alaska
Public Utilities Commission

13. Rates and Charges (Cont'd) (L)

13.5 **ADDITIONAL ENGINEERING, ADDITIONAL LABOR AND MISCELLANEOUS SERVICE** (Cont'd) (T)

Regulations concerning Additional Cooperative Acceptance Testing are set forth in Section 9.3.2.

13.5.3 MISCELLANEOUS SERVICES - Cont'd

(F) **MAINTENANCE OF SERVICE**

(1) **Maintenance of Service Periods**
EACH HALF HOUR OR FRACTION THEREOF

Basic Time, Overtime* and Premium Time*

See the rates for Additional Labor as set forth in 13.5.2 (C) preceding.

* A call-out of a Telephone Company employee at a time not consecutive with the employee's scheduled working period is subject to a minimum charge of four hours. (L) (T)

(L) Text relocated from Original Revised Sheet No. 313.

RECEIVED
JAN 20 1994
State of Alaska
Public Utilities Commission

TELEPHONE EXCHANGE CARRIERS OF ALASKA

ACCESS SERVICES

13. Rates and Charges (Cont'd)

13.5 **ADDITIONAL ENGINEERING, ADDITIONAL LABOR AND MISCELLANEOUS SERVICE** (Cont'd)

Regulations concerning Additional Cooperative Acceptance Testing are set forth in Section 9.3.2.

13.5.3 MISCELLANEOUS SERVICES - Cont'd

(D)

(D)

RECEIVED
December 6, 2024
STATE OF ALASKA
REGULATORY COMMISSION OF ALASKA

ACCESS SERVICES

Index to Rates and Charges (N)

14. Non-Pooling Company Rates and Charges

Arctic Slope Telephone Association Cooperative, Inc	ASTAC-2
Cordova Telephone Cooperative, Inc.	CTC-2
Copper Valley Telephone Cooperative, Inc.	CVTC-2
Ketchikan Public Utilities	KPU-2
Interior Telephone Company, Inc.	ITC-I
Mukluk Telephone Company Inc.	MTC-1
Matanuska Telecom Association, Inc.	MTA-1 (N)

RECEIVED

NOV 0 3 2008

STATE OF ALASKA
REGULATORY COMMISSION OF ALASKA

ARCTIC SLOPE TELEPHONE ASSOCIATION COOPERATIVE, INC.
COMPANY SPECIFIC ACCESS SERVICES
RATES AND CHARGES

Arctic Slope Telephone Association Cooperative, Inc.
4300 B Street, Suite 501
Anchorage, AK 99503

Pursuant to:
U-08-145(1)

Effective: December 20, 2008

Issued: November 3, 2008
Issued By: Arctic Slope Telephone Association Cooperative, Inc.
By: David S. Fauske Title: General Manager

RECEIVED
JUN 21 2021
STATE OF ALASKA
REGULATORY COMMISSION OF ALASKA

ARCTIC SLOPE TELEPHONE ASSOCIATION COOPERATIVE
COMPANY SPECIFIC ACCESS SERVICES

Index to Rates and Charges

14.1	Common Line Access Service		ASTAC-7
	14.1.1	Carrier Common Line Access Service	ASTAC-11
	14.1.2	Recurring Charge	ASTAC-11
		14.1.2.a Carrier Common Line	
		14.1.2.b Network Access Fee	
14.2	Switched Access Service		ASTAC-12
	14.2.1	Non-Recurring Charges	ASTAC-12
		A. Access Order	
		B. Service Date Change Charge	
		C. Design Change Charge	
		D. Miscellaneous Service Order Charge	
		E. Transport – Installation	
		F. Trunk Activation	
		G. Interim NXX Translation	
		H. Telecommunications Service Priority Charge	
	14.2.2	Recurring Charges	ASTAC-13
		A. Entrance Facility	
		B. Direct Trunked Transport	
		C. Local Switching	ASTAC-13.1
		D. Information Surcharge	
		E. Toll Free Data Base Access Service Queries	T
		F. Multiplexing	
		G. Tandem Switched Transport	
	14.2.3	Equal Access Recovery Charge	ASTAC-14
	14.2.4	Presubscription Change Charge	ASTAC-14

Issued: _____
Issued By: Arctic Slope Telephone Association Cooperative, Inc.
By: Jens Laipenieks Title: General Manager

RECEIVED

NOV 0 3 2008

STATE OF ALASKA
REGULATORY COMMISSION OF ALASKA

ARCTIC SLOPE TELEPHONE ASSOCIATION COOPERATIVE
COMPANY SPECIFIC ACCESS SERVICES

Index to Rates and Charges - (Cont'd)

14.3	Special Access Service	ASTAC-15
	14.3.1a Surcharge for Special Access Service	ASTAC-15
	14.3.1b Telecommunications Service Priority Charge	ASTAC-15
	14.3.1c Special Access Ordering	ASTAC-15
	A. Access Order Charge	
	B. Service Date Change Charge	
	C. Design Change Charge	
	E. Miscellaneous Service Order Charge	
14.3.2	Voice Grade Service	ASTAC-16
	A. Channel Termination	ASTAC-16
	B. Channel Mileage	ASTAC-16
	C. Optional Features and Functions	ASTAC-16
	1. Bridging	ASTAC-16
	2. Conditioning per Termination	ASTAC-18
	3. Improved Return Loss for Effective Two-Wire to Four-Wire Transmission	ASTAC-19
	4. Customer-Specified Receive Level	ASTAC-19
	5. Multiplexing, per Arrangement Voice Grade to Telegraph Grade	ASTAC-19
	6. Signaling Capability	ASTAC-19
	7. Selective Signaling Arrangement	ASTAC-20
	8. Transfer Arrangement	ASTAC-20
	9. Public Packet Switching Network (PPSN)	ASTAC-20

Pursuant to:
U-08-145(1)

Effective: December 20, 2008

Issued: November 3, 2008
Issued By: Arctic Slope Telephone Association Cooperative, Inc.
By: David S. Fauske Title: General Manager

RECEIVED

NOV 0 3 2008

STATE OF ALASKA
REGULATORY COMMISSION OF ALASKA

ARCTIC SLOPE TELEPHONE ASSOCIATION COOPERATIVE
COMPANY SPECIFIC ACCESS SERVICES

Index to Rates and Charges - (Cont'd)

14.3 Special Access Service

14.3.3 Digital Data Service ASTAC-21

A. Channel Termination, per Termination ASTAC-21

B. Channel Mileage ASTAC-21
1. Channel Mileage Facility, per Mile
2 Channel Mileage Termination, per Termination

C. Optional Features and Functions ASTAC-22
1. Bridging, per Port
2. Loop Transfer Arrangement
3. Public Packet Switching Network Interface Arrangement

D. Channel Service Unit per Termination ASTAC-23

Pursuant to:
U-08-145(1)

Effective: December 20, 2008

Issued: November 3, 2008
Issued By: Arctic Slope Telephone Association Cooperative, Inc.
By: David S. Fauske Title: General Manager

RECEIVED
NOV 0 3 2008
STATE OF ALASKA
REGULATORY COMMISSION OF ALASKA

ARCTIC SLOPE TELEPHONE ASSOCIATION COOPERATIVE
COMPANY SPECIFIC ACCESS SERVICES

Index to Rates and Charges - (Cont'd)

14.3 Special Access Service

14.3.4 High Capacity Service ASTAC-23

A. Channel Termination per Termination ASTAC-23

B. Channel Mileage ASTAC-23

C. Optional Features and Functions ASTAC-24
1. Multiplexing
2. Automatic Loop Transfer
3. Transfer Arrangement
4. High Capacity Synchronization

D. Network Channel Terminating Equipment (NCTE) ASTAC-26
1. 1.544 Mbps per Termination
2. Automatic Loop Transer

14.4 Other Services

14.4.1 Public Packet Data Network ASTAC-26
A. Frame Relay Access Service ASTAC-26
1. Connections
2. Access Customer Port
3 Permanent Virtual Connections

Pursuant to:
U-08-145(1)

Effective: December 20, 2008

Issued: November 3, 2008
Issued By: Arctic Slope Telephone Association Cooperative, Inc.
By: David S. Fauske Title: General Manager

RECEIVED

MAY 17 2013

STATE OF ALASKA
REGULATORY COMMISSION OF ALASKA

ARCTIC SLOPE TELEPHONE ASSOCIATION COOPERATIVE
COMPANY SPECIFIC ACCESS SERVICES

Index to Rates and Charges - (Cont'd)

14.5	Additional Engineering, Additional Labor And Miscellaneous Service – Non Switched Services	ASTAC-28	(T)
	14.5.1 Additional Engineering	ASTAC-28	
	14.5.2 Additional Labor	ASTAC-28	
	A. Installation and Repair	ASTAC-28	
	B. Stand-By	ASTAC-29	
	C. Testing and Maintenance with Other Telephone Companies or Other Labor	ASTAC-29	
	14.5.3 Miscellaneous Services	ASTAC-30	
	A. Additional Cooperative Acceptance Testing – Special Access	ASTAC-31	(T)
	B. Additional Manual Testing - Special Access	ASTAC-32	
	C. Maintenance of Service	ASTAC-32	(T)
14.6	Additional Engineering, Labor and Miscellaneous Services – Switched Access		(N)
	14.6.1 Additional Engineering		
	14.6.2 Additional Labor		
	A. Installation and Repair	ASTAC-33	
	B. Stand-By	ASTAC-33	
	C. Testing and Maintenance, Installation and Repair	ASTAC-33	
	D. Central Office Maintenance Technician	ASTAC-33	
	14.6.3 Miscellaneous Services		
	A. Additional Cooperative Acceptance Testing – Switched Access	ASTAC-34	
	B. Additional Automatic Testing – Switched Access to First Point of Switching	ASTAC-34	
	C. Additional Manual Testing – Switched Access to First Point of Switching	ASTAC-34	(N)

Issued: May 17, 2013
Issued By: Arctic Slope Telephone Association Cooperative, Inc.
By: Steve Merriam Title: General Manager

RECEIVED

DEC 17 2018

STATE OF ALASKA
REGULATORY COMMISSION OF ALASKA

ARCTIC SLOPE TELEPHONE ASSOCIATION COOPERATIVE
COMPANY SPECIFIC ACCESS SERVICES

14. Rates and Charges

14.1 Carrier Common Line Access Service (T)

A. General Description

Carrier Common Line Access provides for the use of ASTAC's common lines by interexchange carriers (IXC) for access to ASTAC's end users to furnish intrastate service.

Carrier Common Line Access is provided where ASTAC's end users subscribe to local exchange telephone service.

RECEIVED

DEC 17 2018

STATE OF ALASKA
REGULATORY COMMISSION OF ALASKA

ARCTIC SLOPE TELEPHONE ASSOCIATION COOPERATIVE
COMPNAY SPECIFIC ACCESS SERVICES

14. Rates and Charges

14.1 Carrier Common Line Access Service (Cont'd) (T)

B. Limitations

1. A telephone number is not provided with Carrier Common Line Access.
2. Detail billing is not provided for Carrier Common Line Access.
3. Directory listings are not included in the rates and charges for Carrier Common Line Access.
4. Intercept arrangements are not included in the rates and charges for Carrier Common Line Access.

C. Undertaking of ASTAC

ASTAC will provide the use of ASTAC's common lines by an IXC for access to end users. The procedure for recovering the Carrier Common Line revenue requirement are set forth in these rules and regulations.

D. Obligations of the Customer

1. Any switched access service associated with Carrier Common Line Access shall be ordered under other sections of this tariff.
2. The IXC facilities at the premises of the ordering IXC shall provide the necessary on-hook and off-hook supervision.

RECEIVED

DEC 17 2018

STATE OF ALASKA
REGULATORY COMMISSION OF ALASKA

ARCTIC SLOPE TELEPHONE ASSOCIATION COOPERATIVE
COMPANY SPECIFIC ACCESS SERVICES

14. Rates and Charges

14.1 Carrier Common Line Access Service (Cont'd) (T)

E. Rate Regulation

1. The Carrier Common Line Access Charge will be billed as Essential Network Support to the Alaska Universal Service Administrative Company (AUSAC) under this tariff in accordance with the regulations set forth below. **(N)** **(N)**

2. Annual Essential Network Support (ENS) is an amount equal to (i) the amount of carrier common line support received for the year ended December 31, 2016, plus (ii) the amount of carrier of last resort support received for the year ended December 31, 2016. The ENS amount is frozen at that level. The monthly rate will be determined by dividing the annual amount by twelve. **(D)(N)**

   a. The Company will continue to use the frozen Essential Network Support amount, to be recovered from AUSAC pursuant to this tariff, in calculating the monthly ENS payable under this tariff until it is superseded by a subsequent order of the RCA. **(D)(N)**

RECEIVED

JUN 14 2011

STATE OF ALASKA
REGULATORY COMMISSION OF ALASKA

ARCTIC SLOPE TELEPHONE ASSOCIATION COOPERATIVE
COMPANY SPECIFIC ACCESS SERVICES

14. Rates and Charges

14.1 Common Line Access Service (Cont'd)

E. Rate Regulation

(D)

(D)

(D) Carrier and Area Specific Bulk Billing rules and regulations 2.c-h are removed per R-08-003(9)

RECEIVED
DEC 1 8 2018
STATE OF ALASKA
REGULATORY COMMISSION OF ALASKA

ARCTIC SLOPE TELEPHONE ASSOCIATION COOPERATIVE COMPANY SPECIFIC ACCESS SERVICES

14. Rates and Charges

14.1 Carrier Common Line Access Service (Cont'd) (T)

14.1.1 Carrier Common Line Access Service

14.1.2a Carrier Common Line Charge
Reference Tariff Section 14.1 (C)

Essential Network Support		(N)	**(D)**
Monthly Recurring Charge	$59,437	(N)	
			(D)

14.1.2.b Network Access Fee (NAF)
Reference Tariff Section 4.1

Monthly Recurring Charge	$5.75

D=Deleted Carrier Common Line Charge, Per Line

RECEIVED
JUN 22 2026
STATE OF ALASKA
REGULATORY COMMISSION OF ALASKA

14. Rates and Charges (Cont'd)

14.2 Switched Access Service
47 CFR § 51.909 required Transitional Intrastate Access Service (TIAS) rates be subject to the same rates and rate structure as functionally equivalent interstate rates, effective July 1, 2013.

14.2.1 Nonrecurring Charges	Rate	AECA Tariff Reference	
A. Access Order	$140.00	5.2	I
B. Service Date Change Charge	$98.00	5.7	I
C. Design Change Charge	$137.00	5.7	I
D. Miscellaneous Service Order Charge, per occurrence	$200.00	5.7	I
E. Transport – Installation per Entrance Facility		6.8	
1. Voice Grade Two Wire	$406.46		R
2. Voice Grade Four Wire	$406.46		R
3. DS1	$298.08		R
4. DS3	$401.93		R
F. Trunk Activation per Order	$414.58	6.8	R
G. Interim NXX Translation per Order	$198.72	6.8	R
H. Telecommunications Service Priority Charge per Circuit	$54.63	9.3	

RECEIVED
JUN 22 2026
STATE OF ALASKA
REGULATORY COMMISSION OF ALASKA

ARCTIC SLOPE TELEPHONE ASSOCIATION COOPERATIVE, INC.
SPECIFIC ACCESS SERVICES

14. Rates and Charges (Cont'd)

14.2 Switched Access Service (Cont'd)

14.2.2 Recurring Charges

		Rate	AECA Tariff Reference	
A.	Entrance Facility, per termination			
1.	Voice Grade Two Wire	$39.70	6.8	R
2.	Voice Grade Four Wire	$63.53	6.8	R
3.	DS1	$193.54	6.8	R
4.	DS3	$1,767.11	6.8	R
5.	Collocation			

The Entrance Facility charge specified in Section 6.2 of this tariff will not apply when: 1) the customer designated premises and the serving wire center are physically (including caged, cageless, shared and adjacent arrangements) or virtually collocated as those terms are used in 47 CFR 51.323, and (2) the customer obtains collocation for the purpose of interconnection with the Telephone Company's network for the transmission and routing of telephone exchange service, exchange access or both, and for the purpose of providing local exchange or excahnge access services to its customers.

B. Direct Trunked Transport

1. Direct Trunked Transport Facility, per mile			
a. Voice Grade Two Wire	$2.82	6.2	R
b. Voice Grade Four Wire	$2.82	6.2	R
c. DS1	$13.26	6.2	R
d. DS3	$115.51	6.2	
2. Direct Trunked Transport Termination, per termination			
a. Voice Grade Two Wire	$28.42	6.2	R
b. Voice Grade Four Wire	$28.42	6.2	R
c. DS1	$68.79	6.2	R
d. DS3	$441.76	6.2	R

RECEIVED
JUN 22 2026
STATE OF ALASKA
REGULATORY COMMISSION OF ALASKA

ARCTIC SLOPE TELEPHONE ASSOCIATION COOPERATIVE, INC.
SPECIFIC ACCESS SERVICES

14. Rates and Charges (Cont'd)

14.2 Switched Access Service (Cont'd)

		AECA Tariff Reference	
C. Local Switching Per Minute of Use			
Reference Tariff Section 6.8			
Originating Non-Toll Free Rate	$.0000000		
Originating Toll Free Rate	N/A		
Terminating	$0.000000	6.8	
D. Information Surcharge per 100 minutes, Premium			
Originating Non-Toll Free Rate	$0.0000		
Originating Toll Free Rate	N/A		
Terminating	$0.0000	6.8	
E. Toll Free Data Base Access Service Query (Equal Access)			
Reference Tariff Section 6.8			
1. Basic per Query	$0.000200	6.8	
2. Basic with Vertical Feature per Query	$0.000200	6.8	
F. Multiplexing, per arrangement, DS3 to DS1	$403.07	6.2	R
G. Tandem Switched Transport Per Minutes of Use			
1. Facility, Per Access Minute Per Mile	N/A	6.2	
2. Termination, Per Access Minute Per Termination	N/A	6.2	
3. Tandem Switching, Per Access Minute Per Tandem	N/A	6.2	

RECEIVED

APR 9 2014

STATE OF ALASKA
REGULATORY COMMISSION OF ALASKA

ARCTIC SLOPE TELEPHONE ASSOCIATION COOPERATIVE
COMPANY SPECIFIC ACCESS SERVICES

14. Rates and Charges (Cont'd)

14.2 Switched Access Service (Cont'd)

14.2.3	Equal Access Recovery Charge Reference Tariff Section 6.8		
	Per Presubscribed Equal Access Line	n/a	
14.2.4	Presubscription Change Charge, per line or trunk, submitted manually	$5.50	(N)

RECEIVED

NOV 0 3 2008

STATE OF ALASKA
REGULATORY COMMISSION OF ALASKA

ARCTIC SLOPE TELEPHONE ASSOCIATION COOPERATIVE
COMPANY SPECIFIC ACCESS SERVICES

14. Rates and Charges (Cont'd)

14.3 Special Access Service

14.3.1a Surcharge For Special Access Service
Reference Tariff Section 7.3

Per Voice Grade Equivalent	$25.00

14.3.1b Telecommunications Service Priority Charge
Reference Tariff Section 9.3

Per Circuit – Monthly Recurring Charge	$1.00
Per Circuit – Non-Recurring Charge	$55.00

14.3.1c Special Access Ordering
Reference Tariff Section 5.2 and 5.8

A. Access Order Charge per Order $93.00

B. Service Date Change Charge $44.00

A Service Date Change Charge will apply, on a per order per occurrence basis, for each service date changed. The Access Order Charge as specified in 14.3.1c(A) preceding does not apply.

C. Design Change Charge $44.00

The Design Change Charge will apply on a per order per occurrence basis, for each order requiring design change.

D. Miscellaneous Service Order Charge per Occurrence $44.00

Pursuant to:
U-08-145(1)

Effective: December 20, 2008

Issued: November 3, 2008
Issued By: Arctic Slope Telephone Association Cooperative, Inc.
By: David S. Fauske Title: General Manager

RECEIVED

JUL 1 3 2009

ARCTIC SLOPE TELEPHONE ASSOCIATION COOPERATIVE
COMPANY SPECIFIC ACCESS SERVICES

14. Rates and Charges (Cont'd)

14.3 Special Access Service (Cont'd)

14.3.2 Voice Grade Service
Reference Tariff Section 7.4

A. Channel Termination Per Termination *

Two-Wire, Monthly Recurring Charge	$208.90	R
Four-Wire, Monthly Recurring Charge	334.25	R
Non-Recurring Charge	289.00	

B. Channel Mileage

1. Channel Mileage Facility

Two-Wire, Monthly Recurring Charge per Mile	n/a
Four-Wire, Monthly Recurring Charge per Mile	n/a

2. Channel Mileage Termination Per Termination

Two-Wire, Monthly Recurring Charge	n/a
Four-Wire Monthly Recurring Charge	n/a

L

* The Channel Termination charge specified in Section 7.2.1(A) of this tariff will not apply when: N
1) the customer designated premises and the serving wire center are physically (including caged, cageless, shared and adjacent arrangements) or virtually collocated as those terms are used in 47 CFR 51.323 and
2) the customer obtains collocation for the purpose of interconnection with the Telephone Company's network for the transmission and routing of telephone exchange service, exchange access or both, and for the purpose of providing local exchange or exchange access services to its customers.

N L

L = Optional Features and Functions relocated to Tariff Sheet No. 16.1.

Pursuant to:
U-08-145(8)

Effective: September 11, 2009

Issued: July 13, 2009
Issued By: Arctic Slope Telephone Association Cooperative, Inc.
By: Steve Merriam Title: General Manager

RECEIVED
JUL 13 2009

ARCTIC SLOPE TELEPHONE ASSOCIATION COOPERATIVE
COMPANY SPECIFIC ACCESS SERVICES

14. Rates and Charges (Cont'd)

14.3 Special Access Service (Cont'd)

14.3.2 Voice Grade Service
Reference Tariff Section 7.4

L

C. Optional Features And Functions

1. Bridging

a. Voice Bridging, Per Port

Two-Wire, Monthly Recurring Charge	$5.79
Four-Wire, Monthly Recurring Charge	5.79
Non-Recurring Charge	n/a

b. Data Bridging, Per Port

Two-Wire, Monthly Recurring Charge	$5.79
Four-Wire, Monthly Recurring Charge	5.79
Non-Recurring Charge	n/a

c. Telephoto Bridging, Per Port

Two-Wire, Monthly Recurring Charge	$5.79
Four-Wire, Monthly Recurring Charge	$5.79
Non-Recurring Charge	n/a

L

L = Material moved from Tariff Sheet No. 16.

RECEIVED

NOV 0 3 2008

STATE OF ALASKA
REGULATORY COMMISSION OF ALASKA

ARCTIC SLOPE TELEPHONE ASSOCIATION COOPERATIVE
COMPANY SPECIFIC ACCESS SERVICES

14. Rates and Charges (Cont'd)

14.3 Special Access Service (Cont'd)

14.3.2 Voice Grade Service (Cont'd)
Reference Tariff Section 7.4

C. Optional Features And Functions (Cont'd)

1. Bridging (Cont'd)

d. Dataphone Select-A-Station

Sequential Arrangement, Ports per Channel Connected	
Two-Wire, Monthly Recurring Charge	$ 19.77
Four-Wire, Monthly Recurring Charge	104.88
Non-Recurring Charge	n/a
Addressable Arrangement, Ports Per Channel Connected	
Two-Wire, Monthly Recurring Charge	$ 21.16
Four-Wire, Monthly Recurring Charge	91.60
Non-Recurring Charge	n/a

e. Telemetry And Alarm Bridging

Active Bridging Channel Connections, Per Channel Connected	
Split Band, Monthly Recurring Charge	$ 9.23
Summation, Monthly Recurring Charge	3.60
Non-Recurring Charges	n/a
Passive Bridging Channel Connections, Per Channel Connected	
Monthly Recurring Charge	$0.25
Non-Recurring Charges	n/a

RECEIVED

NOV 0 3 2008

STATE OF ALASKA
REGULATORY COMMISSION OF ALASKA

ARCTIC SLOPE TELEPHONE ASSOCIATION COOPERATIVE
COMPANY SPECIFIC ACCESS SERVICES

14. Rates and Charges (Cont'd)

14.3 Special Access Service (Cont'd)

14.3.2 Voice Grade Service (Cont'd)
Reference Tariff Section 7.4

C. Optional Features And Functions (Cont'd)

2. Conditioning Per Termination

a. C Type	
Monthly Recurring Charge	$6.42
Non-Recurring Charge	n/a
b. Improved Attenuation Distortion	
Monthly Recurring Charge	n/a
Non-Recurring Charge	n/a
c. Improved Envelope Delay Distortion	
Monthly Recurring Charge	n/a
Non-Recurring Charge	n/a
d. Data Capability	
Monthly Recurring Charge	$4.41
Non-Recurring Charge	n/a
e. Telephoto Capability	
Monthly Recurring Charge	$8.04
Non-Recurring Charge	n/a
f. Telephoto Capability (VG11 & VGC)	
Monthly Recurring Charge	n/a
Non-Recurring Charge	n/a
g. Sealing Current	
Monthly Recurring Charge	n/a
Non-Recurring Charge	n/a

RECEIVED

NOV 0 3 2008

STATE OF ALASKA
REGULATORY COMMISSION OF ALASKA

ARCTIC SLOPE TELEPHONE ASSOCIATION COOPERATIVE
COMPANY SPECIFIC ACCESS SERVICES

14. Rates and Charges (Cont'd)

14.3 Special Access Service (Cont'd)

14.3.2 Voice Grade Service (Cont'd)
Reference Tariff Section 7.4

C. Optional Features And Functions (Cont'd)

3. Improved Return Loss For Effective Two-Wire To Four-Wire Transmission Per Termination

Two-Wire, Monthly Recurring Charge	$11.40
Four-Wire, Monthly Recurring Charge	11.40
Non-Recurring Charge	n/a

4. Customer-Specified Receive Level, Per Two-Wire Termination

Monthly Recurring Charge	$7.84
Non-Recurring Charge	n/a

5. Multiplexing, Per Arrangement Voice To Telegraph Grade

Monthly Recurring Charge	$201.54
Non-Recurring Charge	n/a

6. Signaling Capability

Monthly Recurring Charge	
- Per Termination	$11.54
- VG1 – Loop Start Either End	n/a
- VG1 – Ground Start Either End	n/a
- VG2 – Loop Start Closed End Only	n/a
- VG2 – Ground Start to Centrex Station Line Only	n/a
- VG2 – 20HZ Ringdown	n/a
- VG3, VG7 – Loop Start	n/a
- VG3, VG7 – Ground Start	n/a
- VG3, VG7 – E & M	n/a
- VG8, VG9 – Loop Start at Closed End	n/a
- VG8, VG9 – E & M, SF, DX at Open End	n/a
- VG8, VG9 – E & M at Closed End	n/a
Non-Recurring Charge	n/a

RECEIVED

NOV 0 3 2008

STATE OF ALASKA
REGULATORY COMMISSION OF ALASKA

ARCTIC SLOPE TELEPHONE ASSOCIATION COOPERATIVE
COMPANY SPECIFIC ACCESS SERVICES

14. Rates and Charges (Cont'd)

14.3 Special Access Service (Cont'd)

14.3.2 Voice Grade Service (Cont'd)
Reference Tariff Section 7.4

C. Optional Features And Functions (Cont'd)

7. Selective Signaling Arrangement, Per Arrangement

Monthly Recurring Charge	$5.79
Non-Recurring Charge	n/a

8. Transfer Arrangement (Key Activated* or Dial Up)**

Per Four Port Arrangement, Including Control Channel Termination (See Note)

Monthly Recurring Charge	$2.79
Non-Recurring Charge	n/a

Per Five Port Arrangement, Including Control Channel Termination (See Note)

Monthly Recurring Charge	$6.37
Non-Recurring Charge	n/a

9. Public Packet Switching Network (PPSN) Interface Arrangement, Per Arrangement

Monthly Recurring Charge	ICB
Non-Recurring Charge	n/a

* The key activated control channel is rated as a Voice Grade Channel Termination and Channel Mileage, if applicable.

** The Dial-Up option requires the customer to purchase the Controller Arrangement.

Note: An additional Channel Termination Charge will apply whenever a spare channel is configured as a leg to the customer designated premises. Additional channel mileage charges will also apply when the transfer arrangement is not located in the customer designated premises serving wire center.

RECEIVED

NOV 0 3 2008

STATE OF ALASKA
REGULATORY COMMISSION OF ALASKA

ARCTIC SLOPE TELEPHONE ASSOCIATION COOPERATIVE
COMPANY SPECIFIC ACCESS SERVICES

14. Rates and Charges (Cont'd)

14.3 Special Access Service (Cont'd)

14.3.3 Digital Data Service
Reference Tariff Section 7.7

A. Channel Termination Per Termination

Monthly Recurring Charge	
- 2.4 Kbps	$ 71.29
- 4.8 Kbps	71.29
- 9.6 Kbps	71.29
- 19.2 Kbps	71.29
- 56.0 Kbps	71.29
- 64.0 Kbps	71.29
Non-Recurring Charge	344.00

B. Channel Mileage

1. Channel Mileage Facility Per Mile

Monthly Recurring Charge	
- 2.4 Kbps	n/a
- 4.8 Kbps	n/a
- 9.6 Kbps	n/a
- 19.2 Kbps	n/a
- 56.0 Kbps	n/a
- 64.0 Kbps	n/a
Non-Recurring Charge	n/a

2. Channel Mileage Termination per Termination

Monthly Recurring Charge	
- 2.4 Kbps	n/a
- 4.8 Kbps	n/a
- 9.6 Kbps	n/a
- 19.2 Kbps	n/a
- 56.0 Kbps	n/a
- 64.0 Kbps	n/a
Non-Recurring Charge	n/a

RECEIVED

NOV 0 3 2008

STATE OF ALASKA
REGULATORY COMMISSION OF ALASKA

ARCTIC SLOPE TELEPHONE ASSOCIATION COOPERATIVE
COMPANY SPECIFIC ACCESS SERVICES

14. Rates and Charges (Cont'd)

14.3 Special Access Service (Cont'd)

14.3.3 Digital Data Service (Cont'd)
Reference Tariff Section 7.7

C. Optional Features And Functions

1. Bridging, Per Port

Monthly Recurring Charge	$7.00
Non-Recurring Charge	n/a

2. Loop Transfer Arrangement (Key Activated* or Dial Up) Per Four Port Arrangement (See Note)**

Monthly Recurring Charge	$5.54
Non-Recurring Charge	n/a

3. Public Packet Switching Network

a. Interface Arrangement – 9.6 Kbps

Monthly Recurring Charge	ICB
Non-Recurring Charge	n/a

b. Interface Arrangement – 56.0 Kbps

Monthly Recurring Charge	ICB
Non-Recurring Charge	n/a

* The key activiated control channel is rated as a Voice Grade Channel Termination and Channel Mileage, if applicable.

** The Dial Up option requires the customer to purchase the Controller Arrangement.

Note: An additional Channel Termination Charge will apply whenever a spare channel is configured as a leg to the customer designated premises. Additional channel mileage charges will also apply when the transfer arrangement is not located in the customer designated premises serving wire center.

RECEIVED
JUL 13 2009

ARCTIC SLOPE TELEPHONE ASSOCIATION COOPERATIVE
COMPANY SPECIFIC ACCESS SERVICES

14. Rates and Charges (Cont'd)

14.3 Special Access Service (Cont'd)

14.3.3 Digital Data Service (Cont'd)
Reference Tariff Section 7.7

D. Channel Service Unit Per Termination

Monthly Recurring Charge		
- 2.4 Kbps	$27.67	
- 4.8 Kbps	27.67	
- 9.6 Kbps	27.67	
- 56.0 Kbps	27.67	
Non-Recurring Charge	n/a	

14.3.4 High Capacity Service
Reference Tariff Section 7.8

A. Channel Termination Per Termination

Monthly Recurring Charge		
- 1.544 Mbps	$1,093.40	R
- 3.152 Mbps	ICB	
- 6.312 Mbps	ICB	
- 44.736 Mbps	ICB	
- 274.176 Mbps	ICB	
Non-Recurring Charge – 1.544 Mbps	349.00	
Non-Recurring Charge – All Others	ICB	

B. Channel Mileage

1. Facility Per Mile

Monthly Recurring Charge	
- 64.0 Kpbs	$ 3.71
- 1.544 Mbps	17.88
- 3.152 Mbps	ICB
- 6.312 Mbps	ICB
- 44.736 Mbps	123.09
- 274.176 Mbps	ICB
Non-Recurring Charge	n/a

RECEIVED

NOV 0 3 2008

STATE OF ALASKA
REGULATORY COMMISSION OF ALASKA

ARCTIC SLOPE TELEPHONE ASSOCIATION COOPERATIVE
COMPANY SPECIFIC ACCESS SERVICES

14. Rates and Charges (Cont'd)

14.3 Special Access Service (Cont'd)

14.3.4 High Capacity Service (Cont'd)
Reference Tariff Section 7.8

B. Channel Mileage (Cont'd)

2. Per Termination

Monthly Recurring Charge	
- 64.0 Kbps	$37.22
- 1.544 Mbps	88.16
- 3.152 Mbps	ICB
- 6.312 Mbps	ICB
- 44.736 Mbps	491.01
- 274.176 Mbps	ICB
Non-Recurring Charge	n/a

C. Optional Features and Functions

1. Multiplexing Per Arrangement

Monthly Recurring Charge	
- DS4 to DS1	ICB
- DS3 to DS1	$422.63
- DS2 to DS1	ICB
- DS1C to DS1	ICB
- DS1 to Voice*	163.17
- DS1 to DS0	163.17
- DS0 to Subrates – Up to 20 2.4 Kbps Services	347.50
- DS0 to Subrates – Up to 10 4.8 Kbps Services	236.12
- DS0 to Subrates – Up to 5 9.6 Kbps Services	209.39
-Non-Recurring Charge	n/a

* A channel of this DS1 to the Hub can be used for Digital Data Service.

RECEIVED

NOV 0 3 2008

STATE OF ALASKA
REGULATORY COMMISSION OF ALASKA

ARCTIC SLOPE TELEPHONE ASSOCIATION COOPERATIVE
COMPANY SPECIFIC ACCESS SERVICES

14. Rates and Charges (Cont'd)

14.3 Special Access Service (Cont'd)

14.3.4 High Capacity Service (Cont'd)
Reference Tariff Section 7.8

C. Optional Features And Functions (Cont'd)

2. Automatic Loop Transfer, Per Arrangement	
Monthly Recurring Charge	$140.78
Non-Recurring Charge	n/a
3. Transfer Arrangement (Key Activated* or Dial Up) Per Four Port Arrangement, Including Control Channel Termination (See Note)**	
Monthly Recurring Charge	$153.44
Non-Recurring Charge	n/a
4. High Capacity Synchronization	
Monthly Recurring Charge	n/a
Non-Recurring Charge	n/a

* The key activated control channel is rated as a Voice Grade Channel Termination and Channel Mileage, if applicable.

** The Dial Up option requires the customer to purchase the Controller Arrangement.

Note: An additional Channel Termination Charge will apply whenever a spare channel is configured as a leg to the customer designated premises. Additional channel mileage charges will also apply when the transfer arrangement is not located in the customer designated premises serving wire center.

Pursuant to:
U-08-145(1)

Effective: December 20, 2008

Issued: November 3, 2008
Issued By: Arctic Slope Telephone Association Cooperative, Inc.
By: David S. Fauske Title: General Manager

RECEIVED

NOV 0 3 2008

STATE OF ALASKA
REGULATORY COMMISSION OF ALASKA

ARCTIC SLOPE TELEPHONE ASSOCIATION COOPERATIVE
COMPANY SPECIFIC ACCESS SERVICES

14. Rates and Charges (Cont'd)

14.3 Special Access Service (Cont'd)

14.3.4 High Capacity Service (Cont'd)
Reference Tariff Section 7.8

D. Network Channel Terminating Equipment (NCTE),

1. 1.544 Mbps Per Termination (Note)

Monthly Recurring Charge	$79.84
Non-Recurring Charge	n/a

2. Automatic Loop Transfer, Per Termination (Note)

Monthly Recurring Charge	$320.77
Non-Recurring Charge	n/a

14.4 Other Services

14.4.1 Public Packet Data Network

A. Frame Relay Access Service
Reference Tariff Section 12

1. Connections – End User Port (Per Port)

Monthly Recurring Charge	
- 56.0 Kbps	n/a
- 64.0 Kbps	n/a
- 1.544 Mbps	n/a
Non-Recurring Charge	n/a

2. Access Customer Port (Per Port)

Monthly Recurring Charge	
- 1.544 Mbps	n/a
Non-Recurring Charge	n/a

Note 1: NCTE will only be provided under tariff if they existed in the Telephone Company's inventory as of November 18, 1983.

Pursuant to:
U-08-145(1)

Effective: December 20, 2008

Issued: November 3, 2008
Issued By: Arctic Slope Telephone Association Cooperative, Inc.
By: David S. Fauske Title: General Manager

RECEIVED

NOV 0 3 2008

STATE OF ALASKA
REGULATORY COMMISSION OF ALASKA

ARCTIC SLOPE TELEPHONE ASSOCIATION COOPERATIVE
COMPANY SPECIFIC ACCESS SERVICES

14. Rates and Charges (Cont'd)

14.4 Other Services

14.4.1 Public Packet Data Network

A. Frame Relay Access Service
Reference Tariff Section 12

3. Permanent Virtual Connections (PVC)

a. Standard – CIR

Monthly Recurring Charge	
- 8 Kbps	n/a
- 16 Kbps	n/a
- 28 Kbps	n/a
- 32 Kbps	n/a
- 56 Kbps	n/a
- 64 Kbps	n/a
- 128 Kbps	n/a
- 192 Kbps	n/a
- 256 Kbps	n/a
- 384 Kbps	n/a
- 512 Kbps	n/a
- 768 Kbps	n/a
Non-Recurring Charge	n/a

RECEIVED

MAY 17 2013

STATE OF ALASKA
REGULATORY COMMISSION OF ALASKA

ARCTIC SLOPE TELEPHONE ASSOCIATION COOPERATIVE
COMPANY SPECIFIC ACCESS SERVICES

14. Rates and Charges (Cont'd)

14.5 Additional Engineering, Additional Labor And Miscellaneous Service

Reference Tariff Section 9*
Applies to all Services Except Switched Access. (N)
See Section 14.6 for Switched Access Additional Engineering, Labor, and Miscellaneous Services. (N)

14.5.1 Additional Engineering

A. Basic Time, Normally Scheduled Working Hours, Per Engineer
Each Half Hour or Fraction Thereof* $23.80

B. Overtime, Outside of Normally Scheduled Working Hours, Per Engineer
Each Half Hour or Fraction Thereof* $35.71

C. Premium Time, Outside of Scheduled Work Day, Per Engineer
Each Half Hour or Fraction Thereof* $47.61

14.5.2 Additional Labor

A. Installation and Repair

1. **Overtime, Outsite of Normally Scheduled Working Hours on a Scheduled Work Day, Per Technician**
   Each Half Hour or Fraction Thereof* $29.34

2. **Premium Time, Outside of Normally Scheduled Work Day, Per Technician**
   Each Half Hour or Fraction Thereof* $39.12

* A call out of a Telephone Company employee at a time not consecutive with the employee's schedules working period is subject to a minimum charge of four hours.

RECEIVED

NOV 0 3 2008

STATE OF ALASKA
REGULATORY COMMISSION OF ALASKA

ARCTIC SLOPE TELEPHONE ASSOCIATION COOPERATIVE
COMPANY SPECIFIC ACCESS SERVICES

14. Rates and Charges (Cont'd)

14.5 Additional Engineering, Additional Labor And Miscellaneous Service (Cont'd)
Reference Tariff Section 9

14.5.2 Additional Labor

B. Stand-By

1. Basic Time, Normally Scheduled Working Hours, Per Technician
Each Half Hour or Fraction Thereof* $18.16

2. Overtime, Outside of Normally Scheduled Working Hours on a Scheduled Work Day, Per Technician
Each Half Hour or Fraction Thereof* $27.24

3. Premium Time, Outside of Scheduled Work Day, Per Technician
Each Half Hour or Fraction Thereof* $36.32

C. Testing and Maintenance with Other Telephone Companies, or Other Labor

1. Installation and Repair

a. Basic Time, Normally Scheduled Working Hours, Per Technician
Each Half Hour or Fraction Thereof* $19.56

b. Overtime, Outside of Normally Scheduled Working Hours on a Scheduled Work Day, Per Technician
Each Half Hour or Fraction Thereof* $29.34

c. Premium Time, Outside of Scheduled Work Day, Per Technician
Each Half Hour or Fraction Thereof* $39.12

* A call-out of a Telephone Company employee at a time not consecutive with the employee's scheduled working period is subject to a minimum charge of four hours.

RECEIVED

MAY 17 2013

STATE OF ALASKA
REGULATORY COMMISSION OF ALASKA

ARCTIC SLOPE TELEPHONE ASSOCIATION COOPERATIVE
COMPANY SPECIFIC ACCESS SERVICES

14. Rates and Charges (Cont'd)

14.5 Additional Engineering, Additional Labor And Miscellaneous Service (Cont'd)
Reference Tariff Section 9

14.5.2 Additional Labor (Cont'd)

C. Testing And Maintenance with Other Telephone Companies, or Other Labor (Cont'd)

2. Central Office Maintenance

a. Basic Time, Normally Scheduled Working Hours, Per Technician
Each Half Hour or Fraction Thereof* $21.19

b. Overtime, Outside of Normally Scheduled Working Hours on a Scheduled Work Day, Per Technician
Each Half Hour or Fraction Thereof* $31.79

c. Premium Time, Outside of Scheduled Work Day, Per Technician
Each Half Hour or Fraction Thereof* $42.39

(L)

(L)

* A call-out of a Telephone Company employee at a time not consecutive with the employee's scheduled working period is subject to a minimum charge of four hours.

L = Miscellaneous Services relocated to Original Sheet No. ASTAC – 34

RECEIVED

JUN 0 7 2013

STATE OF ALASKA
REGULATORY COMMISSION OF ALASKA

ARCTIC SLOPE TELEPHONE ASSOCIATION COOPERATIVE
COMPANY SPECIFIC ACCESS SERVICES

14. Rates and Charges (Cont'd)

14.5 Additional Engineering, Additional Labor And Miscellaneous Service (Cont'd)
Reference Tariff Section 9

14.5.3 Miscellaneous Services

(L)

(L)

A. Additional Cooperative Acceptance Testing – Special Access (T)

1. Tesing Periods – Each Half Hour or Fraction Thereof
   Basic Time, Overtime* and Premium Time*

   See rates for Additional Labor as set forth in 14.5.2(C).

* A call-out of a Telephone Company employee at a time not consecutive with the employee's scheduled working period is subject to a minimum charge of four hours.

L = Relocated to Original Sheet No. ASTAC – 34

RECEIVED

MAY 1 7 2013

STATE OF ALASKA
REGULATORY COMMISSION OF ALASKA

ARCTIC SLOPE TELEPHONE ASSOCIATION COOPERATIVE
COMPANY SPECIFIC ACCESS SERVICES

14. Rates and Charges (Cont'd)

14.5 Additional Engineering, Additional Labor And Miscellaneous Service (Cont'd)
Reference Tariff Section 9

14.5.3 Miscellaneous Services - Cont'd

B. Additional Manual Testing – Special Access (T)

1. Testing Periods – Each Half Hour Or Fraction Thereof
   Basic Time, Overtime* and Premium Time*

   See rates for Additional Labor as set forth in 14.5.2(C).

C. Maintenance of Service (T)

1. Maintenance of Service Periods – Each Half Hour or Fraction Thereof
   Basic Time, Overtime* and Premium Time*

   See rates for Additional Labor as set forth in 14.5.2(C).

* A call-out of a Telephone Company employee at a time not consecutive with the employee's scheduled working period is subject to a minimum charge of four hours.

RECEIVED

APR 9 2014

STATE OF ALASKA
REGULATORY COMMISSION OF ALASKA

ARCTIC SLOPE TELEPHONE ASSOCIATION COOPERATIVE
COMPANY SPECIFIC ACCESS SERVICES

14. Rates and Charges (Cont'd)

14.6 Additional Engineering, Labor, and Miscellaneous Services – Switched Access Each Half Hour, or Fraction Thereof. Reference Tariff Section 9. (T)

	Rate	
14.6.1 Additional Engineering Periods, Each Half Hour, or Fraction Thereof.		(T)
A. Basic Time, per engineer	$31.03	(N)
B. Overtime, per engineer	$46.55	
C. Premium Time, per engineer	$62.06	
14.6.2 Additional Labor Periods, Each Half Hour, or Fraction Thereof.		
A. Installation or Repair		
1. Overtime, per technician	$47.57*	
2. Premium Time, per technician	$63.42*	
B. Stand by		
1. Basic Time, per technician	$21.18*	
2. Overtime, per technician	$31.77*	
3. Premium Time, per technician	$42.36*	
C. Testing and Maintenance, Installation and Repair		
1. Basic Time, per technician	$31.71	
2. Overtime, per technician	$47.57*	
3. Premium Time, per technician	$63.42*	
D. Central Office Maintenance Technician		
1. Basic Time, per technician	$34.66	
2. Overtime, per technician	$51.99*	
3. Premium Time, per technician	$69.32*	(N)

* A call-out of a Telephone Company employee at a time not consecutive with the employee's scheduled working period is subject to a minimum charge of four hours.

RECEIVED

APR 15 2014

STATE OF ALASKA
REGULATORY COMMISSION OF ALASKA

ARCTIC SLOPE TELEPHONE ASSOCIAITON COOPERATIVE
COMPANY SPECIFIC ACCESS SERVICES

14. Rates and Charges (Cont'd)

14.6 Additional Engineering, Additional Labor And Miscellaneous Service – Switched Access (Cont'd)
Reference Tariff Section 9

14.6.3 Miscellaneous Services

A. Additional Cooperative Acceptance Testing – Switched Access

1. Testing Periods Basic Time, Overtime and Premium Time*
See rates for Additional Labor as set forth in 14.6.2(C).

B. Additional Automatic Testing – Switched Access to First Point of Switching**
Per Test Per Transmission Path

	Rate	AECA Tariff Reference	(T)
1. Gain-Slope Tests	$2.89	9.3.1	(N)
2. C-Notched Noise Tests	$2.89	9.3.1	
3. 1004 Hz Loss	$2.89	9.3.1	
4. C-Message Noise	$2.89	9.3.1	
5. Balance (ret. loss)	$2.89	9.3.1	(N)

C. Additional Manual Testing – Switched Access to First Point of Switching (D)

Additional Tests – Per Technician – Each Half Hour or Fraction Thereof
1. Gain-Slope Tests
2. C-Notched Noise Tests
3. Any Other Agreed to Tests

See rates for Additional Labor as set for in 14.6.2(C).

* A call-out of a Telephone Company employee at a time not consecutive with the employee's scheduled working period is subject to a minimum charge of four hours.

** 1004 Hz Loss, C-Message Noise and Balance are non-chargeable routine tests; however, they may be requested on an as needed or more than routine schedule basis, in which case the charges herein apply.

RECEIVED

JUL 0 6 2010

STATE OF ALASKA
REGULATORY COMMISSION OF ALASKA

CORDOVA TELEPHONE COOPERATIVE, INC.
COMPANY SPECIFIC ACCESS SERVICES
RATES AND CHARGES

Cordova Telephone Cooperative, Inc.
P.O. Box 459
Cordova, AK 99574

RECEIVED
JUN 21 2021
STATE OF ALASKA
REGULATORY COMMISSION OF ALASKA

CORDOVA TELEPHONE COOPERATIVE, INC. SPECIFIC ACCESS SERVICES

Index to Rates and Charges

14.1	Common Line Access Service		CTC-7
	14.1.1	Carrier Common Line Access Service	CTC-11
	14.1.2	Recurring Charge 14.1.2.a Carrier Common Line 14.1.2.b Network Access Fee	CTC-11
14.2	Switched Access Service		CTC-12
	14.2.1	Non-Recurring Charges A. Access Order B. Service Date Change Charge C. Design Change Charge D. Miscellaneous Service Order Charge E. Transport – Installation F. Interim NXX Translation G. Telecommunications Service Priority Charge	CTC-12
	14.2.2	Recurring Charges A. Common Transport per Minute of Use B. Dedicated Transport C. Local Switching D. Information Surcharge E. TSP Database Charge F. Toll Free Access Service Queries	CTC-13 (T)
	14.2.3	Equal Access Recovery Charge	CTC-14
	14.2.4	Presubscription Change Charge	CTC-14
	14.2.5	Assumed Minutes of Use	CTC-14

RECEIVED
JUL 0 6 2010
STATE OF ALASKA
REGULATORY COMMISSION OF ALASKA

CORDOVA TELEPHONE COOPERATIVE, INC. SPECIFIC ACCESS SERVICES

Index to Rates and Charges - (Cont'd)

14.3	Special Access Service	CTC-15
	14.3.1a Surcharge for Special Access Service	CTC-15
	14.3.1b Telecommunications Service Priority Charge	CTC-15
	14.3.1c Special Access Ordering A. Access Order Charge B. Service Date Change Charge C. Design Change Charge E. Miscellaneous Service Order Charge	CTC-15
14.3.2	Voice Grade Service	CTC-16
	A. Channel Termination	CTC-16
	B. Channel Mileage	CTC-16
	C. Optional Features and Functions	CTC-17
	1. Bridging	CTC-17
	2. Conditioning per Termination	CTC-19
	3. Improved Return Loss for Effective Two-Wire to Four-Wire Transmission	CTC-20
	4. Customer-Specified Receive Level	CTC-20
	5. Multiplexing, per Arrangement Voice Grade to Telegraph Grade	CTC-20
	6. Signaling Capability	CTC-20
	7. Selective Signaling Arrangement	CTC-21
	8. Transfer Arrangement	CTC-21
	9. Public Packet Switching Network (PPSN)	CTC-21

RECEIVED

JUL 0 6 2010

STATE OF ALASKA
REGULATORY COMMISSION OF ALASKA

CORDOVA TELEPHONE COOPERATIVE, INC. SPECIFIC ACCESS SERVICES

Index to Rates and Charges - (Cont'd)

14.3 Special Access Service

14.3.3 Digital Data Service CTC-22

A. Channel Termination, per Termination CTC-22

B. Channel Mileage CTC-22
1. Channel Mileage Facility, per Mile
2 Channel Mileage Termination, per Termination

C. Optional Features and Functions CTC-23
1. Bridging, per Port
2. Loop Transfer Arrangement
3. Public Packet Switching Network Interface Arrangement

D. Channel Service Unit per Termination CTC-24

RECEIVED

JUL 0 6 2010

STATE OF ALASKA
REGULATORY COMMISSION OF ALASKA

CORDOVA TELEPHONE COOPERATIVE, INC. SPECIFIC ACCESS SERVICES

Index to Rates and Charges - (Cont'd)

14.3 Special Access Service

14.3.4 High Capacity Service CTC-24

A. Channel Termination per Termination CTC-24

B. Channel Mileage CTC-24

C. Optional Features and Functions CTC-25
1. Multiplexing
2. Automatic Loop Transfer
3. Transfer Arrangement
4. High Capacity Synchronization

D. Network Channel Terminating Equipment (NCTE) CTC-27
1. 1.544 Mbps per Termination
2. Automatic Loop Transer

14.4 Other Services CTC-27

14.4.1 Public Packet Data Network CTC-27

A. Frame Relay Access Service CTC-27
1. Connections
2. Access Customer Port
3 Permanent Virtual Connections

RECEIVED

JUL 0 6 2010

STATE OF ALASKA
REGULATORY COMMISSION OF ALASKA

CORDOVA TELEPHONE COOPERATIVE, INC. SPECIFIC ACCESS SERVICES

Index to Rates and Charges - (Cont'd)

14.5	Additional Engineering, Additional Labor And Miscellaneous Service		CTC-29
	14.5.1	Additional Engineering	CTC-29
	14.5.2	Additional Labor	CTC-29
		A. Installation and Repair	CTC-29
		B. Stand-By	CTC-30
		C. Testing and Maintenance with Other Telephone Companies or Other Labor	CTC-30
	14.5.3	Miscellaneous Services	CTC-31
		A. Additional Cooperative Acceptance Testing – Switched Access	CTC-31
		B. Additional Automatic Testing – Switched Access to First Point of Switching	CTC-32
		C. Additional Manual Testing – Switched Access to First Point of Switching	CTC-32
		D. Additional Cooperative Acceptance Testing – Special Access	CTC-32
		E. Additional Manual Testing - Special Access	CTC-33
		F. Maintenance of Service	CTC-33

RECEIVED

DEC 1 8 2018

STATE OF ALASKA
REGULATORY COMMISSION OF ALASKA

CORDOVA TELEPHONE COOPERATIVE, INC. SPECIFIC ACCESS SERVICES **(T)**

14. Rates and Charges

14.1 Carrier Common Line Access Service (T)

A. General Description

Carrier Common Line Access provides for the use of CTC's common lines by interexchange carriers (IXC) for access to CTC's end users to furnish intrastate service.

Carrier Common Line Access is provided where CTC's end users subscribe to local exchange telephone service.

RECEIVED

DEC 1 8 2018

STATE OF ALASKA
REGULATORY COMMISSION OF ALASKA

CORDOVA TELEPHONE COOPERATIVE, INC. SPECIFIC ACCESS SERVICES **(T)**

14. Rates and Charges

14.1 Carrier Common Line Access Service (Cont'd) (T)

B. Limitations

1. A telephone number is not provided with Carrier Common Line Access.

2. Detail billing is not provided for Carrier Common Line Access.

3. Directory listings are not included in the rates and charges for Carrier Common Line Access.

4. Intercept arrangements are not included in the rates and charges for Carrier Common Line Access.

C. Undertaking of CTC

CTC will provide the use of CTC's common lines by an IXC for access to end users. The procedure for recovering the Carrier Common Line revenue requirement are set forth in these rules and regulations.

D. Obligations of the Customer

1. Any switched access service associated with Carrier Common Line Access shall be ordered under other sections of this tariff.

2. The IXC facilities at the premises of the ordering IXC shall provide the necessary on-hook and off-hook supervision.

RECEIVED

DEC 1 8 2018

STATE OF ALASKA
REGULATORY COMMISSION OF ALASKA

CORDOVA TELEPHONE COOPERATIVE, INC. SPECIFIC ACCESS SERVICES **(T)**

14. Rates and Charges

14.1 Carrier Common Line Access Service (Cont'd)

(T)

E. Rate Regulation

1. The Carrier Common Line Access Charge will be billed as Essential **(N)** Network Support to the Alaska Universal Service Administrative **(N)** Company (AUSAC) under this tariff in accordance with the regulations set forth below.

2. Annual Essential Network Support (ENS) is an amount equal to (i) the **(D)(N)** amount of carrier common line support received for the year ended December 31, 2016, plus (ii) the amount of carrier of last resort support received for the year ended December 31, 2016. The ENS amount is frozen at that level. The monthly rate will be determined by dividing the annual amount by twelve.

   a. The Company will continue to use the frozen Essential Network Support amount, to be recoverd from AUSAC pursuant to this tariff, in calculating the monthly ENS payable under this tariff until it is superseded by a subsequent order of the RCA. **(D)(N)**

RECEIVED

JUN 1 5 2011

STATE OF ALASKA
REGULATORY COMMISSION OF ALASKA

COMPANY SPECIFIC ACCESS SERVICES

14. Rates and Charges

14.1 Common Line Access Service (Cont'd)

E. Rate Regulation

(D)

(D)

(D) Carrier and Area Specific Bulk Billing rules and regulations 2.c-h are removed per R-08-003(9)

RECEIVED

DEC 1 8 2018

STATE OF ALASKA
REGULATORY COMMISSION OF ALASKA

CORDOVA TELEPHONE COOPERATIVE, INC. SPECIFIC ACCESS SERVICES **(T)**

14. Rates and Charges

14.1 Carrier Common Line Access Service (Cont'd) (T)

14.1.1 Carrier Common Line Access Service

14.1.2a Carrier Common Line Charge (C)
Reference Tariff Section 14.1

Essential Network Support		**(D)(N)**
Monthly Recurring Charge	$43,428	**(N)**

14.1.2.b Network Access Fee (NAF)
Reference Tariff Section 4.1

Monthly Recurring Charge	$5.75

D= Deleted Carrier Common Line Charge, Per Line

RECEIVED
SEP 22 2016
STATE OF ALASKA
REGULATORY COMMISSION OF ALASKA

CORDOVA TELEPHONE COOPERATIVE, INC. SPECIFIC ACCESS SERVICES

14. Rates and Charges (Cont'd)

14.2 Switched Access Service

14.2.1 Non-Recurring Charges

A. Access Order, per order Reference AECA Tariff Section 5.2	$ 86.00	
B. Service Date Change Charge, per order Reference AECA Tariff Section 5.7	$ 60.00	
C. Design Change Charge, per order Reference AECA Tariff Section 5.7	$ 84.00	
D. Miscellaneous Service Order Charge, per occurrence Reference AECA Tariff Section 5.7	$123.00	
E. Transport – Installation Per Entrance Facility Reference AECA Tariff Section 6.8		
- Voice Grade Two Wire	$933.82	
- Voice Grade Four Wire	$933.82	
- High Capacity DS1	$684.81	
- High Capacity DS3	$923.46	
- Synchronous Optical Channel OC3	$747.05	
- Synchronous Optical Channel OC12	$747.05	
F. Transport-Trunk Activation Per Order Reference AECA Tariff Section 6.8 Per 24 Trunks Activated or Fraction Thereof, on per order basis	$952.48	(I)
G. Interim NXX Translation Per Order Reference AECA Tariff Section 6.8	$456.54	
H. Telecommunications Service Priority Charge per Service Arranged Reference AECA Tariff Section 9.3	$ 54.63	

RECEIVED
JUN 14 2023
STATE OF ALASKA
REGULATORY COMMISSION OF ALASKA

CORDOVA TELEPHONE COOPERATIVE, INC. SPECIFIC ACCESS SERVICE

14. Rates and Charges (Cont'd)

14.2 Switched Access Service

14.2.2 Recurring Charges

A. Entrance Facility Per Termination

Reference AECA Tariff Section 6.2

- Voice Grade Two Wire	$ 158.20
- Voice Grade Four Wire	$ 253.15
- High Capacity DS1	$ 771.24
- High Capacity DS3	$ 7,041.95
- Synchronous Optical Channel OC3	$ 7,180.69
- Synchronous Optical Channel OC12	$ 7,666.66

B. Direct Trunked Transport

Reference AECA Tariff Section 6.2	Per Mile	Per Termination
- Voice Grade Two Wire	$ 11.26	$ 113.26
- Voice Grade Four Wire	$ 11.26	$ 113.26
- High Capacity DS1	$ 52.84	$ 274.15
- High Capacity DS3	$ 460.28	$ 1,760.45
- Synchronous Optical Channel OC3	$ 492.72	$ 1,832.99
- Synchronous Optical Channel OC12	$ 618.44	$ 3,991.00

C. Multiplexing, Per Arrangement

Reference AECA Tariff Section 6.2	DS3 to DS1	DS1 to Voice
	$1,606.33	$620.15

D. Local Switching per Access Minute**

Reference AECA Tariff Section 6.8	Premium	Non-Premium
Originating Non-Toll Free	n/a	n/a
Originating Toll Free Rate	n/a	n/a
Terminating Rate**	$0.00	$.000

E. Information Surcharge per 100 Minutes

Reference AECA Tariff Section 6.8	Premium	Non-Premium
Originating Non- Toll Free	n/a	n/a
Originating Toll Free	n/a	n/a
Terminating **	n/a	n/a

F. Toll Free Data Base Access Service Queries

Reference AECA Tariff Section 6.8

a. Basic per Query	$0.0002	(R)
b. Basic with Vertical Feature per Query	$0.0002	(R)

** The composite Terminating Local Switching rates shown above include the Terminating Information Surcharge rate element.

RECEIVED

MAR 18 2014

STATE OF ALASKA
REGULATORY COMMISSION OF ALASKA

CORDOVA TELEPHONE COOPERATIVE, INC. SPECIFIC ACCESS SERVICES

14. Rates and Charges (Cont'd)

14.2 Switched Access Service (Cont'd) (D)

14.2.3 Equal Access Recovery Charge
Reference Tariff Section 6.8
Per Presubscribed Equal Access Line n/a

14.2.4 Presubscription Interexchange Carrier (PIC) (T)
Change Charge - Per Telephone Exchange Service Line or Trunk for each interLATA PIC change: (N)
Reference Tariff Section 9.3

1) Submitted using manual methods	$5.50
2) Submitted using electronic methods	$1.25
3) Submitted using manual methods when both the interLATA PIC and intraLATA PIC selections are changed simultaneously	$2.75
4) Submitted using electronic methods when Both the interLATA PIC and intraLATA PIC Selections are changed simultaneously	$0.63

(N)

14.2.5 Assumed Minutes Of Use

		Assumed Minutes Per Month
A.	Feature Group A, Two Way Calling (1,510 Originating, 2,685 Terminating)	4,195
B.	Feature Group A, Originating Only	1,510
C.	Feature Group A, Terminating Only	2,685
D.	Feature Group B, Two Way Calling (3,132 Originating, 5,568 Terminating)	8,700
E.	Feature Group B, Originating Only	3,132
F.	Feature Group B, Terminating Only	5,568

RECEIVED

JUL 0 6 2010

STATE OF ALASKA
REGULATORY COMMISSION OF ALASKA

CORDOVA TELEPHONE COOPERATIVE, INC. SPECIFIC ACCESS SERVICES

14. Rates and Charges (Cont'd)

14.3 Special Access Service

14.3.1a Surcharge For Special Access Service
Reference Tariff Section 7.3

Per Voice Grade Equivalent	$25.00

14.3.1b Telecommunications Service Priority Charge
Reference Tariff Section 9.3

Per Circuit – Monthly Recurring Charge	$1.00
Per Circuit – Non-Recurring Charge	$55.00

14.3.1c Special Access Ordering
Reference Tariff Section 5.2 and 5.8

A. Access Order Charge per Order $130.00

B. Service Date Change Charge $35.00

A Service Date Change Charge will apply, on a per order per occurrence basis, for each service date changed. The Access Order Charge as specified in 14.3.1c(A) preceding does not apply.

C. Design Change Charge $35.00

The Design Change Charge will apply on a per order per occurrence basis, for each order requiring design change.

D. Miscellaneous Service Order Charge per Occurrence $35.00

RECEIVED

JUL 0 6 2010

STATE OF ALASKA
REGULATORY COMMISSION OF ALASKA

CORDOVA TELEPHONE COOPERATIVE, INC. SPECIFIC ACCESS SERVICES

14. Rates and Charges (Cont'd)

14.3 Special Access Service (Cont'd)

14.3.2 Voice Grade Service
Reference Tariff Section 7.4

A. Channel Termination Per Termination*

Two-Wire, Monthly Recurring Charge	$285.85
Four-Wire, Monthly Recurring Charge	457.40
Non-Recurring Charge	289.00

B. Channel Mileage

1. Channel Mileage Facility

Two-Wire, Monthly Recurring Charge per Mile	n/a
Four-Wire, Monthly Recurring Charge per Mile	n/a

2. Channel Mileage Termination Per Termination

Two-Wire, Monthly Recurring Charge	n/a
Four-Wire Monthly Recurring Charge	n/a

RECEIVED
JUL 0 6 2010
STATE OF ALASKA
REGULATORY COMMISSION OF ALASKA

CORDOVA TELEPHONE COOPERATIVE, INC. SPECIFIC ACCESS SERVICES

14. Rates and Charges (Cont'd)

14.3 Special Access Service (Cont'd)

14.3.2 Voice Grade Service
Reference Tariff Section 7.4

C. Optional Features And Functions

1. Bridging

a. Voice Bridging, Per Port

Two-Wire, Monthly Recurring Charge	$5.58
Four-Wire, Monthly Recurring Charge	5.58
Non-Recurring Charge	n/a

b. Data Bridging, Per Port

Two-Wire, Monthly Recurring Charge	$5.58
Four-Wire, Monthly Recurring Charge	5.58
Non-Recurring Charge	n/a

c. Telephoto Bridging, Per Port

Two-Wire, Monthly Recurring Charge	$5.58
Four-Wire, Monthly Recurring Charge	$5.58
Non-Recurring Charge	n/a

RECEIVED
JUL 0 6 2010
STATE OF ALASKA
REGULATORY COMMISSION OF ALASKA

14. Rates and Charges (Cont'd)

14.3 Special Access Service (Cont'd)

14.3.2 Voice Grade Service (Cont'd)
Reference Tariff Section 7.4

C. Optional Features And Functions (Cont'd)

1. Bridging (Cont'd)

d. Dataphone Select-A-Station

Sequential Arrangement, Ports per Channel Connected	
Two-Wire, Monthly Recurring Charge	$ 19.04
Four-Wire, Monthly Recurring Charge	100.99
Non-Recurring Charge	n/a
Addressable Arrangement, Ports Per Channel Connected	
Two-Wire, Monthly Recurring Charge	$20.38
Four-Wire, Monthly Recurring Charge	88.20
Non-Recurring Charge	n/a

e. Telemetry And Alarm Bridging

Active Bridging Channel Connections, Per Channel Connected	
Split Band, Monthly Recurring Charge	$7.63
Summation, Monthly Recurring Charge	2.98
Non-Recurring Charges	n/a
Passive Bridging Channel Connections, Per Channel Connected	
Monthly Recurring Charge	$0.21
Non-Recurring Charges	n/a

RECEIVED

JUL 0 6 2010

STATE OF ALASKA
REGULATORY COMMISSION OF ALASKA

CORDOVA TELEPHONE COOPERATIVE, INC. SPECIFIC ACCESS SERVICES

14. Rates and Charges (Cont'd)

14.3 Special Access Service (Cont'd)

14.3.2 Voice Grade Service (Cont'd)
Reference Tariff Section 7.4

C. Optional Features And Functions (Cont'd)

2. Conditioning Per Termination

a. C Type	
Monthly Recurring Charge	$6.18
Non-Recurring Charge	n/a
b. Improved Attenuation Distortion	
Monthly Recurring Charge	n/a
Non-Recurring Charge	n/a
c. Improved Envelope Delay Distortion	
Monthly Recurring Charge	n/a
Non-Recurring Charge	n/a
d. Data Capability	
Monthly Recurring Charge	$4.25
Non-Recurring Charge	n/a
e. Telephoto Capability	
Monthly Recurring Charge	$7.74
Non-Recurring Charge	n/a
f. Telephoto Capability (VG11 & VGC)	
Monthly Recurring Charge	n/a
Non-Recurring Charge	n/a
g. Sealing Current	
Monthly Recurring Charge	n/a
Non-Recurring Charge	n/a

RECEIVED
JUL 0 6 2010
STATE OF ALASKA
REGULATORY COMMISSION OF ALASKA

CORDOVA TELEPHONE COOPERATIVE, INC. SPECIFIC ACCESS SERVICES

14. Rates and Charges (Cont'd)

14.3 Special Access Service (Cont'd)

14.3.2 Voice Grade Service (Cont'd)
Reference Tariff Section 7.4

C. Optional Features And Functions (Cont'd)

3. Improved Return Loss For Effective Two-Wire To Four-Wire Transmission Per Termination

Two-Wire, Monthly Recurring Charge	$10.98
Four-Wire, Monthly Recurring Charge	10.98
Non-Recurring Charge	n/a

4. Customer-Specified Receive Level, Per Two-Wire Termination

Monthly Recurring Charge	$7.55
Non-Recurring Charge	n/a

5. Multiplexing, Per Arrangement Voice To Telegraph Grade

Monthly Recurring Charge	$194.07
Non-Recurring Charge	n/a

6. Signaling Capability

Monthly Recurring Charge	
- Per Termination	$11.11
- VG1 – Loop Start Either End	n/a
- VG1 – Ground Start Either End	n/a
- VG2 – Loop Start Closed End Only	n/a
- VG2 – Ground Start to Centrex Station Line Only	n/a
- VG2 – 20HZ Ringdown	n/a
- VG3, VG7 – Loop Start	n/a
- VG3, VG7 – Ground Start	n/a
- VG3, VG7 – E & M	n/a
- VG8, VG9 – Loop Start at Closed End	n/a
- VG8, VG9 – E & M, SF, DX at Open End	n/a
- VG8, VG9 – E & M at Closed End	n/a
Non-Recurring Charge	n/a

RECEIVED
JUL 0 6 2010
STATE OF ALASKA
REGULATORY COMMISSION OF ALASKA

CORDOVA TELEPHONE COOPERATIVE, INC. SPECIFIC ACCESS SERVICES

14. Rates and Charges (Cont'd)

14.3 Special Access Service (Cont'd)

14.3.2 Voice Grade Service (Cont'd)
Reference Tariff Section 7.4

C. Optional Features And Functions (Cont'd)

7. Selective Signaling Arrangement, Per Arrangement

Monthly Recurring Charge	$5.58
Non-Recurring Charge	n/a

8. Transfer Arrangement (Key Activated* or Dial Up)**

Per Four Port Arrangement, Including Control Channel Termination (See Note)

Monthly Recurring Charge	$2.69
Non-Recurring Charge	n/a

Per Five Port Arrangement, Including Control Channel Termination (See Note)

Monthly Recurring Charge	$6.13
Non-Recurring Charge	n/a

9. Public Packet Switching Network (PPSN) Interface Arrangement, Per Arrangement

Monthly Recurring Charge	ICB
Non-Recurring Charge	n/a

* The key activated control channel is rated as a Voice Grade Channel Termination and Channel Mileage, if applicable.

** The Dial-Up option requires the customer to purchase the Controller Arrangement.

Note. An additional Channel Termination Charge will apply whenever a spare channel is configured as a leg to the customer designated premises. Additional channel mileage charges will also apply when the transfer arrangement is not located in the customer designated premises serving wire center.

RECEIVED

JUL 0 6 2010

STATE OF ALASKA
REGULATORY COMMISSION OF ALASKA

CORDOVA TELEPHONE COOPERATIVE, INC. SPECIFIC ACCESS SERVICES

14. Rates and Charges (Cont'd)

14.3 Special Access Service (Cont'd)

14.3.3 Digital Data Service
Reference Tariff Section 7.7

A. Channel Termination Per Termination

Monthly Recurring Charge	
- 2.4 Kbps	$293.50
- 4.8 Kbps	293.50
- 9.6 Kbps	293.50
- 19.2 Kbps	293.50
- 56.0 Kbps	293.50
- 64.0 Kbps	293.50
Non-Recurring Charge	288.00

B. Channel Mileage

1. Channel Mileage Facility Per Mile

Monthly Recurring Charge	
- 2.4 Kbps	n/a
- 4.8 Kbps	n/a
- 9.6 Kbps	n/a
- 19.2 Kbps	n/a
- 56.0 Kbps	n/a
- 64.0 Kbps	n/a
Non-Recurring Charge	n/a

2. Channel Mileage Termination per Termination

Monthly Recurring Charge	
- 2.4 Kbps	n/a
- 4.8 Kbps	n/a
- 9.6 Kbps	n/a
- 19.2 Kbps	n/a
- 56.0 Kbps	n/a
- 64.0 Kbps	n/a
Non-Recurring Charge	n/a

RECEIVED
JUL 0 6 2010
STATE OF ALASKA
REGULATORY COMMISSION OF ALASKA

CORDOVA TELEPHONE COOPERATIVE, INC. SPECIFIC ACCESS SERVICES

14. Rates and Charges (Cont'd)

14.3 Special Access Service (Cont'd)

14.3.3 Digital Data Service (Cont'd)
Reference Tariff Section 7.7

C. Optional Features And Functions

1. Bridging, Per Port

Monthly Recurring Charge	$6.74
Non-Recurring Charge	n/a

2. Loop Transfer Arrangement (Key Activated* or Dial Up) Per Four Port Arrangement (See Note)**

Monthly Recurring Charge	$5.33
Non-Recurring Charge	n/a

3. Public Packet Switching Network

a. Interface Arrangement – 9.6 Kbps

Monthly Recurring Charge	ICB
Non-Recurring Charge	n/a

b. Interface Arrangement – 56.0 Kbps

Monthly Recurring Charge	ICB
Non-Recurring Charge	n/a

* The key activiated control channel is rated as a Voice Grade Channel Termination and Channel Mileage, if applicable.

** The Dial Up option requires the customer to purchase the Controller Arrangement.

Note: An additional Channel Termination Charge will apply whenever a spare channel is configured as a leg to the customer designated premises. Additional channel mileage charges will also apply when the transfer arrangement is not located in the customer designated premises serving wire center.

RECEIVED

JUL 0 6 2010

STATE OF ALASKA
REGULATORY COMMISSION OF ALASKA

CORDOVA TELEPHONE COOPERATIVE, INC. SPECIFIC ACCESS SERVICES

14. Rates and Charges (Cont'd)

14.3 Special Access Service (Cont'd)

14.3.3 Digital Data Service (Cont'd)
Reference Tariff Section 7.7

D. Channel Service Unit Per Termination

Monthly Recurring Charge	
- 2.4 Kbps	$26.64
- 4.8 Kbps	26.64
- 9.6 Kbps	26.64
- 56.0 Kbps	26.64
Non-Recurring Charge	n/a

14.3.4 High Capacity Service
Reference Tariff Section 7.8

A. Channel Termination Per Termination

Monthly Recurring Charge	
- 1.544 Mbps	$681.15
- 3.152 Mbps	ICB
- 6.312 Mbps	ICB
- 44.736 Mbps	ICB
- 274.176 Mbps	ICB
Non-Recurring Charge – 1.544 Mbps	281.00
Non-Recurring Charge – All Others	ICB

B. Channel Mileage

1. Facility Per Mile

Monthly Recurring Charge	
- 64.0 Kpbs	$ 3.56
- 1.544 Mbps	17.22
- 3.152 Mbps	ICB
- 6.312 Mbps	ICB
- 44.736 Mbps	118.53
- 274.176 Mbps	ICB
Non-Recurring Charge	n/a

RECEIVED
JUL 0 6 2010
STATE OF ALASKA
REGULATORY COMMISSION OF ALASKA

CORDOVA TELEPHONE COOPERATIVE, INC. SPECIFIC ACCESS SERVICES

14. Rates and Charges (Cont'd)

14.3 Special Access Service (Cont'd)

14.3.4 High Capacity Service (Cont'd)
Reference Tariff Section 7.8

B. Channel Mileage (Cont'd)

2. Per Termination

Monthly Recurring Charge	
- 64.0 Kbps	$ 35.79
- 1.544 Mbps	84.89
- 3.152 Mbps	ICB
- 6.312 Mbps	ICB
- 44.736 Mbps	472.81
- 274.176 Mbps	ICB
Non-Recurring Charge	n/a

C. Optional Features and Functions

1. Multiplexing Per Arrangement

Monthly Recurring Charge	
- DS4 to DS1	ICB
- DS3 to DS1	$406.96
- DS2 to DS1	ICB
- DS1C to DS1	ICB
- DS1 to Voice*	157.12
- DS1 to DS0	157.12
- DS0 to Subrates – Up to 20 2.4 Kbps Services	334.62
- DS0 to Subrates – Up to 10 4.8 Kbps Services	227.37
- DS0 to Subrates – Up to 5 9.6 Kbps Services	201.63
-Non-Recurring Charge	n/a

* A channel of this DS1 to the Hub can be used for Digital Data Service.

RECEIVED

JUL 0 6 2010

STATE OF ALASKA
REGULATORY COMMISSION OF ALASKA

CORDOVA TELEPHONE COOPERATIVE, INC. SPECIFIC ACCESS SERVICES

14. Rates and Charges (Cont'd)

14.3 Special Access Service (Cont'd)

14.3.4 High Capacity Service (Cont'd)
Reference Tariff Section 7.8

C. Optional Features And Functions (Cont'd)

2. Automatic Loop Transfer, Per Arrangement

Monthly Recurring Charge	$135.56
Non-Recurring Charge	n/a

3. Transfer Arrangement (Key Activated* or Dial Up) Per Four Port Arrangement, Including Control Channel Termination (See Note)**

Monthly Recurring Charge	$147.75
Non-Recurring Charge	n/a

4. High Capacity Synchronization

Monthly Recurring Charge	n/a
Non-Recurring Charge	n/a

* The key activated control channel is rated as a Voice Grade Channel Termination and Channel Mileage, if applicable.

** The Dial Up option requires the customer to purchase the Controller Arrangement.

Note: An additional Channel Termination Charge will apply whenever a spare channel is configured as a leg to the customer designated premises. Additional channel mileage charges will also apply when the transfer arrangement is not located in the customer designated premises serving wire center.

RECEIVED
JUL 0 6 2010
STATE OF ALASKA
REGULATORY COMMISSION OF ALASKA

14. Rates and Charges (Cont'd)

14.3 Special Access Service (Cont'd)

14.3.4 High Capacity Service (Cont'd)

Reference Tariff Section 7.8

D. Network Channel Terminating Equipment (NCTE),

1. 1.544 Mbps Per Termination (Note)

Monthly Recurring Charge	$76.88
Non-Recurring Charge	n/a

2. Automatic Loop Transfer, Per Termination (Note)

Monthly Recurring Charge	$308.88
Non-Recurring Charge	n/a

14.4 Other Services

14.4.1 Public Packet Data Network

A. Frame Relay Access Service

Reference Tariff Section 12

1. Connections – End User Port (Per Port)

Monthly Recurring Charge	
- 56.0 Kbps	n/a
- 64.0 Kbps	n/a
- 1.544 Mbps	n/a
Non-Recurring Charge	n/a

2. Access Customer Port (Per Port)

Monthly Recurring Charge	
- 1.544 Mbps	n/a
Non-Recurring Charge	n/a

Note 1: NCTE will only be provided under tariff if they existed in the Telephone Company's inventory as of November 18, 1983.

RECEIVED

JUL 0 6 2010

STATE OF ALASKA
REGULATORY COMMISSION OF ALASKA

CORDOVA TELEPHONE COOPERATIVE, INC. SPECIFIC ACCESS SERVICES

14. Rates and Charges (Cont'd)

14.4 Other Services

14.4.1 Public Packet Data Network

A. Frame Relay Access Service
Reference Tariff Section 12

3. Permanent Virtual Connections (PVC)

a. Standard – CIR

Monthly Recurring Charge	
- 8 Kbps	n/a
- 16 Kbps	n/a
- 28 Kbps	n/a
- 32 Kbps	n/a
- 56 Kbps	n/a
- 64 Kbps	n/a
- 128 Kbps	n/a
- 192 Kbps	n/a
- 256 Kbps	n/a
- 384 Kbps	n/a
- 512 Kbps	n/a
- 768 Kbps	n/a
Non-Recurring Charge	n/a

RECEIVED

MAR 18 2014

STATE OF ALASKA
REGULATORY COMMISSION OF ALASKA

CORDOVA TELEPHONE COOPERATIVE, INC. SPECIFIC ACCESS SERVICES

14. Rates and Charges (Cont'd)

14.5 Additional Engineering, Additional Labor and Miscellaneous Service
Reference AECA Tariff Section 9
As applies to:

	Special Access	Switched Access	
			(D)
14.5.1 Additional Engineering			
A. Basic Time, Normally Scheduled Working Hours, Per Engineer Each Half Hour or Fraction Thereof	$23.80	$31.03	(N)
B. Overtime, Outside of Normally Scheduled Working Hours, Per Engineer Each Half Hour or Fraction Thereof	$35.71	$46.55	(N)
C. Premium Time, Outside of Scheduled Work Day, Per Engineer Each Half Hour or Fraction Thereof	$47.61	$62.06	(N)
14.5.2 Additional Labor			
A. Installation and Repair			
1. Overtime, Outside of Normally Scheduled Working Hours, Per Technician Each Half Hour or Fraction Thereof*	$29.34	$47.57	(N)
2. Premium Time, Outside of Scheduled Work Day, Per Technician Each Half Hour or Fraction Thereof*	$39.12	$63.42	(N)

* A call out of a CTC employee at a time not consecutive with the employee's schedules working period is subject to a minimum charge of four hours.

RECEIVED

MAR 18 2014

STATE OF ALASKA
REGULATORY COMMISSION OF ALASKA

CORDOVA TELEPHONE COOPERATIVE, INC. COMPANY SPECIFIC ACCESS SERVICES

14. Rates and Charges (Cont'd)

14.5 Additional Engineering, Additional Labor And Miscellaneous Service (Cont'd)
Reference Tariff Section 9

14.5.2 Additional Labor

	Special Access	Switched Access	
			(D)
B. Stand-By			
1. Basic Time, Normally Scheduled Working Hours, Per Technician			
Each Half Hour or Fraction Thereof*	$18.16	$21.18	(N)
2. Overtime, Outside of Normally Scheduled Working Hours on a Scheduled Work Day, Per Technician			
Each Half Hour or Fraction Thereof*	$27.24	$31.77	(N)
3. Premium Time, Outside of Scheduled Work Day, Per Technician			
Each Half Hour or Fraction Thereof*	$36.32	$42.36	(N)
C. Testing and Maintenance with Other Telephone Companies, or Other Labor			
1. Installation and Repair			
a. Basic Time, Normally Scheduled Working Hours, Per Technician			
Each Half Hour or Fraction Thereof*	$19.56	$31.71	(N)
b. Overtime, Outside of Normally Scheduled Working Hours on a Scheduled Work Day, Per Technician			
Each Half Hour or Fraction Thereof*	$29.34	$47.57	(N)
c. Premium Time, Outside of Scheduled Work Day, Per Technician			
Each Half Hour or Fraction Thereof*	$43.86	$63.42	(N)

* A call-out of a CTC employee at a time not consecutive with the employee's scheduled working period is subject to a minimum charge of four hours.

RECEIVED

MAR 18 2014

STATE OF ALASKA
REGULATORY COMMISSION OF ALASKA

CORDOVA TELEPHONE COOPERATIVE, INC. SPECIFIC ACCESS SERVICES

14. Rates and Charges (Cont'd)

14.5 Additional Engineering, Additional Labor And Miscellaneous Service (Cont'd)
Reference Tariff Section 9

14.5.2 Additional Labor (Cont'd)

	Special Access	Switched Access	(D)
C. Testing And Maintenance with Other Telephone Companies, or Other Labor (Cont'd)			
2. Central Office Maintenance			
a. Basic Time, Normally Scheduled Working Hours, Per Technician			
Each Half Hour or Fraction Thereof*	$21.19	$34.66	(N)
b. Overtime, Outside of Normally Scheduled Working Hours on a Scheduled Work Day, Per Technician			
Each Half Hour or Fraction Thereof*	$31.79	$51.99	(N)
c. Premium Time, Outside of Scheduled Work Day, Per Technician			
Each Half Hour or Fraction Thereof*	$42.39	$69.32	(N)

14.5.3 Miscellaneous Services

A. Additional Cooperative Acceptance Testing – Switched Access

1. Testing Periods Basic Time, Overtime* and Premium Time*
See rates for Additional Labor as set forth in 14.5.2(C). (T)

* A call-out of a CTC employee at a time not consecutive with the employee's scheduled working period is subject to a minimum charge of four hours.

RECEIVED
APR 17 2014
STATE OF ALASKA
REGULATORY COMMISSION OF ALASKA

CORDOVA TELEPHONE COOPERATIVE, INC. SPECIFIC ACCESS SERVICES

14. Rates and Charges (Cont'd)

14.5 Additional Engineering, Additional Labor And Miscellaneous Service (Cont'd)
Reference Tariff Section 9

14.5.3 Miscellaneous Services - (Cont'd)

B. Additional Automatic Testing – Switched Access to First Point of Switching

	Per Transmission Path	(T)
1. Gain-Slope Tests	$2.89	(N)
2. C-Notched Noise Tests	$2.89	
3. 1004 Hz Loss**	$2.89	
4. C-Message Noise**	$2.89	
5. Balance (ret. loss)**	$2.89	(N)

C. Additional Manual Testing – Switched Access to First Point of Switching

Additional Tests – Per Technician – Each Half Hour or Fraction Thereof
1. Gain-Slope Tests
2. C-Notched Noise Tests
3. Any Other Agreed to Tests

See rates for Additional Labor as set for in 14.5.2(C).

D. Additional Cooperative Acceptance Testing – Special Access

1. Testing Periods – Each Half Hour or Fraction Thereof
   Basic Time, Overtime* and Premium Time*

See rates for Additional Labor as set forth in 14.5.2(C).

* A call-out of a CTC employee at a time not consecutive with the employee's scheduled working period is subject to a minimum charge of four hours.

** 1004 Hz Loss, C-Message Noise and Balance are non-chargeable routine tests; however, they may be requested on an as needed or more than routine schedule basis, in which case the charges herein apply.

RECEIVED
JUL 0 6 2010
STATE OF ALASKA
REGULATORY COMMISSION OF ALASKA

CORDOVA TELEPHONE COOPERATIVE, INC. SPECIFIC ACCESS SERVICES

14. Rates and Charges (Cont'd)

14.5 Additional Engineering, Additional Labor And Miscellaneous Service (Cont'd)
Reference Tariff Section 9

14.5.3 Miscellaneous Services - Cont'd

E. Additional Manual Testing – Special Access

1. Testing Periods – Each Half Hour Or Fraction Thereof
   Basic Time, Overtime* and Premium Time*

   See rates for Additional Labor as set forth in 14.5.2(C).

F. Maintenance of Service

1. Maintenance of Service Periods – Each Half Hour or Fraction Thereof
   Basic Time, Overtime* and Premium Time*

   See rates for Additional Labor as set forth in 14.5.2(C).

* A call-out of a Telephone Company employee at a time not consecutive with the employee's scheduled working period is subject to a minimum charge of four hours.

RECEIVED

NOV 0 3 2008

STATE OF ALASKA
REGULATORY COMMISSION OF ALASKA

COPPER VALLEY TELEPHONE COOPERATIVE, INC.

COMPANY SPECIFIC ACCESS SERVICES

RATES AND CHARGES

Copper Valley Telephone Cooperative, Inc.
P.O. Box 337
Valdez, AK 99866

Pursuant to:
U-08-146(1)

Effective: December 20, 2008

Issued: November 3, 2008
Issued By: Copper Valley Telephone Cooperative, Inc.
By: Dave Dengel Title: CEO/General Manager

RECEIVED
JUN 21 2021
STATE OF ALASKA
REGULATORY COMMISSION OF ALASKA

COPPER VALLEY TELEPHONE COOPERATIVE COMPANY SPECIFIC ACCESS SERVICES

Index to Rates and Charges

14.1	Carrier Common Line Access Service		CVTC-7
	14.1.1	Carrier Common Line Access Service	CVTC-11
	14.1.2	Recurring Charge 14.1.2.a Carrier Common Line 14.1.2.b Network Access Fee	CVTC-11
14.2	Switched Access Service		CVTC-12
	14.2.1	Non-Recurring Charges A. Access Order B. Service Date Change Charge C. Design Change Charge D. Miscellaneous Service Order Charge E. Transport – Installation F. Trunk Activation G. Interim NXX Translation H. Telecommunications Service Priority Charge	CVTC-12
	14.2.2	Recurring Charges A. Entrance Facility B. Direct Trunked Transport C. Local Switching D. Information Surcharge E. Toll Free Data Base Access Service Queries F. Multiplexing G. Tandem Switched Transport	CVTC-13
	14.2.3	Equal Access Recovery Charge	CVTC-14
	14.2.4	Presubscription Change Charge	CVTC-14
	14.2.5	Meet Point Billing	CVTC-14

T

Issued: _____
Issued By: Copper Valley Telephone Cooperative, Inc.
By: Bruce Holdridge Title: CEO

RECEIVED

NOV 0 3 2008

STATE OF ALASKA
REGULATORY COMMISSION OF ALASKA

COPPER VALLEY TELEPHONE COOPERATIVE COMPANY SPECIFIC ACCESS SERVICES

Index to Rates and Charges - (Cont'd)

14.3	Special Access Service	CVTC-15
	14.3.1a Surcharge for Special Access Service	CVTC-15
	14.3.1b Telecommunications Service Priority Charge	CVTC-15
	14.3.1c Special Access Ordering	CVTC-15
	A. Access Order Charge	
	B. Service Date Change Charge	
	C. Design Change Charge	
	E. Miscellaneous Service Order Charge	
14.3.2	Voice Grade Service	CVTC-16
	A. Channel Termination	CVTC-16
	B. Channel Mileage	CVTC-16
	C. Optional Features and Functions	CVTC-16
	1. Bridging	CVTC-16
	2. Conditioning per Termination	CVTC-18
	3. Improved Return Loss for Effective Two-Wire to Four-Wire Transmission	CVTC-19
	4. Customer-Specified Receive Level	CVTC-19
	5. Multiplexing, per Arrangement Voice Grade to Telegraph Grade	CVTC-19
	6. Signaling Capability	CVTC-19
	7. Selective Signaling Arrangement	CVTC-20
	8. Transfer Arrangement	CVTC-20
	9. Public Packet Switching Network (PPSN)	CVTC-20

Pursuant to:
U-08-146(1)

Effective: December 20, 2008

Issued: November 3, 2008
Issued By: Copper Valley Telephone Cooperative, Inc.
By: Dave Dengel Title: CEO/General Manager

RECEIVED

NOV 0 3 2008

STATE OF ALASKA
REGULATORY COMMISSION OF ALASKA

COPPER VALLEY TELEPHONE COOPERATIVE COMPANY SPECIFIC ACCESS SERVICES

Index to Rates and Charges - (Cont'd)

14.3 Special Access Service

14.3.3 Digital Data Service CVTC-21

A. Channel Termination, per Termination CVTC-21

B. Channel Mileage CVTC-21
1. Channel Mileage Facility, per Mile
2 Channel Mileage Termination, per Termination

C. Optional Features and Functions CVTC-22
1. Bridging, Per Port
2. Loop Transfer Arrangement
3. Public Packet Switching Network Interface Arrangement

D. Channel Service Unit per Termination CVTC-23

Pursuant to:
U-08-146(1)

Effective: December 20, 2008

Issued: November 3, 2008
Issued By: Copper Valley Telephone Cooperative, Inc.
By: Dave Dengel Title: CEO/General Manager

RECEIVED

NOV 0 3 2008

STATE OF ALASKA
REGULATORY COMMISSION OF ALASKA

COPPER VALLEY TELEPHONE COOPERATIVE COMPANY SPECIFIC ACCESS SERVICES

Index to Rates and Charges - (Cont'd)

14.3	Special Access Service		
	14.3.4	High Capacity Service	CVTC-23
		A. Channel Termination per Termination	CVTC-23
		B. Channel Mileage	CVTC-23
		C. Optional Features and Functions 1. Multiplexing 2. Automatic Loop Transfer 3. Transfer Arrangement 4. High Capacity Synchronization	CVTC-24
		D. Network Channel Terminating Equipment (NCTE) 1. 1.544 Mbps per Termination 2. Automatic Loop Transer	CVTC-26
14.4	Other Services		CVTC-29
	14.4.1	Public Packet Data Network	CVTC-29
		A. Frame Relay Access Service 1. Connections 2. Access Customer Port 3 Permanent Virtual Connections	CVTC-29

Pursuant to:
U-08-146(1)

Effective: December 20, 2008

Issued: November 3, 2008
Issued By: Copper Valley Telephone Cooperative, Inc.
By: Dave Dengel Title: CEO/General Manager

RECEIVED

MAY 17 2013

STATE OF ALASKA
REGULATORY COMMISSION OF ALASKA

COPPER VALLEY TELEPHONE COOPERATIVE COMPANY SPECIFIC ACCESS SERVICES

Index to Rates and Charges - (Cont'd)

14.5	Additional Engineering, Additional Labor And Miscellaneous Service – Non Switched Services		CVTC-30	(T)
	14.5.1	Additional Engineering	CVTC-30	
	14.5.2	Additional Labor	CVTC-30	
		A. Installation and Repair	CVTC-30	
		B. Stand-By	CVTC-31	
		C. Testing and Maintenance with Other Telephone Companies or Other Labor	CVTC-31	
	14.5.3	Miscellaneous Services		
		A. Additional Cooperative Acceptance Testing – Special Access	CVTC-33	(T)
		B. Additional Manual Testing - Special Access	CVTC-34	
		C. Maintenance of Service	CVTC-34	(T)
14.6	Additional Engineering, Labor and Miscellaneous Services – Switched Access			(N)
	14.6.1	Additional Engineering		
	14.6.2	Additional Labor		
		A. Installation and Repair	CVTC-35	
		B. Stand-By	CVTC-35	
		C. Testing and Maintenance, Installation and Repair	CVTC-35	
		D. Central Office Maintenance Technician	CVTC-35	
	14.6.3	Miscellaneous Services		
		A. Additional Cooperative Acceptance Testing – Switched Access	CVTC-36	
		B. Additional Automatic Testing – Switched Access to First Point of Switching	CVTC-36	
		C. Additional Manual Testing – Switched Access to First Point of Switching	CVTC-36	(N)

RECEIVED

DEC 19 2018

STATE OF ALASKA
REGULATORY COMMISSION OF ALASKA

COPPER VALLEY TELEPHONE COOPERATIVE COMPANY SPECIFIC ACCESS SERVICES

14. Rates and Charges

14.1 Carrier Common Line Access Service (T)

A. General Description

Carrier Common Line Access provides for the use of CVTC's common lines by interexchange carriers (IXC) for access to CVTC's end users to furnish intrastate service.

Carrier Common Line Access is provided where CVTC's end users subscribe to local exchange telephone service.

RECEIVED

DEC 19 2018

STATE OF ALASKA
REGULATORY COMMISSION OF ALASKA

14. Rates and Charges

14.1 Carrier Common Line Access Service (Cont'd) (T)

B. Limitations

1. A telephone number is not provided with Carrier Common Line Access.

2. Detail billing is not provided for Carrier Common Line Access.

3. Directory listings are not included in the rates and charges for Carrier Common Line Access.

4. Intercept arrangements are not included in the rates and charges for Carrier Common Line Access.

C. Undertaking of CVTC

CVTC will provide the use of CVTC's common lines by an IXC for access to end users. The procedure for recovering the Carrier Common Line revenue requirement are set forth in these rules and regulations.

D. Obligations of the Customer

1. Any switched access service associated with Carrier Common Line Access shall be ordered under other sections of this tariff.

2. The IXC facilities at the premises of the ordering IXC shall provide the necessary on-hook and off-hook supervision.

RECEIVED

DEC 1 9 2018

STATE OF ALASKA
REGULATORY COMMISSION OF ALASKA

COPPER VALLEY TELEPHONE COOPERATIVE COMPANY SPECIFIC ACCESS SERVICES

14. Rates and Charges

14.1 Carrier Common Line Access Service (Cont'd)

(T)

E. Rate Regulation

1. The Carrier Common Line Access Charge will be billed as Essential Network Support to the Alaska Universal Service Administrative Company (AUSAC) under this tariff in accordance with the regulations set forth below. **(N)** **(N)**

2. Annual Essential Network Support (ENS) is an amount equal to (i) the amount of carrier common line support received for the year ended December 31, 2016, plus (ii) the amount of carrier of last resort support received for the year ended December 31, 2016. The ENS amount is frozen at that level. The monthly rate will be determined by dividing the annual amount by twelve. **(D)(N)**

   a. The Company will continue to use the frozen Essential Network Support amount, to be recoverd from AUSAC pursuant to this tariff, in calculating the monthly ENS payable under this tariff until it is superseded by a subsequent order of the RCA. **(D)(N)**

RECEIVED

JUN 14 2011

STATE OF ALASKA
REGULATORY COMMISSION OF ALASKA

COPPER VALLEY TELEPHONE COOPERATIVE COMPANY SPECIFIC ACCESS SERVICES

14. Rates and Charges

14.1 Common Line Access Service (Cont'd)

E. Rate Regulation

(D)

(D)

(D) Carrier and Area Specific Bulk Billing rules and regulations 2.c-h are removed per R-08-003(9)

RECEIVED

DEC 19 2018

STATE OF ALASKA
REGULATORY COMMISSION OF ALASKA

COPPER VALLEY TELEPHONE COOPERATIVE

COMPANY SPECIFIC ACCESS SERVICES

14. Rates and Charges

14.1 Carrier Common Line Access Service (Cont'd) (T)

14.1.1 Carrier Common Line Access Service

14.1.2.a Carrier Common Line Charge (C)
Reference Tariff Section 14.1

Essential Network Support Monthly Recurring Charge	$194,388	**(D)** (N) (N) (D)

14.1.2.b Network Access Fee (NAF)
Reference Tariff Section 4.1

Monthly Recurring Charge	$5.75

D = Deleted Carrier Common Line Charge, Per Line

RECEIVED
JUN 22 2026
STATE OF ALASKA
REGULATORY COMMISSION OF ALASKA

14. Rates and Charges (Cont'd)

14.2 Switched Access Service

47 CFR § 51.909 required Transitional Intrastate Access Service (TIAS) rates be subject to the same rates and rate structure as functionally equivalent interstate rates, effective July 1, 2013.

14.2.1 Nonrecurring Charges	Rate	AECA Tariff Reference	
A. Access Order	$140.00	5.2	I
B. Service Date Change Charge	$98.00	5.7	I
C. Design Change Charge	$137.00	5.7	I
D. Miscellaneous Service Order Charge, per occurrence	$200.00	5.7	I
E. Transport – Installation per Entrance Facility		6.8	
1. Voice Grade Four Wire	$406.46		R
2. DS1	$298.08		R
F. Trunk Activation per Order	$414.58	6.8	R
G. Interim NXX Translation per Order	$198.72	6.8	R
H. Telecommunications Service Priority Charge per Circuit	$54.63	9.3	

RECEIVED
JUN 22 2026
STATE OF ALASKA
REGULATORY COMMISSION OF ALASKA

COPPER VALLEY TELEPHONE COOPERATIVE, INC. SPECIFIC ACCESS SERVICES

14. Rates and Charges (Cont'd)

14.2 Switched Access Service (Cont'd)

14.2.2 Recurring Charges

	Rate	AECA Tariff Reference	
A. Entrance Facility, per termination			
1. Voice Grade Four Wire	$110.19	6.8	R
2. DS1	$335.69	6.8	R
3. Collocation			

The Entrance Facility charge specified in Section 6.2 of this tariff will not apply when: 1) the customer designated premises and the serving wire center are physically (including caged, cageless, shared and adjacent arrangements) or virtually collocated as those terms are used in 47 CFR 51.323, and (2) the customer obtains collocation for the purpose of interconnection with the Telephone Company's network for the transmission and routing of telephone exchange service, exchange access or both, and for the purpose of providing local exchange or exchange access services to its customers.

B. Direct Trunked Transport			
1. Direct Trunked Transport Facility, per mile			
a. Voice Grade Four-Wire	$4.89	6.2	R
b. DS1	$23.01	6.2	R
2. Direct Trunked Transport Termination, per termination			
a. Voice Grade Four-Wire	$49.30	6.2	R
b. DS1	$119.31	6.2	R
C. Local Switching Per Minute of Use			
Originating Non-Toll Free Rate	$0.004074	6.8	
Originating Toll Free Rate	$0.000000		
Terminating	$0.000000	6.8	

RECEIVED
JUN 22 2026
STATE OF ALASKA
REGULATORY COMMISSION OF ALASKA

COPPER VALLEY TELEPHONE COOPERATIVE, INC. SPECIFIC ACCESS SERVICES

14. Rates and Charges (Cont'd)

14.2 Switched Access Service (Cont'd)

14.2.2 Recurring Charges

	Rate	AECA Tariff Reference	
D. Information Surcharge per 100 minutes, Premium			
Originating Non-Toll Free Rate	$0.066976	6.8	
Orginating Toll Free Rate	$0.00		
Terminating	$0.00	6.8	
E. Toll Free Data Base Access Service Query (Equal Access)			
1. Basic per Query	$0.0002	6.8	
2. Basic with Vertical Feature per Query	$0.0002	6.8	
F. Multiplexing, per arrangement, DS3 to DS1	$699.11	6.2	R
G. Tandem Switched Transport Per Minutes of Use			
1. Facility, Per Access Minute Per Mile	N/A	6.2	
2. Termination, Per Access Minute Per Termination	N/A	6.2	
3. Tandem Switching, Per Access Minute Per Tandem	N/A	6.2	

RECEIVED

APR 9 2014

STATE OF ALASKA
REGULATORY COMMISSION OF ALASKA

COPPER VALLEY TELEPHONE COOPERATIVE COMPANY SPECIFIC ACCESS SERVICES

14. Rates and Charges (Cont'd)

14.2 Switched Access Service (Cont'd)

14.2.3 Equal Access Recovery Charge
Reference Tariff Section 6.8

Per Presubscribed Equal Access Line	n/a	
14.2.4 Presubscription Change Charge, per line or trunk, submitted manually	$5.50	(N)

14.2.5 Meet Point Billing
When a Switched Access Service is provided by more than one telephone company, ordering and billing will be provided under the terms described in Tariff FCC No. 5 sections 2.4.7 and 5.3. (T)

RECEIVED

NOV 0 3 2008

STATE OF ALASKA
REGULATORY COMMISSION OF ALASKA

COPPER VALLEY TELEPHONE COOPERATIVE COMPANY SPECIFIC ACCESS SERVICES

14. Rates and Charges (Cont'd)

14.3 Special Access Service

14.3.1a Surcharge For Special Access Service
Reference Tariff Section 7.3

Per Voice Grade Equivalent	$25.00

14.3.1b Telecommunications Service Priority Charge
Reference Tariff Section 9.3

Per Circuit – Monthly Recurring Charge	$1.00
Per Circuit – Non-Recurring Charge	$55.00

14.3.1c Special Access Ordering
Reference Tariff Section 5.2 and 5.8

A. Access Order Charge per Order	$97.00
B. Service Date Change Charge	$44.00

A Service Date Change Charge will apply, on a per order per occurrence basis, for each service date changed. The Access Order Charge as specified in 14.3.1c(A) preceding does not apply.

C. Design Change Charge	$44.00

The Design Change Charge will apply on a per order per occurrence basis, for each order requiring design change.

D. Miscellaneous Service Order Charge per Occurrence	$44.00

Pursuant to:
U-08-146(1)

Effective: December 20, 2008

Issued: November 3, 2008
Issued By: Copper Valley Telephone Cooperative, Inc.
By: Dave Dengel Title: CEO/General Manager

RECEIVED

MAR 2 2010

STATE OF ALASKA
REGULATORY COMMISSION OF ALASKA

COPPER VALLEY TELEPHONE COOPERATIVE COMPANY SPECIFIC ACCESS SERVICES

14. Rates and Charges (Cont'd)

14.3 Special Access Service (Cont'd)

14.3.2 Voice Grade Service
Reference Tariff Section 7.4

A. Channel Termination Per Termination

Two-Wire, Monthly Recurring Charge	$ 77.55	I
Four-Wire, Monthly Recurring Charge	123.70	I
Non-Recurring Charge	325.00	

B. Channel Mileage

1. Channel Mileage Facility

Two-Wire, Monthly Recurring Charge per Mile	n/a
Four-Wire, Monthly Recurring Charge per Mile	n/a

2. Channel Mileage Termination Per Termination

Two-Wire, Monthly Recurring Charge	n/a
Four-Wire Monthly Recurring Charge	n/a

C. Optional Features And Functions

1. Bridging

a. Voice Bridging, Per Port

Two-Wire, Monthly Recurring Charge	$7.85
Four-Wire, Monthly Recurring Charge	7.85
Non-Recurring Charge	n/a

b. Data Bridging, Per Port

Two-Wire, Monthly Recurring Charge	$7.85
Four-Wire, Monthly Recurring Charge	7.85
Non-Recurring Charge	n/a

c. Telephoto Bridging, Per Port

Two-Wire, Monthly Recurring Charge	$7.85
Four-Wire, Monthly Recurring Charge	$7.85
Non-Recurring Charge	n/a

RECEIVED

NOV 0 3 2008

STATE OF ALASKA
REGULATORY COMMISSION OF ALASKA

COPPER VALLEY TELEPHONE COOPERATIVE COMPANY SPECIFIC ACCESS SERVICES

14. Rates and Charges (Cont'd)

14.3 Special Access Service (Cont'd)

14.3.2 Voice Grade Service (Cont'd)
Reference Tariff Section 7.4

C. Optional Features And Functions (Cont'd)

1. Bridging (Cont'd)

d. Dataphone Select-A-Station

Sequential Arrangement, Ports per Channel Connected	
Two-Wire, Monthly Recurring Charge	$ 26.81
Four-Wire, Monthly Recurring Charge	142.21
Non-Recurring Charge	n/a
Addressable Arrangement, Ports Per Channel Connected	
Two-Wire, Monthly Recurring Charge	$ 28.69
Four-Wire, Monthly Recurring Charge	124.21
Non-Recurring Charge	n/a

e. Telemetry And Alarm Bridging

Active Bridging Channel Connections, Per Channel Connected	
Split Band, Monthly Recurring Charge	$12.52
Summation, Monthly Recurring Charge	4.88
Non-Recurring Charges	n/a
Passive Bridging Channel Connections, Per Channel Connected	
Monthly Recurring Charge	$0.34
Non-Recurring Charges	n/a

Pursuant to:
U-08-146(1)

Effective: December 20, 2008

Issued: November 3, 2008
Issued By: Copper Valley Telephone Cooperative, Inc.
By: Dave Dengel Title: CEO/General Manager

RECEIVED

MAR 2 2010

STATE OF ALASKA
REGULATORY COMMISSION OF ALASKA

COPPER VALLEY TELEPHONE COOPERATIVE COMPANY SPECIFIC ACCESS SERVICES

14. Rates and Charges (Cont'd)

14.3 Special Access Service (Cont'd)

14.3.2 Voice Grade Service (Cont'd)
Reference Tariff Section 7.4

C. Optional Features And Functions (Cont'd)

2. Conditioning Per Termination

a. C Type		
Monthly Recurring Charge	$8.70	
Non-Recurring Charge	n/a	
b. Improved Attenuation Distortion		
Monthly Recurring Charge	n/a	
Non-Recurring Charge	n/a	
c. Improved Envelope Delay Distortion		
Monthly Recurring Charge	n/a	
Non-Recurring Charge	n/a	
d. Data Capability		
Monthly Recurring Charge	$9.80	I
Non-Recurring Charge	n/a	
e. Telephoto Capability		
Monthly Recurring Charge	$10.91	
Non-Recurring Charge	n/a	
f. Telephoto Capability (VG11 & VGC)		
Monthly Recurring Charge	n/a	
Non-Recurring Charge	n/a	
g. Sealing Current		
Monthly Recurring Charge	n/a	
Non-Recurring Charge	n/a	

RECEIVED

NOV 0 3 2008

STATE OF ALASKA
REGULATORY COMMISSION OF ALASKA

COPPER VALLEY TELEPHONE COOPERATIVE COMPANY SPECIFIC ACCESS SERVICES

14. Rates and Charges (Cont'd)

14.3 Special Access Service (Cont'd)

14.3.2 Voice Grade Service (Cont'd)
Reference Tariff Section 7.4

C. Optional Features And Functions (Cont'd)

3. Improved Return Loss For Effective Two-Wire To Four-Wire Transmission Per Termination

Two-Wire, Monthly Recurring Charge	$15.46
Four-Wire, Monthly Recurring Charge	15.46
Non-Recurring Charge	n/a

4. Customer-Specified Receive Level, Per Two-Wire Termination

Monthly Recurring Charge	$10.63
Non-Recurring Charge	n/a

5. Multiplexing, Per Arrangement Voice To Telegraph Grade

Monthly Recurring Charge	$273.29
Non-Recurring Charge	n/a

6. Signaling Capability

Monthly Recurring Charge	
- Per Termination	$15.65
- VG1 – Loop Start Either End	n/a
- VG1 – Ground Start Either End	n/a
- VG2 – Loop Start Closed End Only	n/a
- VG2 – Ground Start to Centrex Station Line Only	n/a
- VG2 – 20HZ Ringdown	n/a
- VG3, VG7 – Loop Start	n/a
- VG3, VG7 – Ground Start	n/a
- VG3, VG7 – E & M	n/a
- VG8, VG9 – Loop Start at Closed End	n/a
- VG8, VG9 – E & M, SF, DX at Open End	n/a
- VG8, VG9 – E & M at Closed End	n/a
Non-Recurring Charge	n/a

RECEIVED

NOV 0 3 2008

STATE OF ALASKA
REGULATORY COMMISSION OF ALASKA

COPPER VALLEY TELEPHONE COOPERATIVE COMPANY SPECIFIC ACCESS SERVICES

14. Rates and Charges (Cont'd)

14.3 Special Access Service (Cont'd)

14.3.2 Voice Grade Service (Cont'd)
Reference Tariff Section 7.4

C. Optional Features And Functions (Cont'd)

7. Selective Signaling Arrangement, Per Arrangement

Monthly Recurring Charge	$7.85
Non-Recurring Charge	n/a

8. Transfer Arrangement (Key Activated* or Dial Up)**

Per Four Port Arrangement, Including Control Channel Termination (See Note)

Monthly Recurring Charge	$3.78
Non-Recurring Charge	n/a

Per Five Port Arrangement, Including Control Channel Termination (See Note)

Monthly Recurring Charge	$8.64
Non-Recurring Charge	n/a

9. Public Packet Switching Network (PPSN) Interface Arrangement, Per Arrangement

Monthly Recurring Charge	ICB
Non-Recurring Charge	n/a

* The key activated control channel is rated as a Voice Grade Channel Termination and Channel Mileage, if applicable.

** The Dial-Up option requires the customer to purchase the Controller Arrangement.

Note: An additional Channel Termination Charge will apply whenever a spare channel is configured as a leg to the customer designated premises. Additional channel mileage charges will also apply when the transfer arrangement is not located in the customer designated premises serving wire center.

Pursuant to:
U-08-146(1)

Effective: December 20, 2008

Issued: November 3, 2008
Issued By: Copper Valley Telephone Cooperative, Inc.
By: Dave Dengel Title: CEO/General Manager

RECEIVED

MAR 2 2010

STATE OF ALASKA
REGULATORY COMMISSION OF ALASKA

COPPER VALLEY TELEPHONE COOPERATIVE COMPANY SPECIFIC ACCESS SERVICES

14. Rates and Charges (Cont'd)

14.3 Special Access Service (Cont'd)

14.3.3 Digital Data Service
Reference Tariff Section 7.7

A. Channel Termination Per Termination

Monthly Recurring Charge		
- 2.4 Kbps	$ 96.54	
- 4.8 Kbps	96.54	
- 9.6 Kbps	96.54	
- 19.2 Kbps	96.54	
- 56.0 Kbps	143.40	I
- 64.0 Kbps	96.54	
Non-Recurring Charge	353.00	

A. Channel Mileage

1. Channel Mileage Facility Per Mile

Monthly Recurring Charge	
- 2.4 Kbps	n/a
- 4.8 Kbps	n/a
- 9.6 Kbps	n/a
- 19.2 Kbps	n/a
- 56.0 Kbps	n/a
- 64.0 Kbps	n/a
Non-Recurring Charge	n/a

2. Channel Mileage Termination per Termination

Monthly Recurring Charge	
- 2.4 Kbps	n/a
- 4.8 Kbps	n/a
- 9.6 Kbps	n/a
- 19.2 Kbps	n/a
- 56.0 Kbps	n/a
- 64.0 Kbps	n/a
Non-Recurring Charge	n/a

RECEIVED

NOV 0 3 2008

STATE OF ALASKA
REGULATORY COMMISSION OF ALASKA

COPPER VALLEY TELEPHONE COOPERATIVE COMPANY SPECIFIC ACCESS SERVICES

14. Rates and Charges (Cont'd)

14.3 Special Access Service (Cont'd)

14.3.3 Digital Data Service (Cont'd)
Reference Tariff Section 7.7

C. Optional Features And Functions

1. Bridging, Per Port

Monthly Recurring Charge	$9.49
Non-Recurring Charge	n/a

2. Loop Transfer Arrangement (Key Activated* or Dial Up) Per Four Port Arrangement (See Note)**

Monthly Recurring Charge	$7.51
Non-Recurring Charge	n/a

3. Public Packet Switching Network

a. Interface Arrangement – 9.6 Kbps

Monthly Recurring Charge	ICB
Non-Recurring Charge	n/a

b. Interface Arrangement – 56.0 Kbps

Monthly Recurring Charge	ICB
Non-Recurring Charge	n/a

* The key activiated control channel is rated as a Voice Grade Channel Termination and Channel Mileage, if applicable.

** The Dial Up option requires the customer to purchase the Controller Arrangement.

Note: An additional Channel Termination Charge will apply whenever a spare channel is configured as a leg to the customer designated premises. Additional channel mileage charges will also apply when the transfer arrangement is not located in the customer designated premises serving wire center.

Pursuant to:
U-08-146(1)

Effective: December 20, 2008

Issued: November 3, 2008
Issued By: Copper Valley Telephone Cooperative, Inc.
By: Dave Dengel Title: CEO/General Manager

RECEIVED

MAR 2 2010

STATE OF ALASKA
REGULATORY COMMISSION OF ALASKA

COPPER VALLEY TELEPHONE COOPERATIVE COMPANY SPECIFIC ACCESS SERVICES

14. Rates and Charges (Cont'd)

14.3 Special Access Service (Cont'd)

14.3.3 Digital Data Service (Cont'd)
Reference Tariff Section 7.7

D. Channel Service Unit Per Termination

Monthly Recurring Charge	
- 2.4 Kbps	$37.52
- 4.8 Kbps	37.52
- 9.6 Kbps	37.52
- 56.0 Kbps	37.52
Non-Recurring Charge	n/a

14.3.4 High Capacity Service
Reference Tariff Section 7.8

A. Channel Termination Per Termination

Monthly Recurring Charge		
- 1.544 Mbps	$347.75	I
- 3.152 Mbps	ICB	
- 6.312 Mbps	ICB	
- 44.736 Mbps	ICB	
- 274.176 Mbps	ICB	
Non-Recurring Charge – 1.544 Mbps	378.00	
Non-Recurring Charge – All Others	ICB	

B. Channel Mileage

1. Facility Per Mile

Monthly Recurring Charge	
- 64.0 Kpbs	n/a
- 1.544 Mbps	n/a
- 3.152 Mbps	n/a
- 6.312 Mbps	n/a
- 44.736 Mbps	n/a
- 274.176 Mbps	n/a
Non-Recurring Charge	n/a

RECEIVED

NOV 0 3 2008

STATE OF ALASKA
REGULATORY COMMISSION OF ALASKA

COPPER VALLEY TELEPHONE COOPERATIVE COMPANY SPECIFIC ACCESS SERVICES

14. Rates and Charges (Cont'd)

14.3 Special Access Service (Cont'd)

14.3.4 High Capacity Service (Cont'd)
Reference Tariff Section 7.8

B. Channel Mileage (Cont'd)

2. Per Termination

Monthly Recurring Charge	
- 64.0 Kbps	n/a
- 1.544 Mbps	n/a
- 3.152 Mbps	n/a
- 6.312 Mbps	n/a
- 44.736 Mbps	n/a
- 274.176 Mbps	n/a
Non-Recurring Charge	n/a

C. Optional Features and Functions

1. Multiplexing Per Arrangement

Monthly Recurring Charge	
- DS4 to DS1	ICB
- DS3 to DS1	$573.08
- DS2 to DS1	ICB
- DS1C to DS1	ICB
- DS1 to Voice*	221.26
- DS1 to DS0	221.26
- DS0 to Subrates – Up to 20 2.4 Kbps Services	471.22
- DS0 to Subrates – Up to 10 4.8 Kbps Services	320.18
- DS0 to Subrates – Up to 5 9.6 Kbps Services	283.93
-Non-Recurring Charge	n/a

* A channel of this DS1 to the Hub can be used for Digital Data Service.

Pursuant to:
U-08-146(1)

Effective: December 20, 2008

Issued: November 3, 2008
Issued By: Copper Valley Telephone Cooperative, Inc.
By: Dave Dengel Title: CEO/General Manager

RECEIVED

NOV 0 3 2008

STATE OF ALASKA
REGULATORY COMMISSION OF ALASKA

COPPER VALLEY TELEPHONE COOPERATIVE COMPANY SPECIFIC ACCESS SERVICES

14. Rates and Charges (Cont'd)

14.3 Special Access Service (Cont'd)

14.3.4 High Capacity Service (Cont'd)
Reference Tariff Section 7.8

C. Optional Features And Functions (Cont'd)

2. Automatic Loop Transfer, Per Arrangement	
Monthly Recurring Charge	$190.90
Non-Recurring Charge	n/a
3. Transfer Arrangement (Key Activated* or Dial Up) Per Four Port Arrangement, Including Control Channel Termination (See Note)**	
Monthly Recurring Charge	$208.07
Non-Recurring Charge	n/a
4. High Capacity Synchronization	
Monthly Recurring Charge	n/a
Non-Recurring Charge	n/a

* The key activated control channel is rated as a Voice Grade Channel Termination and Channel Mileage, if applicable.

** The Dial Up option requires the customer to purchase the Controller Arrangement.

Note: An additional Channel Termination Charge will apply whenever a spare channel is configured as a leg to the customer designated premises. Additional channel mileage charges will also apply when the transfer arrangement is not located in the customer designated premises serving wire center.

Pursuant to:
U-08-146(1)

Effective: December 20, 2008

Issued: November 3, 2008
Issued By: Copper Valley Telephone Cooperative, Inc.
By: Dave Dengel Title: CEO/General Manager

RECEIVED

JUN 1 1 2009

STATE OF ALASKA
REGULATORY COMMISSION OF ALASKA

COPPER VALLEY TELEPHONE COOPERATIVE COMPANY SPECIFIC ACCESS SERVICES

14. Rates and Charges (Cont'd)

14.3 Special Access Service (Cont'd)

14.3.4 High Capacity Service (Cont'd)
Reference Tariff Section 7.8

D. Network Channel Terminating Equipment (NCTE)

1. 1.544 Mbps Per Termination (Note)

Monthly Recurring Charge	$108.26
Non-Recurring Charge	n/a

1. Automatic Loop Transfer, Per Termination (Note)

Monthly Recurring Charge	$434.96
Non-Recurring Charge	n/a

E. Synchronous Optical Channel Service N

1. Channel Termination, Per Termination

Monthly Recurring Charge	
- OC3/OC3c 155.52 Mbps	$1,709.26
- OC12 622.08 Mbps	3,336.19
Non-Recurring Charge	360.00

2. Channel Mileage Facility, Per Mile

Monthly Recurring Charge	
- OC3/OC3c 155.52 Mbps	$175.80
- OC12 622.08 Mbps	351.60

3. Channel Mileage Termination, Per Termination

Monthly Recurring Charge	
- OC3/OC3c 155.52 Mbps	$ 608.39
- OC12 622.08 Mbps	2,269.09

N

Note 1: NCTE will only be provided under tariff if they existed in the Telephone Company's inventory as of November 18, 1983.

RECEIVED

JUL 29 2009

STATE OF ALASKA
REGULATORY COMMISSION OF ALASKA

COPPER VALLEY TELEPHONE COOPERATIVE COMPANY SPECIFIC ACCESS SERVICES

14. Rates and Charges (Cont'd)

14.3 Special Access Service (Cont'd)

14.3.4 High Capacity Service (Cont'd)
Reference Tariff Section 7.8

E. Synchronous Optical Channel Service

1. Channel Termination, Per Termination

Monthly Recurring Charge	
- OC3/OC3c 155.52 Mbps	$1,709.26
- OC12 622.08 Mbps	3,336.19
Non-Recurring Charge	360.00

2. Channel Mileage Facility, Per Mile

Monthly Recurring Charge	
- OC3/OC3c 155.52 Mbps	$175.80
- OC12 622.08 Mbps	351.60

3. Channel Mileage Termination, Per Termination

Monthly Recurring Charge	
- OC3/OC3c 155.52 Mbps	$ 608.39
- OC12 622.08 Mbps	2,269.09

Note 1: NCTE will only be provided under tariff if they existed in the Telephone Company's inventory as of November 18, 1983.

RECEIVED

JUN 1 1 2009

STATE OF ALASKA
REGULATORY COMMISSION OF ALASKA

COPPER VALLEY TELEPHONE COOPERATIVE COMPANY SPECIFIC ACCESS SERVICES

14. Rates and Charges (Cont'd) N

14.3 Special Access Service (Cont'd)

14.3.4 High Capacity Service (Cont'd)
Reference Tariff Section 7.8

E. Synchronous Optical Channel Service (Cont'd)

4. Optional Rate Plan Term Discounts

OC3/OC3c and OC12 Services	
- 36 Months	10%
- 60 Months	20%

5. Optional Features and Functions

a. Customer Node Per Node

Monthly Recurring Charge	
- OC3/OC3c 155.52 Mbps	$ 594.90
- OC12 622.08 Mbps	1,718.62
Non-Recurring Charge	230.00

Customer Premises Port, Per Port

Monthly Recurring Charge	
- OC3/OC3c 155.52 Mbps	$180.26
- STS-1 51.84 Mbps	234.36
- DS3 44.736 Mbps	234.36
Non-Recurring Charge	248.00

Monthly Recurring Charge	
- DS1 1.544 Mbps	60.08
Non-Recurring Charge	63.00

N

RECEIVED

JUN 1 1 2009

STATE OF ALASKA
REGULATORY COMMISSION OF ALASKA

COPPER VALLEY TELEPHONE COOPERATIVE COMPANY SPECIFIC ACCESS SERVICES

14. Rates and Charges (Cont'd) N

14.3 Special Access Service (Cont'd)

14.3.4 High Capacity Service (Cont'd)
Reference Tariff Section 7.8

E. Synchronous Optical Channel Service (Cont'd)

5. Optional Features and Functions (Cont'd)

b. Add/Drop Multiplexing Central Office Port, Per Port

Monthly Recurring Charge	
- OC3/OC3c 155.52 Mbps	$180.26
- DS3 44.736 Mbps	120.18
- DS1 1.544 Mbps	48.07

c. Shared SONET Ring Interoffice Transport Per Channel Mileage Facility

Monthly Recurring Charge	
- OC3/OC3c	n/a
- OC12	n/a

N

RECEIVED

NOV 0 3 2008

STATE OF ALASKA
REGULATORY COMMISSION OF ALASKA

COPPER VALLEY TELEPHONE COOPERATIVE COMPANY SPECIFIC ACCESS SERVICES

14. Rates and Charges (Cont'd)

14.4 Other Services

14.4.1 Public Packet Data Network

A. Frame Relay Access Service
Reference Tariff Section 12

1. Connections – End User Port (Per Port)

Monthly Recurring Charge	
- 56.0 Kbps	n/a
- 64.0 Kbps	n/a
- 1.544 Mbps	n/a
Non-Recurring Charge	n/a

2. Access Customer Port (Per Port)

Monthly Recurring Charge	
- 1.544 Mbps	n/a
Non-Recurring Charge	n/a

3. Permanent Virtual Connections (PVC)

a. Standard – CIR

Monthly Recurring Charge	
- 8 Kbps	n/a
- 16 Kbps	n/a
- 28 Kbps	n/a
- 32 Kbps	n/a
- 56 Kbps	n/a
- 64 Kbps	n/a
- 128 Kbps	n/a
- 192 Kbps	n/a
- 256 Kbps	n/a
- 384 Kbps	n/a
- 512 Kbps	n/a
- 768 Kbps	n/a
Non-Recurring Charge	n/a

Note 1: NCTE will only be provided under tariff if they existed in the Telephone Company's inventory as of November 18, 1983.

Pursuant to:
U-08-146(1)

Effective: December 20, 2008

Issued: November 3, 2008
Issued By: Copper Valley Telephone Cooperative, Inc.
By: Dave Dengel Title: CEO/General Manager

RECEIVED

JUL 2 9 2009

STATE OF ALASKA
REGULATORY COMMISSION OF ALASKA

14. Rates and Charges (Cont'd)

14.4 Other Services

14.4.1 Public Packet Data Network (Cont'd)

B. Ethernet Transport Service
Reference Tariff Section 12

1. ETS Channel Terminations

a. Per termination when customer designated premises located within 300 feet of ETS SWC

Monthly Recurring Charge	
- 10 Mbps	$246.00
- 20 Mbps	270.00
- 50 Mbps	324.00
- 100 Mbps	360.00
Non-Recurring Charge	225.00
Monthly Recurring Charge	
- 500 Mbps	672.00
- 1 Gbps	894.00
Non-Recurring Charge	650.00

b. Per termination when customer designated premises located more than 300 feet from ETS SWC

Monthly Recurring Charge	
- 10 Mbps	$330.00
- 20 Mbps	360.00
- 50 Mbps	438.00
- 100 Mbps	480.00
Non-Recurring Charge	225.00
Monthly Recurring Charge	
- 500 Mbps	900.00
- 1 Gbps	1,200.00
Non-Recurring Charge	650.00

RECEIVED

JUL 2 9 2009

STATE OF ALASKA
REGULATORY COMMISSION OF ALASKA

COPPER VALLEY TELEPHONE COOPERATIVE COMPANY SPECIFIC ACCESS SERVICES

14. Rates and Charges (Cont'd)

14.4 Other Services

14.4.1 Public Packet Data Network (Cont'd)

B. Ethernet Transport Service (Cont'd)
Reference Tariff Section 12

2. Ports

a. Per ETS Basic Port

Monthly Recurring Charge	
- 10 Mbps	$ 270.00
- 20 Mbps	300.00
- 50 Mbps	330.00
- 100 Mbps	360.00
Non-Recurring Charge	550.00
Monthly Recurring Charge	
- 500 Mbps	630.00
- 1 Gbps	960.00
Non-Recurring Charge	1,350.00

b. **Per ETS Interconnection Port**

Monthly Recurring Charge	
- 44.736 Mbps	$2,700.00
Non-Recurring Charge	750.00
Monthly Recurring Charge	
- 155.52 Mbps	3,240.00
Non-Recurring Charge	1,240.00
Monthly Recurring Charge	
- 622.08 Mbps	5,400.00
Non-Recurring Charge	1,550.00

RECEIVED

JUL 29 2009

STATE OF ALASKA
REGULATORY COMMISSION OF ALASKA

14. Rates and Charges (Cont'd)

14.4 Other Services

14.4.1 Public Packet Data Network (Cont'd)

B. Ethernet Transport Service (Cont'd)
Reference Tariff Section 12

3. ETS Ethernet Virtual Connections (EVCs)

a. Per Intraswitch ETS EVC

Monthly Recurring Charge	
- 5 Mbps	$ 0.00
- 10 Mbps	0.00
- 20 Mbps	0.00
- 50 Mbps	0.00
- 100 Mbps	0.00
- 500 Mbps	0.00
- 1 Gbps	0.00
Non-Recurring Charge	75.00

b. **Per Interswitch ETS EVC**

Monthly Recurring Charge	
- 5 Mbps	$ 96.00
- 10 Mbps	180.00
- 20 Mbps	360.00
- 50 Mbps	504.00
- 100 Mbps	804.00
- 500 Mbps	2,760.00
- 1 Gbps	4,800.00
Non-Recurring Charge	75.00

RECEIVED

JUL 29 2009

STATE OF ALASKA
REGULATORY COMMISSION OF ALASKA

14. Rates and Charges (Cont'd)

14.4 Other Services

14.4.1 Public Packet Data Network (Cont'd)

B. Ethernet Transport Service (Cont'd)
Reference Tariff Section 12

4. ETS Extended Ethernet Virtual Connections (E-EVCs)

a. Per ETS E-EVC

Monthly Recurring Charge	
- 5 Mbps	$ 60.00
- 10 Mbps	108.00
- 20 Mbps	216.00
- 50 Mbps	336.00
- 100 Mbps	540.00
- 500 Mbps	1,740.00
- 1 Gbps	3,000.00
Non-Recurring Charge	100.00

RECEIVED

JUL 29 2009

STATE OF ALASKA
REGULATORY COMMISSION OF ALASKA

COPPER VALLEY TELEPHONE COOPERATIVE COMPANY SPECIFIC ACCESS SERVICES

14. Rates and Charges (Cont'd)

14.4 Other Services

14.4.1 Public Packet Data Network (Cont'd)

B. Ethernet Transport Service (Cont'd)
Reference Tariff Section 12

5. ETS Term Discount Plan

Term Commitment	
- 36 Months	10%
- 60 Months	20%

RECEIVED

MAY 1 7 2013

STATE OF ALASKA
REGULATORY COMMISSION OF ALASKA

COPPER VALLEY TELEPHONE COOPERATIVE COMPANY SPECIFIC ACCESS SERVICES

14. Rates and Charges (Cont'd)

14.5 Additional Engineering, Additional Labor And Miscellaneous Service (T)

Reference Tariff Section 9*

Applies to all Services Except Switched Access. (N)

See Section 14.6 for Switched Access Additional Engineering, Labor, and Miscellaneous Services. (N)

14.5.1 Additional Engineering

A. Basic Time, Normally Scheduled Working Hours, Per Engineer

Each Half Hour or Fraction Thereof* $27.19

B. Overtime, Outside of Normally Scheduled Working Hours, Per Engineer

Each Half Hour or Fraction Thereof* $40.79

C. Premium Time, Outside of Scheduled Work Day, Per Engineer

Each Half Hour or Fraction Thereof* $54.38

14.5.2 Additional Labor

A. Installation and Repair

1. Overtime, Outsite of Normally Scheduled Working Hours on a Scheduled Work Day, Per Technician

Each Half Hour or Fraction Thereof* $32.90

2. Premium Time, Outside of Normally Scheduled Work Day, Per Technician

Each Half Hour or Fraction Thereof* $43.86

* A call out of a Telephone Company employee at a time not consecutive with the employee's schedules working period is subject to a minimum charge of four hours.

RECEIVED

NOV 0 3 2008

STATE OF ALASKA
REGULATORY COMMISSION OF ALASKA

COPPER VALLEY TELEPHONE COOPERATIVE COMPANY SPECIFIC ACCESS SERVICES

14. Rates and Charges (Cont'd)

14.5 Additional Engineering, Additional Labor And Miscellaneous Service (Cont'd)
Reference Tariff Section 9

14.5.2 Additional Labor

B. Stand-By

1. Basic Time, Normally Scheduled Working Hours, Per Technician Each Half Hour or Fraction Thereof*	$21.67
2. Overtime, Outside of Normally Scheduled Working Hours on a Scheduled Work Day, Per Technician Each Half Hour or Fraction Thereof*	$32.51
3. Premium Time, Outside of Scheduled Work Day, Per Technician Each Half Hour or Fraction Thereof*	$43.34

C. Testing and Maintenance with Other Telephone Companies, or Other Labor

1. Installation and Repair

a. Basic Time, Normally Scheduled Working Hours, Per Technician Each Half Hour or Fraction Thereof*	$21.93
b. Overtime, Outside of Normally Scheduled Working Hours on a Scheduled Work Day, Per Technician Each Half Hour or Fraction Thereof*	$32.90
c. Premium Time, Outside of Scheduled Work Day, Per Technician Each Half Hour or Fraction Thereof*	$43.86

* A call-out of a Telephone Company employee at a time not consecutive with the employee's scheduled working period is subject to a minimum charge of four hours.

Pursuant to:
U-08-146(1)

Effective: December 20, 2008

Issued: November 3, 2008
Issued By: Copper Valley Telephone Cooperative, Inc.
By: Dave Dengel Title: CEO/General Manager

RECEIVED

MAY 17 2013

STATE OF ALASKA
REGULATORY COMMISSION OF ALASKA

COPPER VALLEY TELEPHONE COOPERATIVE COMPANY SPECIFIC ACCESS SERVICES

14. Rates and Charges (Cont'd)

14.5 Additional Engineering, Additional Labor And Miscellaneous Service (Cont'd)
Reference Tariff Section 9

14.5.2 Additional Labor (Cont'd)

C. Testing And Maintenance with Other Telephone Companies, or Other Labor (Cont'd)

2. Central Office Maintenance

a. Basic Time, Normally Scheduled Working Hours, Per Technician Each Half Hour or Fraction Thereof*	$23.81
b. Overtime, Outside of Normally Scheduled Working Hours on a Scheduled Work Day, Per Technician Each Half Hour or Fraction Thereof*	$35.72
c. Premium Time, Outside of Scheduled Work Day, Per Technician Each Half Hour or Fraction Thereof*	$47.62

(L)

(L)

* A call-out of a Telephone Company employee at a time not consecutive with the employee's scheduled working period is subject to a minimum charge of four hours.

L = Miscellaneous Services relocated to Original Sheet No. CVTC – 36

RECEIVED

JUN 0 6 2013

STATE OF ALASKA
REGULATORY COMMISSION OF ALASKA

COPPER VALLEY TELEPHONE COOPERATIVE COMPANY SPECIFIC ACCESS SERVICES

14. Rates and Charges (Cont'd)

14.5 Additional Engineering, Additional Labor And Miscellaneous Service (Cont'd)
Reference Tariff Section 9

14.5.3 Miscellaneous Services

(L)

(L)

A. Additional Cooperative Acceptance Testing – Special Access (T)

1. Tesing Periods – Each Half Hour or Fraction Thereof
   Basic Time, Overtime* and Premium Time*

   See rates for Additional Labor as set forth in 14.5.2(C).

* A call-out of a Telephone Company employee at a time not consecutive with the employee's scheduled working period is subject to a minimum charge of four hours.

L = Relocated to Original Sheet No. CVTC – 36

RECEIVED

MAY 1 7 2013

STATE OF ALASKA
REGULATORY COMMISSION OF ALASKA

COPPER VALLEY TELEPHONE COOPERATIVE COMPANY SPECIFIC ACCESS SERVICES

14. Rates and Charges (Cont'd)

14.5 Additional Engineering, Additional Labor And Miscellaneous Service (Cont'd)
Reference Tariff Section 9

14.5.3 Miscellaneous Services - Cont'd

B. Additional Manual Testing – Special Access (T)

1. Testing Periods – Each Half Hour Or Fraction Thereof
   Basic Time, Overtime* and Premium Time*

   See rates for Additional Labor as set forth in 14.5.2(C).

C. Maintenance of Service (T)

1. Maintenance of Service Periods – Each Half Hour or Fraction Thereof
   Basic Time, Overtime* and Premium Time*

   See rates for Additional Labor as set forth in 14.5.2(C).

* A call-out of a Telephone Company employee at a time not consecutive with the employee's scheduled working period is subject to a minimum charge of four hours.

RECEIVED

APR 15 2014

STATE OF ALASKA
REGULATORY COMMISSION OF ALASKA

COPPER VALLEY TELEPHONE COOPERATIVE COMPANY SPECIFIC ACCESS SERVICES

14. Rates and Charges (Cont'd)

14.6 Additional Engineering, Labor, and Miscellaneous Services – Switched Access Each Half Hour, or Fraction Thereof. Reference Tariff Section 9. (T)

	Rate	
14.6.1 Additional Engineering Periods, Each Half Hour, or Fraction Thereof.		(T)
A. Basic Time, per engineer	$31.03	(N)
B. Overtime, per engineer	$46.55	
C. Premium Time, per engineer	$62.06	
14.6.2 Additional Labor Periods, Each Half Hour, or Fraction Thereof.		
A. Installation or Repair		
1. Overtime, per technician	$47.57*	
2. Premium Time, per technician	$63.42*	
B. Stand by		
1. Basic Time, per technician	$21.18*	
2. Overtime, per technician	$31.77*	
3. Premium Time, per technician	$42.36*	
C. Testing and Maintenance, Installation and Repair		
1. Basic Time, per technician	$31.71	
2. Overtime, per technician	$47.57*	
3. Premium Time, per technician	$63.42*	
D. Central Office Maintenance Technician		
1. Basic Time, per technician	$34.66	
2. Overtime, per technician	$51.99*	
3. Premium Time, per technician	$69.32*	(N)

* A call-out of a Telephone Company employee at a time not consecutive with the employee's scheduled working period is subject to a minimum charge of four hours.

RECEIVED

APR 15 2014

STATE OF ALASKA
REGULATORY COMMISSION OF ALASKA

COPPER VALLEY TELEPHONE COOPERATIVE COMPANY SPECIFIC ACCESS SERVICES

14. Rates and Charges (Cont'd)

14.6 Additional Engineering, Additional Labor And Miscellaneous Service – Switched Access (Cont'd)
Reference Tariff Section 9

14.6.3 Miscellaneous Services

A. Additional Cooperative Acceptance Testing – Switched Access

1. Testing Periods Basic Time, Overtime and Premium Time*
See rates for Additional Labor as set forth in 14.6.2(C).

B. Additional Automatic Testing – Switched Access to First Point of Switching**
Per Test Per Transmission Path

	Rate	AECA Tariff Reference	
1. Gain-Slope Tests	$2.89	9.3.1	(N)
2. C-Notched Noise Tests	$2.89	9.3.1	
3. 1004 Hz Loss	$2.89	9.3.1	
4. C-Message Noise	$2.89	9.3.1	
5. Balance (ret. loss)	$2.89	9.3.1	(N)

C. Additional Manual Testing – Switched Access to First Point of Switching (D)

Additional Tests – Per Technician – Each Half Hour or Fraction Thereof
1. Gain-Slope Tests
2. C-Notched Noise Tests
3. Any Other Agreed to Tests

See rates for Additional Labor as set for in 14.6.2(C).

* A call-out of a Telephone Company employee at a time not consecutive with the employee's scheduled working period is subject to a minimum charge of four hours.

** 1004 Hz Loss, C-Message Noise and Balance are non-chargeable routine tests; however, they may be requested on an as needed or more than routine schedule basis, in which case the charges herein apply.

RECEIVED

NOV 0 3 2008

STATE OF ALASKA
REGULATORY COMMISSION OF ALASKA

KETCHIKAN PUBLIC UTILITIES – TELEPHONE DIVISION

COMPANY SPECIFIC ACCESS SERVICES

RATES AND CHARGES

City of Ketchikan
Ketchikan Public Utilities – Telephone Division
2930 Tongass Avenue
Ketchikan, AK 99901

Pursuant to:
U-08-147(1)

Effective: December 20, 2008

Issued: November 3, 2008
Issued By: Ketchikan Public Utilities - Telephone Division
By: Van Abbott Title: Manager

RECEIVED
JUN 21 2021
STATE OF ALASKA
REGULATORY COMMISSION OF ALASKA

TELEPHONE EXCHANGE CARRIERS OF ALASKA

KETCHIKAN PUBLIC UTILITIES COMPANY SPECIFIC ACCESS SERVICES

Index to Rates and Charges

14.1	Carrier Common Line Access Service		KPU-7
	14.1.1	Carrier Common Line Access Service	KPU-11
	14.1.2	Recurring Charge 14.1.2.a Carrier Common Line 14.1.2.b Network Access Fee	KPU-11
14.2	Switched Access Service		KPU-12
	14.2.1	Non-Recurring Charges A. Access Order B. Service Date Change Charge C. Design Change Charge D. Miscellaneous Service Order Charge E. Transport – Installation F. Trunk Activation G. Interim NXX Translation H. Telecommunications Service Priority Charge	KPU-12
	14.2.2	Recurring Charges A. Entrance Facility B. Direct Trunked Transport C. Local Switching D. Information Surcharge E. Toll Free Data Base Access Service Queries F. Multiplexing G. Tandem Switched Transport	KPU-13 KPU-13.1 T
	14.2.3	Equal Access Recovery Charge	KPU-14
	14.2.4	Presubscription Change Charge	KPU-14

Issued: _____
Issued By: Ketchikan Public Utilities - Telephone Division
By: Dan Lindgren Title: Assistant Manager

RECEIVED

NOV 0 3 2008

STATE OF ALASKA
REGULATORY COMMISSION OF ALASKA

KETCHIKAN PUBLIC UTILITIES COMPANY SPECIFIC ACCESS SERVICES

Index to Rates and Charges - (Cont'd)

14.3	Special Access Service	KPU-15
	14.3.1a Surcharge for Special Access Service	KPU-15
	14.3.1b Telecommunications Service Priority Charge	KPU-15
	14.3.1c Special Access Ordering	KPU-15
	A. Access Order Charge	
	B. Service Date Change Charge	
	C. Design Change Charge	
	E. Miscellaneous Service Order Charge	
14.3.2	Voice Grade Service	KPU-16
	A. Channel Termination	KPU-16
	B. Channel Mileage	KPU-16
	C. Optional Features and Functions	KPU-16
	1. Bridging	KPU-16
	2. Conditioning per Termination	KPU-18
	3. Improved Return Loss for Effective Two-Wire to Four-Wire Transmission	KPU-19
	4. Customer-Specified Receive Level	KPU-19
	5. Multiplexing, per Arrangement Voice Grade to Telegraph Grade	KPU-19
	6. Signaling Capability	KPU-19
	7. Selective Signaling Arrangement	KPU-20
	8. Transfer Arrangement	KPU-20
	9. Public Packet Switching Network (PPSN)	KPU-20

RECEIVED

NOV 0 3 2008

STATE OF ALASKA
REGULATORY COMMISSION OF ALASKA

KETCHIKAN PUBLIC UTILITIES COMPANY SPECIFIC ACCESS SERVICES

Index to Rates and Charges - (Cont'd)

14.3 Special Access Service

14.3.3 Digital Data Service KPU-21

A. Channel Termination, per Termination KPU-21

B. Channel Mileage KPU-21
1. Channel Mileage Facility, per Mile
2 Channel Mileage Termination, per Termination

C. Optional Features and Functions KPU-22
1. Bridging, per Port
2. Loop Transfer Arrangement
3. Public Packet Switching Network Interface Arrangement

D. Channel Service Unit per Termination KPU-23

RECEIVED

NOV 0 3 2008

STATE OF ALASKA
REGULATORY COMMISSION OF ALASKA

KETCHIKAN PUBLIC UTILITIES COMPANY SPECIFIC ACCESS SERVICES

Index to Rates and Charges - (Cont'd)

14.3 Special Access Service

14.3.4 High Capacity Service KPU-23

A. Channel Termination per Termination KPU-23

B. Channel Mileage KPU-23

C. Optional Features and Functions KPU-24
1. Multiplexing
2. Automatic Loop Transfer
3. Transfer Arrangement
4. High Capacity Synchronization

D. Network Channel Terminating Equipment (NCTE) KPU-26
1. 1.544 Mbps per Termination
2. Automatic Loop Transer

14.4 Other Services KPU-26

14.4.1 Public Packet Data Network KPU-26

A. Frame Relay Access Service KPU-26
1. Connections
2. Access Customer Port
3 Permanent Virtual Connections

RECEIVED

MAY 17 2013

STATE OF ALASKA
REGULATORY COMMISSION OF ALASKA

KETCHIKAN PUBLIC UTILITIES COMPANY SPECIFIC ACCESS SERVICES

Index to Rates and Charges - (Cont'd)

14.5	Additional Engineering, Additional Labor And Miscellaneous Service – Non Switched Services	KPU-28	(T)
	14.5.1 Additional Engineering	KPU-28	
	14.5.2 Additional Labor	KPU-28	
	A. Installation and Repair	KPU-28	
	B. Stand-By	KPU-29	
	C. Testing and Maintenance with Other Telephone Companies or Other Labor	KPU-29	
	14.5.3 Miscellaneous Services	KPU-30	
	A. Additional Cooperative Acceptance Testing – Special Access	KPU-31	(T)
	B. Additional Manual Testing - Special Access	KPU-32	
	C. Maintenance of Service	KPU-32	(T)
14.6	Additional Engineering, Labor and Miscellaneous Services – Switched Access		(N)
	14.6.1 Additional Engineering		
	14.6.2 Additional Labor		
	A. Installation and Repair	KPU-33	
	B. Stand-By	KPU-33	
	C. Testing and Maintenance, Installation and Repair	KPU-33	
	D. Central Office Maintenance Technician	KPU-33	
	14.6.3 Miscellaneous Services		
	A. Additional Cooperative Acceptance Testing – Switched Access	KPU-34	
	B. Additional Automatic Testing – Switched Access to First Point of Switching	KPU-34	
	C. Additional Manual Testing – Switched Access to First Point of Switching	KPU-34	(N)

Issued: May 17, 2013
Issued By: Ketchikan Public Utilities - Telephone Division
By: Dan Lindgren Title: Assistant Manager

RECEIVED

DEC 19 2018

STATE OF ALASKA
REGULATORY COMMISSION OF ALASKA

KETCHIKAN PUBLIC UTILITIES COMPANY SPECIFIC ACCESS SERVICES

14. Rates and Charges

14.1 Carrier Common Line Access Service (T)

A. General Description

Carrier Common Line Access provides for the use of KPU's common lines by interexchange carriers (IXC) for access to KPU's end users to furnish intrastate service.

Carrier Common Line Access is provided where KPU's end users subscribe to local exchange telephone service.

RECEIVED

DEC 19 2018

STATE OF ALASKA
REGULATORY COMMISSION OF ALASKA

14. Rates and Charges

14.1 Carrier Common Line Access Service (Cont'd) (T)

B. Limitations

1. A telephone number is not provided with Carrier Common Line Access.

2. Detail billing is not provided for Carrier Common Line Access.

3. Directory listings are not included in the rates and charges for Carrier Common Line Access.

4. Intercept arrangements are not included in the rates and charges for Carrier Common Line Access.

C. Undertaking of KPU

KPU will provide the use of KPU's common lines by an IXC for access to end users. The procedure for recovering the Carrier Common Line revenue requirement are set forth in these rules and regulations.

D. Obligations of the Customer

1. Any switched access service associated with Carrier Common Line Access shall be ordered under other sections of this tariff.

2. The IXC facilities at the premises of the ordering IXC shall provide the necessary on-hook and off-hook supervision.

RECEIVED

DEC 1 9 2018

STATE OF ALASKA
REGULATORY COMMISSION OF ALASKA

KETCHIKAN PUBLIC UTILITIES COMPANY SPECIFIC ACCESS SERVICES

14. Rates and Charges

14.1 Carrier Common Line Access Service (Cont'd) (T)

E. Rate Regulation

1. The Carrier Common Line Access Charge will be billed as Essential Network Support to the Alaska Universal Service Administrataive Company (AUSAC) under this tariff in accordance with the regulations set forth below. **(N)** **(N)**

2. Annual Essential Network Support (ENS) is an amount equal to (i) the amount of carrier common line support received for the year ended December 31, 2016, plus (ii) the amount of carrier of last resort support received for the year ended December 31, 2016. The ENS amount is frozen at that level. The monthly rate will be determined by dividing the annual amount by twelve. **D N**

   a. The Company will continue to use the frozen Essential Network Support amount, to be recoverd from AUSAC pursuant to this tariff, in calculating the monthly ENS payable under this tariff until it is superseded by a subsequent order of the RCA. **D N**

RECEIVED
JUN 14 2011
STATE OF ALASKA
REGULATORY COMMISSION OF ALASKA

14. Rates and Charges

14.1 Common Line Access Service (Cont'd)

E. Rate Regulation

(D)

(D)

(D) Carrier and Area Specific Bulk Billing rules and regulations 2.c-h are removed per R-08-003(9)

RECEIVED

DEC 19 2018

STATE OF ALASKA
REGULATORY COMMISSION OF ALASKA

KETCHIKAN PUBLIC UTILITIES COMPANY SPECIFIC ACCESS SERVICES

14. Rates and Charges

14.1 Carrier Common Line Access Service (Cont'd) (T)

14.1.1 Carrier Common Line Access Service

14.1.2a Carrier Common Line Charge (C)
Reference Tariff Section 14.1

(D)

Essential Network Support (N)
Monthly Recurring Charge $79,646 (N)

14.1.2.b Network Access Fee (NAF)
Reference Tariff Section 4.1

Monthly Recurring Charge $5.75

D=Deleted Carrier Common Line Charge, Per Line

RECEIVED
JUN 22 2018
STATE OF ALASKA
REGULATORY COMMISSION OF ALASKA

14. Rates and Charges (Cont'd)

14.2 Switched Access Service

47 CFR § 51.909 required Transitional Intrastate Access Service (TIAS) rates be subject to the same rates and rate structure as functionally equivalent interstate rates, effective July 1, 2013.

14.2.1 Nonrecurring Charges	Rate	AECA Tariff Reference	
A. Access Order	$86.00	5.2	
B. Service Date Change Charge	$60.00	5.7	
C. Design Change Charge	$84.00	5.7	
D. Miscellaneous Service Order Charge, per occurrence	$123.00	5.7	
E. Transport – Installation per Entrance Facility		6.8	
1. Voice Grade Two Wire	$335.74		(R)
2. Voice Grade Four Wire	$335.74		(R)
3. DS1	$246.22		(R)
F. Trunk Activation per Order	$342.45	6.8	(R)
G. Interim NXX Translation per Order	ICB	6.8	(C)
H. Telecommunications Service Priority Charge per Circuit	$54.63	9.3	

RECEIVED
June 28, 2023
STATE OF ALASKA
REGULATORY COMMISSION OF ALASKA

KETCHIKAN PUBLIC UTILITIES COMPANY SPECIFIC ACCESS SERVICES

14. Rates and Charges (Cont'd)

14.2 Switched Access Service (Cont'd)

14.2.2 Recurring Charges

A. Entrance Facility, per termination	Rate	AECA Tariff Reference
1. Voice Grade Two Wire	$56.88	6.8
2. Voice Grade Four Wire	$91.02	6.8
3. DS1	$277.29	6.8

4. Collocation

The Entrance Facility charge specified in Section 6.2 of this tariff will not apply when: 1) the customer designated premises and the serving wire center are physically (including caged, cageless, shared and adjacent arrangements) or virtually collocated as those terms are used in 47 CFR 51.323, and (2) the customer obtains collocation for the purpose of interconnection with the Telephone Company's network for the transmission and routing of telephone exchange service, exchange access or both, and for the purpose of providing local exchange or exchange access services to its customers.

B. Direct Trunked Transport – DS1			
1. Direct Trunked Transport Facility, per mile	$19.00	6.2	
2. Direct Trunked Transport Termination, per termination	$98.57	6.2	
C. Local Switching Per Minute of Use			
Originating Non-Toll Free Rate	$0.023956	6.8	
Originating Toll Free Rate	$0.000000		(R)
Terminating	$0.000000	6.8	
D. Information Surcharge per 100 minutes, Premium			
Originating Non-Toll Free Rate	$0.191569	6.8	
Originating Toll Free Rate	$$0.00		(R)
Terminating	$0.00	6.8	

Issued:
Issued By: Ketchikan Public Utilities - Telephone Division
By: Dan Lindgren Title: Assistant Manager

RECEIVED
June 29, 2023
STATE OF ALASKA
REGULATORY COMMISSION OF ALASKA

KETCHIKAN PUBLIC UTILITIES COMPANY SPECIFIC ACCESS SERVICES

14. Rates and Charges (Cont'd)

14.2 Switched Access Service (Cont'd)

14.2.2 Recurring Charges

	Rate	AECA Tariff Reference	
E. Toll Free Data Base Access Service Query (Equal Access) Reference Tariff Section 6.8			
1. Basic per Query	$0.0002	6.8	(R)
2. Basic with Vertical Feature per Query	$0.0002	6.8	(R)
F. Multiplexing, per arrangement, DS3 to DS1	$577.49	6.2	
G. Tandem Switched Transport Per Minutes of Use			
1. Facility, Per Access Minute Per Mile	N/A	6.2	
2. Termination, Per Access Minute Per Termination	N/A	6.2	
3. Tandem Switching, Per Access Minute Per Tandem	N/A	6.2	

RECEIVED

APR 9 2014

STATE OF ALASKA
REGULATORY COMMISSION OF ALASKA

KETCHIKAN PUBLIC UTILITIES COMPANY SPECIFIC ACCESS SERVICES

14. Rates and Charges (Cont'd)

14.2 Switched Access Service (Cont'd)

14.2.3	Equal Access Recovery Charge Reference Tariff Section 6.8		
	Per Presubscribed Equal Access Line	n/a	
14.2.4	Presubscription Change Charge, per line or trunk, submitted manually	$5.50	(N)

RECEIVED

NOV 0 3 2008

STATE OF ALASKA
REGULATORY COMMISSION OF ALASKA

KETCHIKAN PUBLIC UTILITIES COMPANY SPECIFIC ACCESS SERVICES

14. Rates and Charges (Cont'd)

14.3 Special Access Service

14.3.1a Surcharge For Special Access Service
Reference Tariff Section 7.3

Per Voice Grade Equivalent	$25.00

14.3.1b Telecommunications Service Priority Charge
Reference Tariff Section 9.3

Per Circuit – Monthly Recurring Charge	$1.00
Per Circuit – Non-Recurring Charge	$55.00

14.3.1c Special Access Ordering
Reference Tariff Section 5.2 and 5.8

A. Access Order Charge per Order $97.00

B. Service Date Change Charge $44.00

A Service Date Change Charge will apply, on a per order per occurrence basis, for each service date changed. The Access Order Charge as specified in 14.3.1c(A) preceding does not apply.

C. Design Change Charge $44.00

The Design Change Charge will apply on a per order per occurrence basis, for each order requiring design change.

D. Miscellaneous Service Order Charge per Occurrence $44.00

RECEIVED
JUL 0 2 2009
STATE OF ALASKA
REGULATORY COMMISSION OF ALASKA

KETCHIKAN PUBLIC UTILITIES COMPANY SPECIFIC ACCESS SERVICES

14. Rates and Charges (Cont'd)

14.3 Special Access Service (Cont'd)

14.3.2 Voice Grade Service
Reference Tariff Section 7.4

A. Channel Termination Per Termination*

Two-Wire, Monthly Recurring Charge	$111.65	R
Four-Wire, Monthly Recurring Charge	178.60	R
Non-Recurring Charge	325.00	

B. Channel Mileage

1. Channel Mileage Facility

Two-Wire, Monthly Recurring Charge per Mile	n/a
Four-Wire, Monthly Recurring Charge per Mile	n/a

2. Channel Mileage Termination Per Termination

Two-Wire, Monthly Recurring Charge	n/a
Four-Wire Monthly Recurring Charge	n/a

L

N

N

L

* The Channel Termination charge specified in Section 7.2.1(A) of this tariff will not apply when:
1) the customer designated premises and the serving wire center are physically (including caged, cageless, shared and adjacent arrangements) or virtually collocated as those terms are used in 47 CFR 51.323 and
2) the customer obtains collocation for the purpose of interconnection with the Telephone Company's network for the transmission and routing of telephone exchange service, exchange access or both, and for the purpose of providing local exchange or exchange access services to its customers.

L = Optional Features and Functions relocated to Tariff Sheet No. 16.1.

RECEIVED
JUL 0 2 2009
STATE OF ALASKA
REGULATORY COMMISSION OF ALASKA

KETCHIKAN PUBLIC UTILITIES COMPANY SPECIFIC ACCESS SERVICES

14. Rates and Charges (Cont'd)

14.3 Special Access Service (Cont'd) L

14.3.2 Voice Grade Service
Reference Tariff Section 7.4

C. Optional Features And Functions

1. Bridging

a. Voice Bridging, Per Port

Two-Wire, Monthly Recurring Charge	$6.54
Four-Wire, Monthly Recurring Charge	6.54
Non-Recurring Charge	n/a

b. Data Bridging, Per Port

Two-Wire, Monthly Recurring Charge	$6.54
Four-Wire, Monthly Recurring Charge	6.54
Non-Recurring Charge	n/a

c. Telephoto Bridging, Per Port

Two-Wire, Monthly Recurring Charge	$6.54
Four-Wire, Monthly Recurring Charge	$6.54
Non-Recurring Charge	n/a

L

L = Material moved from Tariff Sheet No. 16.

RECEIVED

NOV 0 3 2008

STATE OF ALASKA
REGULATORY COMMISSION OF ALASKA

KETCHIKAN PUBLIC UTILITIES COMPANY SPECIFIC ACCESS SERVICES

14. Rates and Charges (Cont'd)

14.3 Special Access Service (Cont'd)

14.3.2 Voice Grade Service (Cont'd)
Reference Tariff Section 7.4

C. Optional Features And Functions (Cont'd)

1. Bridging (Cont'd)

d. Dataphone Select-A-Station

Sequential Arrangement, Ports per Channel Connected	
Two-Wire, Monthly Recurring Charge	$ 22.34
Four-Wire, Monthly Recurring Charge	118.51
Non-Recurring Charge	n/a
Addressable Arrangement, Ports Per Channel Connected	
Two-Wire, Monthly Recurring Charge	$ 23.91
Four-Wire, Monthly Recurring Charge	103.51
Non-Recurring Charge	n/a

e. Telemetry And Alarm Bridging

Active Bridging Channel Connections, Per Channel Connected	
Split Band, Monthly Recurring Charge	$10.43
Summation, Monthly Recurring Charge	4.07
Non-Recurring Charges	n/a
Passive Bridging Channel Connections, Per Channel Connected	
Monthly Recurring Charge	$0.28
Non-Recurring Charges	n/a

RECEIVED

NOV 0 3 2008

STATE OF ALASKA
REGULATORY COMMISSION OF ALASKA

KETCHIKAN PUBLIC UTILITIES COMPANY SPECIFIC ACCESS SERVICES

14. Rates and Charges (Cont'd)

14.3 Special Access Service (Cont'd)

14.3.2 Voice Grade Service (Cont'd)
Reference Tariff Section 7.4

C. Optional Features And Functions (Cont'd)

2. Conditioning Per Termination

a. C Type	
Monthly Recurring Charge	$7.25
Non-Recurring Charge	n/a
b. Improved Attenuation Distortion	
Monthly Recurring Charge	n/a
Non-Recurring Charge	n/a
c. Improved Envelope Delay Distortion	
Monthly Recurring Charge	n/a
Non-Recurring Charge	n/a
d. Data Capability	
Monthly Recurring Charge	$4.98
Non-Recurring Charge	n/a
e. Telephoto Capability	
Monthly Recurring Charge	$9.09
Non-Recurring Charge	n/a
f. Telephoto Capability (VG11 & VGC)	
Monthly Recurring Charge	n/a
Non-Recurring Charge	n/a
g. Sealing Current	
Monthly Recurring Charge	n/a
Non-Recurring Charge	n/a

RECEIVED

NOV 0 3 2008

STATE OF ALASKA
REGULATORY COMMISSION OF ALASKA

KETCHIKAN PUBLIC UTILITIES COMPANY SPECIFIC ACCESS SERVICES

14. Rates and Charges (Cont'd)

14.3 Special Access Service (Cont'd)

14.3.2 Voice Grade Service (Cont'd)
Reference Tariff Section 7.4

C. Optional Features And Functions (Cont'd)

3. Improved Return Loss For Effective Two-Wire To Four-Wire Transmission Per Termination

Two-Wire, Monthly Recurring Charge	$12.88
Four-Wire, Monthly Recurring Charge	12.88
Non-Recurring Charge	n/a

4. Customer-Specified Receive Level, Per Two-Wire Termination

Monthly Recurring Charge	$8.86
Non-Recurring Charge	n/a

5. Multiplexing, Per Arrangement Voice To Telegraph Grade

Monthly Recurring Charge	$227.74
Non-Recurring Charge	n/a

6. Signaling Capability

Monthly Recurring Charge	
- Per Termination	$13.04
- VG1 – Loop Start Either End	n/a
- VG1 – Ground Start Either End	n/a
- VG2 – Loop Start Closed End Only	n/a
- VG2 – Ground Start to Centrex Station Line Only	n/a
- VG2 – 20HZ Ringdown	n/a
- VG3, VG7 – Loop Start	n/a
- VG3, VG7 – Ground Start	n/a
- VG3, VG7 – E & M	n/a
- VG8, VG9 – Loop Start at Closed End	n/a
- VG8, VG9 – E & M, SF, DX at Open End	n/a
- VG8, VG9 – E & M at Closed End	n/a
Non-Recurring Charge	n/a

Pursuant to:
U-08-147(1)

Effective: December 20, 2008

Issued: November 3, 2008
Issued By: Ketchikan Public Utilities - Telephone Division
By: Van Abbott Title: Manager

RECEIVED

NOV 0 3 2008

STATE OF ALASKA
REGULATORY COMMISSION OF ALASKA

KETCHIKAN PUBLIC UTILITIES COMPANY SPECIFIC ACCESS SERVICES

14. Rates and Charges (Cont'd)

14.3 Special Access Service (Cont'd)

14.3.2 Voice Grade Service (Cont'd)
Reference Tariff Section 7.4

C. Optional Features And Functions (Cont'd)

7. Selective Signaling Arrangement, Per Arrangement

Monthly Recurring Charge	$6.54
Non-Recurring Charge	n/a

8. Transfer Arrangement (Key Activated* or Dial Up)**

Per Four Port Arrangement, Including Control Channel Termination (See Note)

Monthly Recurring Charge	$3.15
Non-Recurring Charge	n/a

Per Five Port Arrangement, Including Control Channel Termination (See Note)

Monthly Recurring Charge	$7.20
Non-Recurring Charge	n/a

9. Public Packet Switching Network (PPSN) Interface Arrangement, Per Arrangement

Monthly Recurring Charge	ICB
Non-Recurring Charge	n/a

* The key activated control channel is rated as a Voice Grade Channel Termination and Channel Mileage, if applicable.

** The Dial-Up option requires the customer to purchase the Controller Arrangement.

Note: An additional Channel Termination Charge will apply whenever a spare channel is configured as a leg to the customer designated premises. Additional channel mileage charges will also apply when the transfer arrangement is not located in the customer designated premises serving wire center.

Pursuant to:
U-08-147(1)

Effective: December 20, 2008

Issued: November 3, 2008
Issued By: Ketchikan Public Utilities - Telephone Division
By: Van Abbott Title: Manager

RECEIVED

NOV 0 3 2008

STATE OF ALASKA
REGULATORY COMMISSION OF ALASKA

KETCHIKAN PUBLIC UTILITIES COMPANY SPECIFIC ACCESS SERVICES

14. Rates and Charges (Cont'd)

14.3 Special Access Service (Cont'd)

14.3.3 Digital Data Service
Reference Tariff Section 7.7

A. Channel Termination Per Termination

Monthly Recurring Charge	
- 2.4 Kbps	$ 80.45
- 4.8 Kbps	80.45
- 9.6 Kbps	80.45
- 19.2 Kbps	80.45
- 56.0 Kbps	80.45
- 64.0 Kbps	80.45
Non-Recurring Charge	353.00

B. Channel Mileage

1. Channel Mileage Facility Per Mile

Monthly Recurring Charge	
- 2.4 Kbps	n/a
- 4.8 Kbps	n/a
- 9.6 Kbps	n/a
- 19.2 Kbps	n/a
- 56.0 Kbps	n/a
- 64.0 Kbps	n/a
Non-Recurring Charge	n/a

2. Channel Mileage Termination per Termination

Monthly Recurring Charge	
- 2.4 Kbps	n/a
- 4.8 Kbps	n/a
- 9.6 Kbps	n/a
- 19.2 Kbps	n/a
- 56.0 Kbps	n/a
- 64.0 Kbps	n/a
Non-Recurring Charge	n/a

RECEIVED

NOV 0 3 2008

STATE OF ALASKA
REGULATORY COMMISSION OF ALASKA

14. Rates and Charges (Cont'd)

14.3 Special Access Service (Cont'd)

14.3.3 Digital Data Service (Cont'd)
Reference Tariff Section 7.7

C. Optional Features And Functions

1. Bridging, Per Port

Monthly Recurring Charge	$7.91
Non-Recurring Charge	n/a

2. Loop Transfer Arrangement (Key Activated* or Dial Up) Per Four Port Arrangement (See Note)**

Monthly Recurring Charge	$6.26
Non-Recurring Charge	n/a

3. Public Packet Switching Network

a. Interface Arrangement – 9.6 Kbps

Monthly Recurring Charge	ICB
Non-Recurring Charge	n/a

b. Interface Arrangement – 56.0 Kbps

Monthly Recurring Charge	ICB
Non-Recurring Charge	n/a

* The key activiated control channel is rated as a Voice Grade Channel Termination and Channel Mileage, if applicable.

** The Dial Up option requires the customer to purchase the Controller Arrangement.

Note: An additional Channel Termination Charge will apply whenever a spare channel is configured as a leg to the customer designated premises. Additional channel mileage charges will also apply when the transfer arrangement is not located in the customer designated premises serving wire center.

RECEIVED
JUL 0 2 2009
REGULATORY COMMISSION OF ALASKA

KETCHIKAN PUBLIC UTILITIES COMPANY SPECIFIC ACCESS SERVICES

14. Rates and Charges (Cont'd)

14.3 Special Access Service (Cont'd)

14.3.3 Digital Data Service (Cont'd)
Reference Tariff Section 7.7

D. Channel Service Unit Per Termination

Monthly Recurring Charge	
- 2.4 Kbps	$31.27
- 4.8 Kbps	31.27
- 9.6 Kbps	31.27
- 56.0 Kbps	31.27
Non-Recurring Charge	n/a

14.3.4 High Capacity Service
Reference Tariff Section 7.8

A. Channel Termination Per Termination

Monthly Recurring Charge		
- 1.544 Mbps	$584.25	I
- 3.152 Mbps	ICB	
- 6.312 Mbps	ICB	
- 44.736 Mbps	ICB	
- 274.176 Mbps	ICB	
Non-Recurring Charge – 1.544 Mbps	378.00	
Non-Recurring Charge – All Others	ICB	

B. Channel Mileage

1. Facility Per Mile

Monthly Recurring Charge	
- 64.0 Kpbs	n/a
- 1.544 Mbps	n/a
- 3.152 Mbps	n/a
- 6.312 Mbps	n/a
- 44.736 Mbps	n/a
- 274.176 Mbps	n/a
Non-Recurring Charge	n/a

RECEIVED

NOV 0 3 2008

STATE OF ALASKA
REGULATORY COMMISSION OF ALASKA

KETCHIKAN PUBLIC UTILITIES COMPANY SPECIFIC ACCESS SERVICES

14. Rates and Charges (Cont'd)

14.3 Special Access Service (Cont'd)

14.3.4 High Capacity Service (Cont'd)
Reference Tariff Section 7.8

B. Channel Mileage (Cont'd)

2. Per Termination

Monthly Recurring Charge	
- 64.0 Kbps	n/a
- 1.544 Mbps	n/a
- 3.152 Mbps	n/a
- 6.312 Mbps	n/a
- 44.736 Mbps	n/a
- 274.176 Mbps	n/a
Non-Recurring Charge	n/a

C. Optional Features and Functions

1. Multiplexing Per Arrangement

Monthly Recurring Charge	
- DS4 to DS1	ICB
- DS3 to DS1	$477.57
- DS2 to DS1	ICB
- DS1C to DS1	ICB
- DS1 to Voice*	184.38
- DS1 to DS0	184.38
- DS0 to Subrates – Up to 20 2.4 Kbps Services	392.68
- DS0 to Subrates – Up to 10 4.8 Kbps Services	266.82
- DS0 to Subrates – Up to 5 9.6 Kbps Services	236.61
-Non-Recurring Charge	n/a

* A channel of this DS1 to the Hub can be used for Digital Data Service.

RECEIVED

NOV 0 3 2008

STATE OF ALASKA
REGULATORY COMMISSION OF ALASKA

KETCHIKAN PUBLIC UTILITIES COMPANY SPECIFIC ACCESS SERVICES

14. Rates and Charges (Cont'd)

14.3 Special Access Service (Cont'd)

14.3.4 High Capacity Service (Cont'd)
Reference Tariff Section 7.8

C. Optional Features And Functions (Cont'd)

2. Automatic Loop Transfer, Per Arrangement

Monthly Recurring Charge	$159.08
Non-Recurring Charge	n/a

3. Transfer Arrangement (Key Activated* or Dial Up) Per Four Port Arrangement, Including Control Channel Termination (See Note)**

Monthly Recurring Charge	$173.39
Non-Recurring Charge	n/a

4. High Capacity Synchronization

Monthly Recurring Charge	n/a
Non-Recurring Charge	n/a

* The key activated control channel is rated as a Voice Grade Channel Termination and Channel Mileage, if applicable.

** The Dial Up option requires the customer to purchase the Controller Arrangement.

Note: An additional Channel Termination Charge will apply whenever a spare channel is configured as a leg to the customer designated premises. Additional channel mileage charges will also apply when the transfer arrangement is not located in the customer designated premises serving wire center.

RECEIVED

NOV 0 3 2008

STATE OF ALASKA
REGULATORY COMMISSION OF ALASKA

KETCHIKAN PUBLIC UTILITIES COMPANY SPECIFIC ACCESS SERVICES

14. Rates and Charges (Cont'd)

14.3 Special Access Service (Cont'd)

14.3.4 High Capacity Service (Cont'd)
Reference Tariff Section 7.8

D. Network Channel Terminating Equipment (NCTE),

1. 1.544 Mbps Per Termination (Note)

Monthly Recurring Charge	$90.22
Non-Recurring Charge	n/a

2. Automatic Loop Transfer, Per Termination (Note)

Monthly Recurring Charge	$362.47
Non-Recurring Charge	n/a

14.4 Other Services

14.4.1 Public Packet Data Network

A. Frame Relay Access Service
Reference Tariff Section 12

1. Connections – End User Port (Per Port)

Monthly Recurring Charge	
- 56.0 Kbps	n/a
- 64.0 Kbps	n/a
- 1.544 Mbps	n/a
Non-Recurring Charge	n/a

2. Access Customer Port (Per Port)

Monthly Recurring Charge	
- 1.544 Mbps	n/a
Non-Recurring Charge	n/a

Note 1: NCTE will only be provided under tariff if they existed in the Telephone Company's inventory as of November 18, 1983.

Pursuant to:
U-08-147(1)

Effective: December 20, 2008

Issued: November 3, 2008
Issued By: Ketchikan Public Utilities - Telephone Division
By: Van Abbott Title: Manager

RECEIVED

NOV 0 3 2008

STATE OF ALASKA
REGULATORY COMMISSION OF ALASKA

KETCHIKAN PUBLIC UTILITIES COMPANY SPECIFIC ACCESS SERVICES

14. Rates and Charges (Cont'd)

14.4 Other Services

14.4.1 Public Packet Data Network

A. Frame Relay Access Service
Reference Tariff Section 12

3. Permanent Virtual Connections (PVC)

a. Standard – CIR

Monthly Recurring Charge	
- 8 Kbps	n/a
- 16 Kbps	n/a
- 28 Kbps	n/a
- 32 Kbps	n/a
- 56 Kbps	n/a
- 64 Kbps	n/a
- 128 Kbps	n/a
- 192 Kbps	n/a
- 256 Kbps	n/a
- 384 Kbps	n/a
- 512 Kbps	n/a
- 768 Kbps	n/a
Non-Recurring Charge	n/a

RECEIVED

MAY 17 2013

STATE OF ALASKA
REGULATORY COMMISSION OF ALASKA

KETCHIKAN PUBLIC UTILITIES COMPANY SPECIFIC ACCESS SERVICES

14. Rates and Charges (Cont'd)

14.5 Additional Engineering, Additional Labor And Miscellaneous Service

Reference Tariff Section 9*
Applies to all Services Except Switched Access. (N)
See Section 14.6 for Switched Access Additional Engineering, Labor, and Miscellaneous Services. (N)

14.5.1 Additional Engineering

A. Basic Time, Normally Scheduled Working Hours, Per Engineer
Each Half Hour or Fraction Thereof* $27.19

B. Overtime, Outside of Normally Scheduled Working Hours, Per Engineer
Each Half Hour or Fraction Thereof* $40.79

C. Premium Time, Outside of Scheduled Work Day, Per Engineer
Each Half Hour or Fraction Thereof* $54.38

14.5.2 Additional Labor

A. Installation and Repair

1. **Overtime, Outsite of Normally Scheduled Working Hours on a Scheduled Work Day, Per Technician**
   Each Half Hour or Fraction Thereof* $32.90

2. **Premium Time, Outside of Normally Scheduled Work Day, Per Technician**
   Each Half Hour or Fraction Thereof* $43.86

* A call out of a Telephone Company employee at a time not consecutive with the employee's schedules working period is subject to a minimum charge of four hours.

RECEIVED

NOV 0 3 2008

STATE OF ALASKA
REGULATORY COMMISSION OF ALASKA

14. Rates and Charges (Cont'd)

14.5 Additional Engineering, Additional Labor And Miscellaneous Service (Cont'd)
Reference Tariff Section 9

14.5.2 Additional Labor

B. Stand-By

1. Basic Time, Normally Scheduled Working Hours, Per Technician
Each Half Hour or Fraction Thereof* $21.67

2. Overtime, Outside of Normally Scheduled Working Hours on a Scheduled Work Day, Per Technician
Each Half Hour or Fraction Thereof* $32.51

3. Premium Time, Outside of Scheduled Work Day, Per Technician
Each Half Hour or Fraction Thereof* $43.34

C. Testing and Maintenance with Other Telephone Companies, or Other Labor

1. Installation and Repair

a. Basic Time, Normally Scheduled Working Hours, Per Technician
Each Half Hour or Fraction Thereof* $21.93

b. Overtime, Outside of Normally Scheduled Working Hours on a Scheduled Work Day, Per Technician
Each Half Hour or Fraction Thereof* $32.90

c. Premium Time, Outside of Scheduled Work Day, Per Technician
Each Half Hour or Fraction Thereof* $43.86

* A call-out of a Telephone Company employee at a time not consecutive with the employee's scheduled working period is subject to a minimum charge of four hours.

RECEIVED

MAY 17 2013

STATE OF ALASKA
REGULATORY COMMISSION OF ALASKA

KETCHIKAN PUBLIC UTILITIES COMPANY SPECIFIC ACCESS SERVICES

14. Rates and Charges (Cont'd)

14.5 Additional Engineering, Additional Labor And Miscellaneous Service (Cont'd)
Reference Tariff Section 9

14.5.2 Additional Labor (Cont'd)

C. Testing And Maintenance with Other Telephone Companies, or Other Labor (Cont'd)

2. Central Office Maintenance

a. Basic Time, Normally Scheduled Working Hours, Per Technician Each Half Hour or Fraction Thereof*	$23.81
b. Overtime, Outside of Normally Scheduled Working Hours on a Scheduled Work Day, Per Technician Each Half Hour or Fraction Thereof*	$35.72
c. Premium Time, Outside of Scheduled Work Day, Per Technician Each Half Hour or Fraction Thereof*	$47.62

(L)

(L)

* A call-out of a Telephone Company employee at a time not consecutive with the employee's scheduled working period is subject to a minimum charge of four hours.

L = Miscellaneous Services relocated to Original Sheet No. KPU – 34

RECEIVED

JUN 0 6 2013

STATE OF ALASKA
REGULATORY COMMISSION OF ALASKA

KETCHIKAN PUBLIC UTILITIES COMPANY SPECIFIC ACCESS SERVICES

14. Rates and Charges (Cont'd)

14.5 Additional Engineering, Additional Labor And Miscellaneous Service (Cont'd)
Reference Tariff Section 9

14.5.3 Miscellaneous Services

(L)

(L)

A. Additional Cooperative Acceptance Testing – Special Access (T)

1. Tesing Periods – Each Half Hour or Fraction Thereof
   Basic Time, Overtime* and Premium Time*

   See rates for Additional Labor as set forth in 14.5.2(C).

* A call-out of a Telephone Company employee at a time not consecutive with the employee's scheduled working period is subject to a minimum charge of four hours.

L = Relocated to Original Sheet No. KPU – 34

RECEIVED

MAY 17 2013

STATE OF ALASKA
REGULATORY COMMISSION OF ALASKA

KETCHIKAN PUBLIC UTILITIES COMPANY SPECIFIC ACCESS SERVICES

14. Rates and Charges (Cont'd)

14.5 Additional Engineering, Additional Labor And Miscellaneous Service (Cont'd)
Reference Tariff Section 9

14.5.3 Miscellaneous Services - Cont'd

B. Additional Manual Testing – Special Access (T)

1. Testing Periods – Each Half Hour Or Fraction Thereof
   Basic Time, Overtime* and Premium Time*

   See rates for Additional Labor as set forth in 14.5.2(C).

C. Maintenance of Service (T)

1. Maintenance of Service Periods – Each Half Hour or Fraction Thereof
   Basic Time, Overtime* and Premium Time*

   See rates for Additional Labor as set forth in 14.5.2(C).

* A call-out of a Telephone Company employee at a time not consecutive with the employee's scheduled working period is subject to a minimum charge of four hours.

RECEIVED

APR 9 2014

STATE OF ALASKA
REGULATORY COMMISSION OF ALASKA

KETCHIKAN PUBLIC UTILITIES COMPANY SPECIFIC ACCESS SERVICES

14. Rates and Charges (Cont'd)

14.6 Additional Engineering, Labor, and Miscellaneous Services – Switched Access Each Half Hour, or Fraction Thereof. Reference Tariff Section 9. (T)

	Rate	
14.6.1 Additional Engineering Periods, Each Half Hour, or Fraction Thereof.		(T)
A. Basic Time, per engineer	$31.03	(N)
B. Overtime, per engineer	$46.55	
C. Premium Time, per engineer	$62.06	
14.6.2 Additional Labor Periods, Each Half Hour, or Fraction Thereof.		
A. Installation or Repair		
1. Overtime, per technician	$47.57*	
2. Premium Time, per technician	$63.42*	
B. Stand by		
1. Basic Time, per technician	$21.18*	
2. Overtime, per technician	$31.77*	
3. Premium Time, per technician	$42.36*	
C. Testing and Maintenance, Installation and Repair		
1. Basic Time, per technician	$31.71	
2. Overtime, per technician	$47.57*	
3. Premium Time, per technician	$63.42*	
D. Central Office Maintenance Technician		
1. Basic Time, per technician	$34.66	
2. Overtime, per technician	$51.99*	
3. Premium Time, per technician	$69.32*	(N)

* A call-out of a Telephone Company employee at a time not consecutive with the employee's scheduled working period is subject to a minimum charge of four hours.

RECEIVED
APR 15 2014
STATE OF ALASKA
REGULATORY COMMISSION OF ALASKA

14. Rates and Charges (Cont'd)

14.6 Additional Engineering, Additional Labor And Miscellaneous Service – Switched Access (Cont'd)
Reference Tariff Section 9

14.6.3 Miscellaneous Services

A. Additional Cooperative Acceptance Testing – Switched Access

1. Testing Periods Basic Time, Overtime and Premium Time*
See rates for Additional Labor as set forth in 14.6.2(C).

B. Additional Automatic Testing – Switched Access to First Point of Switching**
Per Test Per Transmission Path

	Rate	AECA Tariff Reference	
1. Gain-Slope Tests	$2.89	9.3.1	(T) (N)
2. C-Notched Noise Tests	$2.89	9.3.1	
3. 1004 Hz Loss	$2.89	9.3.1	
4. C-Message Noise	$2.89	9.3.1	
5. Balance (ret. loss)	$2.89	9.3.1	(N) (D)

C. Additional Manual Testing – Switched Access to First Point of Switching

Additional Tests – Per Technician – Each Half Hour or Fraction Thereof
1. Gain-Slope Tests
2. C-Notched Noise Tests
3. Any Other Agreed to Tests

See rates for Additional Labor as set for in 14.6.2(C).

* A call-out of a Telephone Company employee at a time not consecutive with the employee's scheduled working period is subject to a minimum charge of four hours.

** 1004 Hz Loss, C-Message Noise and Balance are non-chargeable routine tests; however, they may be requested on an as needed or more than routine schedule basis, in which case the charges herein apply.

RECEIVED

NOV 0 4 2008

STATE OF ALASKA
REGULATORY COMMISSION OF ALASKA

INTERIOR TELEPHONE COMPANY, INC.
COMPANY SPECIFIC ACCESS SERVICES
RATES AND CHARGES

Interior Telephone Company, Inc.
201 E 56th Ave
Anchorage, AK 99518

RECEIVED
DEC 14 2018
STATE OF ALASKA
REGULATORY COMMISSION OF ALASKA

INTERIOR TELEPHONE COMPANY SPECIFIC ACCESS SERVICES

Index to Rates and Charges

14.1	Carrier Common Line Access Service	ITC-5	(T)
	14.1.2 Recurring Charge		
	14.1.2.a Carrier Common Line	ITC-9	
	14.1.2.b Network Access Fee	ITC-9	
14.2	Switched Access Service		
	14.2.1 Non-Recurring Charges	ITC-10	
	14.2.2 Recurring Charges	ITC-11	
	14.2.3 Equal Access Recovery Charge	ITC-12	
	14.2.4 Presubscription Change Charge	ITC-12	
	14.2.5 Assumed Minutes Of Use	ITC-12	
14.3	Special Access Service		
	14.3.1a Surcharge For Special Access Service	ITC-13	
	14.3.1b Telecommunications Service Priority Charge	ITC-13	
	14.3.1c Special Access Ordering	ITC-13	
	14.3.2 Billing for Special Access Service	ITC-14	

RECEIVED

NOV 0 4 2008

STATE OF ALASKA
REGULATORY COMMISSION OF ALASKA

INTERIOR TELEPHONE COMPANY SPECIFIC ACCESS SERVICES

Index to Rates and Charges - (Cont'd)

14.3 Special Access Service - Continued

14.3.2 Voice Grade Service

A. Channel Termination

B. Channel Mileage
- **1. Channel Mileage Facility** ITC-14
- **2. Channel Mileage Termination** ITC-14

C. Optional Features And Functions ITC-14
- **1. Bridging** ITC-15
- **2. Conditioning Per Termination** ITC-16
- **3. Improved Return Loss For Effective Two-Wire To Four-Wire Transmission** ITC-17
- **4. Customer-Specified Receive Level** ITC-17
- **5. Multiplexing, Per Arrangement Voice Grade To Telegraph Grade** ITC-17
- **6. Signaling Capability** ITC-17
- **7. Selective Signaling Arrangement** ITC-18
- **8. Transfer Arrangement-Key Activated Or Dial Up** ITC-18
- **9. Public Packet Switching Network (PPSN)** ITC-18

RECEIVED

NOV 0 4 2008

STATE OF ALASKA
REGULATORY COMMISSION OF ALASKA

INTERIOR TELEPHONE COMPANY SPECIFIC ACCESS SERVICES

Index to Rates and Charges - (Cont'd)

14.3 Special Access Service - Continued

14.3.3 Digital Data Service

A. Channel Termination, Per Termination	**ITC-19**
B. Channel Mileage	
1. Channel Mileage Facility, Per Mile	**ITC-19**
2 Channel Mileage Termination,Per Termination	**ITC-19**
C. Optional Features And Functions	
1. Bridging, Per Port	**ITC-20**
2. Loop Transfer Arrangement	**ITC-20**
3. Public Packet Switching Network Interface Arrangement	**ITC-20**
D. Channel Service Unit Per Termination	**ITC-20**

14.3.4 High Capacity Service

A. Channel Termination Per Termination	**ITC-21**
B. Channel Mileage	**ITC-21**
C. Optional Features And Functions	
1. Multiplexing -	**ITC-22**
2. Automatic Loop Transfer	**ITC-22**
3. Transfer Arrangement	**ITC-22**
D. Network Channel Terminating Equipment (NCTE)	**ITC-23**

14.4 Other Services

14.4.1 Public Packet Data Network	**ITC-24**

RECEIVED

NOV 0 4 2008

STATE OF ALASKA
REGULATORY COMMISSION OF ALASKA

INTERIOR TELEPHONE COMPANY SPECIFIC ACCESS SERVICES

Index to Rates and Charges - (Cont'd)

14.5 Additional Engineering, Additional Labor And Miscellaneous Service

14.5.1 Additional Engineering ITC-25

14.5.2 Additional Labor

- **A. Installation And Repair** ITC-25
- **B. Standby** ITC-26
- **C. Testing And Maintenance With Other Telephone Companies Or Other Labor** ITC-27

14.5.3 Miscellaneous Services

- **A. Additional Cooperative Acceptance Testing-Switched Access** ITC-28
- **B. Additional Automatic Testing – Switched Access to First Point of Switching** ITC-28
- **C. Additional Manual Testing – Switched Access to First Point of Switching** ITC-28
- **D. Additional Cooperative Acceptance Testing-Special Access** ITC-28
- **E. Additional Manual Testing - Special Access** ITC-29
- **F. Maintenance Of Service** ITC-29

RECEIVED
DEC 14 2018
STATE OF ALASKA
REGULATORY COMMISSION OF ALASKA

INTERIOR TELEPHONE COMPANY SPECIFIC ACCESS SERVICES

14. Rates and Charges

14.1 Carrier Common Line Access Service (T)

A. General Description

Carrier Common Line Access provides for the use of ITC's common lines by interexchange carriers (IXC) for access to ITC's end users to furnish intrastate service.

Carrier Common Line Access is provided where ITC's end users subscribe to local exchange telephone service.

RECEIVED

DEC 14 2018

STATE OF ALASKA
REGULATORY COMMISSION OF ALASKA

14. Rates and Charges

14.1 Carrier Common Line Access Service (Cont'd) (T)

B. Limitations

1. A telephone number is not provided with Carrier Common Line Access.

2. Detail billing is not provided for Carrier Common Line Access.

3. Directory listings are not included in the rates and charges for Carrier Common Line Access.

4. Intercept arrangements are not included in the rates and charges for Carrier Common Line Access.

C. Undertaking of ITC

ITC will provide the use of ITC's common lines by an IXC for access to end users. The procedure for recovering the Carrier Common Line revenue requirement are set forth in these rules and regulations.

D. Obligations of the Customer

1. Any switched access service associated with Carrier Common Line Access shall be ordered under other sections of this tariff.

2. The IXC facilities at the premises of the ordering IXC shall provide the necessary on-hook and off-hook supervision.

RECEIVED
DEC 14 2018
STATE OF ALASKA
REGULATORY COMMISSION OF ALASKA

INTERIOR TELEPHONE COMPANY SPECIFIC ACCESS SERVICES

14. Rates and Charges

14.1 Carrier Common Line Access Service (Cont'd) (T)

E. Rate Regulation

A. The Carrier Common Line Access Charge will be billed as Essential Network Support to the Alaska Universal Service Administrative Company (AUSAC) under this tariff in accordance with the regulations set forth below. (C) (C)

B. Annual Essential Network Support is an amount equal to (i) the amount of carrier common line support received for the year ended December 31, 2016, plus (ii) the amount of carrier of last resort support received for the year ended December 31, 2016. The ENS amount is frozen at that level. The monthly rate will be determined by dividing the annual ENS by twelve. (D)(N)

C. The Company will continue to use the frozen Essential Network Support amount, to be recovered from AUSAC pursuant to this tariff, in calculating the monthly ENS payable under this tariff until it is superseded by a subsequent order of the RCA. (D)(N)

RECEIVED
JUN 14 2011
STATE OF ALASKA
REGULATORY COMMISSION OF ALASKA

INTERIOR TELEPHONE COMPANY SPECIFIC ACCESS SERVICES

14. Rates and Charges

(D)

(D)

RECEIVED
DEC 14 2018
STATE OF ALASKA
REGULATORY COMMISSION OF ALASKA

INTERIOR TELEPHONE COMPANY SPECIFIC ACCESS SERVICES

14. Rates and Charges

14.1 Carrier Common Line Access Service (Cont'd) (T)

14.1.1 Carrier Common Line Access Service

Regulations concerning Carrier Common Line Access are set forth in 14.1 preceding.

(D)

14.1.2.a Recurring Charge - Carrier Common Line

This charge is billed to AUSAC as described in 14.1 preceding. (N)
(D)

(D)

	Monthly Rate	
		(D)
Essential Network Support	$94,365	(N)
		(D)

(D)

14.1.2.b Recurring Charge – Network Access Fee (NAF)

This charge is applied to the end user for intrastate access as described in Section 4.1.

Network Access Fee	$5.75/month

RECEIVED
JUL 23 2024
STATE OF ALASKA
REGULATORY COMMISSION OF ALASKA

INTERIOR TELEPHONE COMPANY SPECIFIC ACCESS SERVICES

14. Rates and Charges (Cont'd)

14.2 Switched Access Service

14.2.1 Non-Recurring Charges

	Rate	
A. Access Order Charge		(T)
Reference AECA Tariff Section 5.2	$85.69	(R)
B. Service Date Change Charge		
Reference AECA Tariff Section 5.7	$60.00	
C. Design Change Charge		
Reference AECA Tariff Section 5.7	$84.00	
D. Miscellaneous Service Order Charge		
Reference AECA Tariff Section 5.7	$123.00	
E. Transport – Installation Per Entrance Facility		
Reference AECA Tariff Section 6.8		
- Voice Grade Two-Wire	$489.07	
- Voice Grade Four-Wire	$489.07	
- High Capacity DS1	$358.67	
- High Capacity DS3	$483.64	
- Synchronous Optical Channel OC3	$391.26	
- Synchronous Optical Channel OC12	$391.26	
- ESALT 2 Mbps	$579.64	
- ESALT 10 Mbps	$579.64	
F. Transport – Trunk Activation Per Order		
Reference AECA Tariff Section 6.8	$498.85	
G. Interim NXX Translation Per Order		
Reference AECA Tariff Section 6.8	$239.11	
H. Telecommunications Service Priority Charge Per Circuit		
Reference Tariff Section 9.3	$54.63	
I. FGC & FGD Conversion of MF Signaling to SS7 or SS7 to MF Signaling Per 24 Trunks Per Order		
Reference AECA Tariff Section 6.8	$480.38	
J. ESALT Direct Trunked Termination Per ESALT Direct Trunked Termination Installed		
Reference AECA Tariff Section 6.8	$381.88	

RECEIVED
JUL 23 2024
STATE OF ALASKA
REGULATORY COMMISSION OF ALASKA

INTERIOR TELEPHONE COMPANY SPECIFIC ACCESS SERVICES

14. Rates and Charges (Cont'd)

14.2 Switched Access Service (Cont'd)

14.2.2 Recurring Charges **Monthly Rate**

A. Entrance Facility Per Termination

Reference AECA Tariff Section 6.2

- Voice Grade Two-Wire	$66.40	(I)
- Voice Grade Four-Wire	$106.24	|
- High Capacity DS1	$323.68	|
- High Capacity DS3	$2,955.39	|
- Synchronous Optical Channel OC3	$3,013.60	|
- Synchronous Optical Channel OC12	$3,217.57	|
- ESALT 2 Mbps	$573.32	|
- ESALT 10 Mbps	$617.91	(I)

B. Direct Trunked Transport

Reference AECA Tariff Section 6.2

Direct Trunked Facility, Per Mile		
- Voice Grade Two-Wire	$4.73	(I)
- Voice Grade Four-Wire	$4.73	|
- High Capacity DS1	$22.18	|
- High Capacity DS3	$193.18	|
- Synchronous Optical Channel OC3	$206.79	|
- Synchronous Optical Channel OC12	$259.52	(I)
Direct Trunked Facility, Per DTF-E1 Facility		
- ESALT 2 Mbps	$65.31	(I)
- ESALT 10 Mbps	$165.62	(I)
Direct Trunked Termination, Per Termination		
- Voice Grade Two-Wire	$47.53	(I)
- Voice Grade Four-Wire	$47.53	|
- High Capacity DS1	$115.06	|
- High Capacity DS3	$738.82	|
- Synchronous Optical Channel OC3	$769.29	|
- Synchronous Optical Channel OC12	$1,674.98	|
- ESALT 2 Mbps	$152.42	|
- ESALT 10 Mbps	$186.33	(I)

RECEIVED
JUL 23 2024
STATE OF ALASKA
REGULATORY COMMISSION OF ALASKA

INTERIOR TELEPHONE COMPANY SPECIFIC ACCESS SERVICES

14. Rates and Charges (Cont'd)

14.2 Switched Access Service (Cont'd)

14.2.2 Recurring Charges (Cont'd) **Monthly Rate**

C. Multiplexing
Reference AECA Tariff Section 6.2

Multiplexing, Per Arrangement		
- DS3 to DS1	$674.11	(I)
- DS1 to Voice	$260.26	(I)
		(D)
		(D)

D. Tandem Switched Transport (T)
Reference AECA Tariff Section 6.2

Tandem Switched Facility* Per Access Minute Per Mile	$0.000607	(N)
Tandem Switched Termination* Per Access Minute Per Termination	$0.003156	
Tandem Switching* Per Access Minute Per Tandem	$0.007963	
Joint Tandem Switched Transport* Per Originating Toll Free Only Per Access Minute Per Tandem	$0.001000	

*The Joint Tandem Switched Transport rate element applies per tandem to originating toll free minutes only in lieu of the Tandem Switched Facility, Tandem Switched Termination and Tandem Switching rate elements as of July 2, 2021. (N)

(L) Text relocated to Sheet No. 11.2

RECEIVED
AUG 23 2024
STATE OF ALASKA
REGULATORY COMMISSION OF ALASKA

INTERIOR TELEPHONE COMPANY SPECIFIC ACCESS SERVICES

14. Rates and Charges (Cont'd)

14.2 Switched Access Service (Cont'd)

14.2.2 Recurring Charges (Cont'd)

	Monthly Rate	
E. Local Switching Per Minute of Use		(L)
Reference AECA Tariff Section 6.8		(L)
1. Originating – Non Toll Free	N/A	(N)
Originating – Toll Free	$0.000000	(N)
2. Terminating	$0.000000	(N)
F. Information Surcharge Per 100 Minutes		(L)
Reference AECA Tariff Section 6.8		(L)
1. Originating – Non Toll Free	N/A	(N)
Originating – Toll Free	$0.000000	(N)
2. Terminating	$0.000000	(N)
G. Toll Free Data Base Access Service Queries		(T/L)
Reference AECA Tariff Section 6.8		|
1. Basic per Query	$0.000200	|
2. Basic with Vertical Feature per Query	$0.000200	(L)
H. Network Blocking Per Blocked Call		(N)
Reference AECA Tariff Section 6.8		(N)
Applies to FGD only	$0.023170	(N)

(L) Text relocated from Sheet No. 11.1 (N)

RECEIVED
JUL 23 2024
STATE OF ALASKA
REGULATORY COMMISSION OF ALASKA

RECEIVED

NOV 0 4 2008

STATE OF ALASKA
REGULATORY COMMISSION OF ALASKA

INTERIOR TELEPHONE COMPANY SPECIFIC ACCESS SERVICES

14. Rates and Charges (Cont'd)

14.3 Special Access Service

14.3.1a Surcharge For Special Access Service
Reference Tariff Section 7.3

Per Voice Grade Equivalent	$25.00

14.3.1b Telecommunications Service Priority Charge
Reference Tariff Section 9.3

Per Circuit – Monthly Recurring Charge	$1.00
Per Circuit – Non-Recurring Charge	$55.00

14.3.1c Special Access Ordering
Reference Tariff Section 5.2 and 5.8.

A. Access Order Charge per Order $97.00

B. Service Date Change Charge $44.00

A Service Date Change Charge will apply, on a per order per occurrence basis, for each service date changed. The Access Order Charge as specified in 14.3.1c(A) preceding does not apply.

C. Design Change Charge $44.00

The Design Change Charge will apply on a per order per occurrence basis, for each order requiring design change.

D. Miscellaneous Service Order Charge per Occurrence $44.00

RECEIVED
AUG 14 2009

INTERIOR TELEPHONE COMPANY SPECIFIC ACCESS SERVICES

14. Rates and Charges (Cont'd)

14.3 Special Access Service (Cont'd)

14.3.2 Voice Grade Service
Reference Tariff Section 7.4

A. Channel Termination Per Termination

Two-Wire, Monthly Recurring Charge	$ 93.73	(R)
Four-Wire, Monthly Recurring Charge	149.96	(R)
Non-Recurring Charge	325.00	

B. Channel Mileage

1. Channel Mileage Facility

Two-Wire, Monthly Recurring Charge per Mile	n/a
Four-Wire, Monthly Recurring Charge per Mile	n/a

2. Channel Mileage Termination Per Termination

Two-Wire, Monthly Recurring Charge	n/a
Four-Wire Monthly Recurring Charge	n/a

C. Optional Features And Functions

1. Bridging

a. Voice Bridging, Per Port

Two-Wire, Monthly Recurring Charge	ICB
Four-Wire, Monthly Recurring Charge	ICB
Non-Recurring Charge	ICB

b. Data Bridging, Per Port

Two-Wire, Monthly Recurring Charge	ICB
Four-Wire, Monthly Recurring Charge	ICB
Non-Recurring Charge	ICB

RECEIVED

NOV 0 4 2008

STATE OF ALASKA
REGULATORY COMMISSION OF ALASKA

14. Rates and Charges (Cont'd)

14.3 Special Access Service (Cont'd)

14.3.2 Voice Grade Service (Cont'd)
Reference Tariff Section 7.4

C. Optional Features And Functions (Cont'd)

1. Bridging (Cont'd)

c. Telephoto Bridging, Per Port

Two-Wire, Monthly Recurring Charge	ICB
Four-Wire, Monthly Recurring Charge	ICB
Non-Recurring Charge	ICB

d. Dataphone Select-A-Station

Sequential Arrangement,
Ports per Channel Connected

Two-Wire, Monthly Recurring Charge	ICB
Four-Wire, Monthly Recurring Charge	ICB
Non-Recurring Charge	ICB

Addressable Arrangement,
Ports Per Channel Connected

Two-Wire, Monthly Recurring Charge	ICB
Four-Wire, Monthly Recurring Charge	ICB
Non-Recurring Charge	ICB

e. Telemetry And Alarm Bridging

Active Bridging Channel Connections,
Per Channel Connected

Split Band, Monthly Recurring Charge	ICB
Summation, Monthly Recurring Charge	ICB
Non-Recurring Charges	ICB

Passive Bridging Channel Connections,
Per Channel Connected

Monthly Recurring Charge	ICB
Non-Recurring Charges	ICB

RECEIVED
AUG 1 4 2009

INTERIOR TELEPHONE COMPANY SPECIFIC ACCESS SERVICES

14. Rates and Charges (Cont'd)

14.3 Special Access Service (Cont'd)

14.3.2 Voice Grade Service (Cont'd)
Reference Tariff Section 7.4

C. Optional Features And Functions (Cont'd)

2. Conditioning Per Termination

a. C Type		
Monthly Recurring Charge	$15.46	(R)
Non-Recurring Charge	ICB	
b. Improved Attenuation Distortion		
Monthly Recurring Charge	ICB	
Non-Recurring Charge	ICB	
c. Improved Envelope Delay Distortion		
Monthly Recurring Charge	ICB	
Non-Recurring Charge	ICB	
d. Data Capability		
Monthly Recurring Charge	$10.62	(R)
Non-Recurring Charge	ICB	
e. Telephoto Capability		
Monthly Recurring Charge	ICB	
Non-Recurring Charge	ICB	
f. Telephoto Capability (VG11 & VGC)		
Monthly Recurring Charge	ICB	
Non-Recurring Charge	ICB	
g. Sealing Current		
Monthly Recurring Charge	ICB	
Non-Recurring Charge	ICB	

RECEIVED
AUG 14 2009

INTERIOR TELEPHONE COMPANY SPECIFIC ACCESS SERVICES

14. Rates and Charges (Cont'd)

14.3 Special Access Service (Cont'd)

14.3.2 Voice Grade Service (Cont'd)
Reference Tariff Section 7.4

C. Optional Features And Functions (Cont'd)

3. Improved Return Loss For Effective Two-Wire To Four-Wire Transmission Per Termination

Two-Wire, Monthly Recurring Charge	$27.47	(R)
Four-Wire, Monthly Recurring Charge	27.47	(R)
Non-Recurring Charge	ICB	

4. Customer-Specified Receive Level, Per Two-Wire Termination

Monthly Recurring Charge	$18.89	(R)
Non-Recurring Charge	ICB	

5. Multiplexing, Per Arrangement Voice To Telegraph Grade

Monthly Recurring Charge	ICB
Non-Recurring Charge	ICB

6. Signaling Capability

Monthly Recurring Charge		
- Per Termination	$27.81	(R)
- VG1 – Loop Start Either End	n/a	
- VG1 – Ground Start Either End	n/a	
- VG2 – Loop Start Closed End Only	n/a	
- VG2 – Ground Start to Centrex Station Line Only	n/a	
- VG2 – 20HZ Ringdown	n/a	
- VG3, VG7 – Loop Start	n/a	
- VG3, VG7 – Ground Start	n/a	
- VG3, VG7 – E & M	n/a	
- VG8, VG9 – Loop Start at Closed End	n/a	
- VG8, VG9 – E & M, SF, DX at Open End	n/a	
- VG8, VG9 – E & M at Closed End	n/a	
Non-Recurring Charge	n/a	

RECEIVED
AUG 1 4 2009

INTERIOR TELEPHONE COMPANY SPECIFIC ACCESS SERVICES

14. Rates and Charges (Cont'd)

14.3 Special Access Service (Cont'd)

14.3.2 Voice Grade Service (Cont'd)
Reference Tariff Section 7.4

C. Optional Features And Functions (Cont'd)

7. Selective Signaling Arrangement, Per Arrangement

Monthly Recurring Charge	$13.95	(R)
Non-Recurring Charge	ICB	

8. Transfer Arrangement (Key Activated* or Dial Up)**

Per Four Port Arrangement, Including Control Channel Termination (See Note)

Monthly Recurring Charge	ICB
Non-Recurring Charge	ICB

Per Five Port Arrangement, Including Control Channel Termination (See Note)

Monthly Recurring Charge	ICB
Non-Recurring Charge	ICB

9. Public Packet Switching Network (PPSN) Interface Arrangement, Per Arrangement

Monthly Recurring Charge	ICB
Non-Recurring Charge	ICB

* The key activated control channel is rated as a Voice Grade Channel Termination and Channel Mileage, if applicable.

** The Dial-Up option requires the customer to purchase the Controller Arrangement.

Note: An additional Channel Termination Charge will apply whenever a spare channel is configured as a leg to the customer designated premises. Additional channel mileage charges will also apply when the transfer arrangement is not located in the customer designated premises serving wire center.

RECEIVED
AUG 1 4 2009

INTERIOR TELEPHONE COMPANY SPECIFIC ACCESS SERVICES

14. Rates and Charges (Cont'd)

14.3 Special Access Service (Cont'd)

14.3.3 Digital Data Service
Reference Tariff Section 7.7

A. Channel Termination Per Termination

Monthly Recurring Charge		
- 2.4 Kbps	$ 172.98	(R)
- 4.8 Kbps	172.98	(R)
- 9.6 Kbps	172.98	(R)
- 19.2 Kbps	172.98	(R)
- 56.0 Kbps	172.98	(R)
- 64.0 Kbps	172.98	(R)
Non-Recurring Charge	353.00	

B. Channel Mileage

1. Channel Mileage Facility Per Mile

Monthly Recurring Charge	
- 2.4 Kbps	ICB
- 4.8 Kbps	ICB
- 9.6 Kbps	ICB
- 19.2 Kbps	ICB
- 56.0 Kbps	ICB
- 64.0 Kbps	ICB
Non-Recurring Charge	n/a

2. Channel Mileage Termination per Termination

Monthly Recurring Charge	
- 2.4 Kbps	ICB
- 4.8 Kbps	ICB
- 9.6 Kbps	ICB
- 19.2 Kbps	ICB
- 56.0 Kbps	ICB
- 64.0 Kbps	ICB
Non-Recurring Charge	n/a

RECEIVED
AUG 1 4 2009

INTERIOR TELEPHONE COMPANY SPECIFIC ACCESS SERVICES

14. Rates and Charges (Cont'd)

14.3 Special Access Service (Cont'd)

14.3.3 Digital Data Service (Cont'd)

Reference Tariff Section 7

C. Optional Features And Functions

1. Bridging, Per Port

Monthly Recurring Charge	ICB	
Non-Recurring Charge	ICB	

2. Loop Transfer Arrangement (Key Activated* or Dial Up) Per Four Port Arrangement (See Note)**

Monthly Recurring Charge	ICB	
Non-Recurring Charge	ICB	

3. Public Packet Switching Network

a. Interface Arrangement – 9.6 Kbps

Monthly Recurring Charge	ICB	
Non-Recurring Charge	ICB	

b. Interface Arrangement – 56.0 Kbps

Monthly Recurring Charge	ICB	
Non-Recurring Charge	ICB	

D. **Channel Service Unit Per Termination**

Monthly Recurring Charge		
- 2.4 Kbps	$66.69	(R)
- 4.8 Kbps	$66.69	(R)
- 9.6 Kbps	$66.69	(R)
- 56.0 Kbps	$66.69	(R)
Non-Recurring Charge	ICB	

* The key activiated control channel is rated as a Voice Grade Channel Termination and Channel Mileage, if applicable.

** The Dial Up option requires the customer to purchase the Controller Arrangement.

Note: An additional Channel Termination Charge will apply whenever a spare channel is configured as a leg to the customer designated premises. Additional channel mileage charges will also apply when the transfer arrangement is not located in the customer designated premises serving wire center.

RECEIVED
AUG 14 2009

INTERIOR TELEPHONE COMPANY SPECIFIC ACCESS SERVICES

14. Rates and Charges (Cont'd)

14.3 Special Access Service (Cont'd)

14.3.4 High Capacity Service

Reference Tariff Section 7.8

A. Channel Termination Per Termination

Monthly Recurring Charge		
- 1.544 Mbps	$490.50	(R)
- 3.152 Mbps	ICB	
- 6.312 Mbps	ICB	
- 44.736 Mbps	ICB	
- 274.176 Mbps	ICB	
Non-Recurring Charge	378.00	

B. Channel Mileage

1. Facility Per Mile

Monthly Recurring Charge	
- 64.0 Kpbs	n/a
- 1.544 Mbps	n/a
- 3.152 Mbps	n/a
- 6.312 Mbps	n/a
- 44.736 Mbps	n/a
- 274.176 Mbps	n/a
Non-Recurring Charge	n/a

2. Per Termination

Monthly Recurring Charge	
-64.0 Kbps	n/a
- 1.544 Mbps	n/a
- 3.152 Mbps	n/a
- 6.312 Mbps	n/a
- 44.736 Mbps	n/a
- 274.176 Mbps	n/a
Non-Recurring Charge	n/a

RECEIVED
AUG 14 2009

INTERIOR TELEPHONE COMPANY SPECIFIC ACCESS SERVICES

14. Rates and Charges (Cont'd)

14.3 Special Access Service (Cont'd)

14.3.4 High Capacity Service (Cont'd)

Reference Tariff Section 7.8

C. Optional Features and Functions

1. Multiplexing Per Arrangement		
Monthly Recurring Charge		
- DS4 to DS1	n/a	
- DS3 to DS1	n/a	
- DS2 to DS1	n/a	
- DS1C to DS1	n/a	
- DS1 to Voice*	$393.21	(R)
- DS1 to DS0	393.21	(R)
- DS0 to Subrates – Up to 2.4 Kbps Services	837.39	(R)
- DS0 to Subrates – Up to 4.8 Kbps Services	569.02	(R)
- DS0 to Subrates – Up to 9.6 Kbps Services	504.60	(R)
-Non-Recurring Charge	ICB	
2. Automatic Loop Transfer, Per Arrangement		
Monthly Recurring Charge	$339.25	(R)
Non-Recurring Charge	ICB	
3. Transfer Arrangement (Key Activated or Dial Up***) Per Four Port Arrangement, Including Control Channel Termination (See Note)**		
Monthly Recurring Charge	n/a	
Non-Recurring Charge	n/a	
4. High Capacity Synchronization		
Monthly Recurring Charge	n/a	
Non-Recurring Charge	n/a	

* A channel of this DS1 to the Hub can be used for Digital Data Service.

** The key activated control channel is rated as a Voice Grade Channel Termination and Channel Mileage, if applicable.

*** The Dial Up option requires the customer to purchase the Controller Arrangement.

Note: An additional Channel Termination Charge will apply whenever a spare channel is configured as a leg to the customer designated premises. Additional channel mileage charges will also apply when the transfer arrangement is not located in the customer designated premises serving wire center.

RECEIVED
AUG 14 2009

INTERIOR TELEPHONE COMPANY SPECIFIC ACCESS SERVICES

14. Rates and Charges (Cont'd)

14.3 Special Access Service (Cont'd)

14.3.4 High Capacity Service (Cont'd)

Reference Tariff Section 7.8

D. Network Channel Terminating Equipment (NCTE),

1. 1.544 Mbps Per Termination (Note)

Monthly Recurring Charge	$192.40	(R)
Non-Recurring Charge	ICB	

2. Automatic Loop Transfer, Per Termination (Note)

Monthly Recurring Charge	$773.00	(R)
Non-Recurring Charge	ICB	

Note 1: NCTE will only be provided under tariff if they existed in the Telephone Company's inventory as of November 18, 1983.

RECEIVED

NOV 0 4 2008

STATE OF ALASKA
REGULATORY COMMISSION OF ALASKA

INTERIOR TELEPHONE COMPANY SPECIFIC ACCESS SERVICES

14. Rates and Charges (Cont'd)

14.4 Other Services

14.4.1 Public Packet Data Network

A. Frame Relay Access Service
Reference Tariff Section 12

1. Connections – End User Port (Per Port)

Monthly Recurring Charge	
- 56.0 Kbps	**n/a**
- 64.0 Kbps	**n/a**
- 1.544 Mbps	**n/a**
Non-Recurring Charge	**n/a**

2. Access Customer Port (Per Port)

Monthly Recurring Charge	
- 1.544 Mbps	**n/a**
Non-Recurring Charge	**n/a**

3. Permanent Virtual Connections (PVC)

a. Standard – CIR

Monthly Recurring Charge	
- 8 Kbps	n/a
- 16 Kbps	n/a
- 28 Kbps	n/a
- 32 Kbps	n/a
- 56 Kbps	n/a
- 64 Kbps	n/a
- 128 Kbps	n/a
- 192 Kbps	n/a
- 256 Kbps	n/a
- 384 Kbps	n/a
- 512 Kbps	n/a
- 768 Kbps	n/a
Non-Recurring Charge	n/a

RECEIVED
APR 7 2014
STATE OF ALASKA
REGULATORY COMMISSION OF ALASKA

INTERIOR TELEPHONE COMPANY SPECIFIC ACCESS SERVICES

14. Rates and Charges (Cont'd)

14.5 Additional Engineering, Additional Labor And Miscellaneous Service

Reference AECA Tariff Section 9
As applies to:

	Special Access	Switched Access	
	Rate		(T)
14.5.1 Additional Engineering			
A. Basic Time, Normally Scheduled Working Hours, Per Engineer Each Half Hour or Fraction Thereof	$57.99	$31.03	(N)
B. Overtime, Outside of Normally Scheduled Working Hours, Per Engineer Each Half Hour or Fraction Thereof	$86.99	$46.55	(N)
C. Premium Time, Outside of Scheduled Work Day, Per Engineer Each Half Hour or Fraction Thereof	$115.97	$62.06	(N)
14.5.2 Additional Labor			
A. Installation and Repair			
1. Overtime, Outside of Normally Scheduled Working Hours on a Scheduled Work Day, Per Technician Each Half Hour or Fraction Thereof*	$70.16	$47.57	(N)
2. Premium Time, Outside of Normally Scheduled Work Day, Per Technician Each Half Hour or Fraction Thereof*	$93.54	$63.42	(N)

* A call out of a Telephone Company employee at a time not consecutive with the employee's schedules working period is subject to a minimum charge of four hours.

RECEIVED
APR 21 2014
STATE OF ALASKA
REGULATORY COMMISSION OF ALASKA

INTERIOR TELEPHONE COMPANY SPECIFIC ACCESS SERVICES

14. Rates and Charges (Cont'd)

14.5 Additional Engineering, Additional Labor And Miscellaneous Service (Cont'd)
Reference AECA Tariff Section 9
As applies to:

	Special Access	Switched Access	
14.5.2 Additional Labor	**Rate**		(T)
B. Stand-By			
1. Basic Time, Normally Scheduled Working Hours, Per Technician Each Half Hour or Fraction Thereof*	$46.21	$21.18	(N)
2. Overtime, Outside of Normally Scheduled Working Hours on a Scheduled Work Day, Per Technician Each Half Hour or Fraction Thereof*	$70.16	$31.77	(N)
3. Premium Time, Outside of Scheduled Work Day, Per Technician Each Half Hour or Fraction Thereof*	$93.54	$42.36	(N)
C. Testing and Maintenance with Other Telephone Companies, or Other Labor			
1. Installation and Repair			
a. Basic Time, Normally Scheduled Working Hours, Per Technician Each Half Hour or Fraction Thereof*	$46.21	$31.71	(N)
b. Overtime, Outside of Normally Scheduled Working Hours on a Scheduled Work Day, Per Technician Each Half Hour or Fraction Thereof*	$70.16	$47.57	(N)
c. Premium Time, Outside of Scheduled Work Day, Per Technician Each Half Hour or Fraction Thereof*	$93.54	$63.42	(N)

*A call-out of a Telephone Company employee at a time not consecutive with the employee's scheduled working period is subject to a minimum charge of four hours.

RECEIVED
APR 7 2014
STATE OF ALASKA
REGULATORY COMMISSION OF ALASKA

INTERIOR TELEPHONE COMPANY SPECIFIC ACCESS SERVICES

14. Rates and Charges (Cont'd)

14.5 Additional Engineering, Additional Labor And Miscellaneous Service (Cont'd)
Reference AECA Tariff Section 9
As applies to:

	Special Access	Switched Access	
	Rate		(T)
14.5.2 Additional Labor (Cont'd)			
C. Testing And Maintenance with Other Telephone Companies, or Other Labor (Cont'd)			
2. Central Office Maintenance			
a. Basic Time, Normally Scheduled Working Hours, Per Technician Each Half Hour or Fraction Thereof*	$46.21	$34.66	(N)
b. Overtime, Outside of Normally Scheduled Working Hours on a Scheduled Work Day, Per Technician Each Half Hour or Fraction Thereof*	$70.16	$51.99	(N)
c. Premium Time, Outside of Scheduled Work Day, Per Technician Each Half Hour or Fraction Thereof*	$93.54	$69.32	(N)

14.5.3 Miscellaneous Services

A. Additional Cooperative Acceptance Testing – Switched Access

1. Testing Periods Basic Time, Overtime* and Premium Time*
See rates for Additional Labor as set forth in 14.5.2(C).

* A call-out of a Telephone Company employee at a time not consecutive with the employee's scheduled working period is subject to a minimum charge of four hours.

RECEIVED
APR 21 2014
STATE OF ALASKA
REGULATORY COMMISSION OF ALASKA

INTERIOR TELEPHONE COMPANY SPECIFIC ACCESS SERVICES

14. Rates and Charges (Cont'd)

14.5 Additional Engineering, Additional Labor And Miscellaneous Service (Cont'd)
Reference Tariff Section 9

14.5.3 Miscellaneous Services - (Cont'd)

B. Additional Automatic Testing –
Switched Access to First Point of Switching

Additional Tests - Per Test - Per Transmission Path (N)

1.	Gain-Slope Tests	$2.89
2.	C-Notched Noise Tests	$2.89
3.	1004 Hz Loss**	$2.89
4.	C-Message Noise**	$2.89
5.	Balance (ret. loss)**	$2.89

(N)

(D)
(T)

C. Additional Manual Testing –
Switched Access to First Point of Switching

Additional Tests – Per Technician – Each Half Hour or Fraction Thereof

1. Gain-Slope Tests
2. C-Notched Noise Tests
3. Any Other Agreed to Tests

See rates for Additional Labor as set for in 14.5.2(C).

D. Additional Cooperative Acceptance Testing –
Special Access

1. Tesing Periods – Each Half Hour or Fraction Thereof
   Basic Time, Overtime* and Premium Time*

   See rates for Additional Labor as set forth in 14.5.2(C).

* A call-out of a Telephone Company employee at a time not consecutive with the employee's scheduled workir period is subject to a minimum charge of four hours.

** 1004 Hz Loss, C-Message Noise and Balance are non-chargeable routine tests; however, they may be requested on an as needed or more than routine schedule basis, in which case the charges herein apply.

RECEIVED

APR 21 2014

STATE OF ALASKA
REGULATORY COMMISSION OF ALASKA

14. Rates and Charges (Cont'd)

14.5 Additional Engineering, Additional Labor And Miscellaneous Service (Cont'd)
Reference Tariff Section 9

14.5.3 Miscellaneous Services - (Cont'd)

E. Additional Manual Testing – Special Access

1. Testing Periods – Each Half Hour Or Fraction Thereof
   Basic Time, Overtime* and Premium Time*

   See rates for Additional Labor as set forth in 14.5.2(C).

F. Maintenance of Service (T)

1. Maintenance of Service Periods – Each Half Hour or Fraction Thereof
   Basic Time, Overtime* and Premium Time*

   See rates for Additional Labor as set forth in 14.5.2(C).

* A call-out of a Telephone Company employee at a time not consecutive with the employee's scheduled workin period is subject to a minimum charge of four hours.

RECEIVED

NOV 0 4 2008

STATE OF ALASKA
REGULATORY COMMISSION OF ALASKA

MUKLUK TELEPHONE COMPANY, INC.
COMPANY SPECIFIC ACCESS SERVICES
RATES AND CHARGES

Mukluk Telephone Company, Inc.
201 E 56th Ave
Anchorage, AK 99518

Pursuant to:
TU-08-149(1)

Effective: December 20, 2008

Issued: November 3, 2008
Issued By: Mukluk Telephone Company, Inc.
By: Brenda Shepard Title: CEO

RECEIVED
DEC 14 2018
STATE OF ALASKA
REGULATORY COMMISSION OF ALASKA

MUKLUK TELEPHONE COMPANY SPECIFIC ACCESS SERVICES

Index to Rates and Charges

14.1	**Carrier Common Line Access Service**	**MTC-5**	**(T)**
	14.1.2 Recurring Charge		
	14.1.2.a Carrier Common Line	**MTC-9**	
	14.1.2.b Network Access Fee	**MTC-9**	
14.2	**Switched Access Service**		
	14.2.1 Non-Recurring Charges	**MTC-10**	
	14.2.2 Recurring Charges	**MTC-11**	
	14.2.3 Equal Access Recovery Charge	**MTC-12**	
	14.2.4 Presubscription Change Charge	**MTC-12**	
	14.2.5 Assumed Minutes Of Use	**MTC-12**	
14.3	**Special Access Service**		
	14.3.1a Surcharge For Special Access Service	**MTC-13**	
	14.3.1b Telecommunications Service Priority Charge	**MTC-13**	
	14.3.1c Special Access Ordering	**MTC-13**	
	14.3.2 Billing for Special Access Service	**MTC-14**	

RECEIVED

NOV 0 4 2008

STATE OF ALASKA
REGULATORY COMMISSION OF ALASKA

MUKLUK TELEPHONE COMPANY SPECIFIC ACCESS SERVICES

Index to Rates and Charges - (Cont'd)

14.3 Special Access Service - Continued

14.3.2 Voice Grade Service

A. Channel Termination

B. Channel Mileage

1. Channel Mileage Facility	**MTC-14**
2. Channel Mileage Termination	**MTC-14**
C. Optional Features And Functions	**MTC-14**
1. Bridging	**MTC-14**
2. Conditioning Per Termination	**MTC-16**
3. Improved Return Loss For Effective Two-Wire To Four-Wire Transmission	**MTC-17**
4. Customer-Specified Receive Level	**MTC-17**
5. Multiplexing, Per Arrangement Voice Grade To Telegraph Grade	**MTC-17**
6. Signaling Capability	**MTC-17**
7. Selective Signaling Arrangement	**MTC-18**
8. Transfer Arrangement-Key Activated Or Dial Up	**MTC-18**
9. Public Packet Switching Network (PPSN)	**MTC-18**

RECEIVED

NOV 0 4 2008

STATE OF ALASKA
REGULATORY COMMISSION OF ALASKA

MUKLUK TELEPHONE COMPANY SPECIFIC ACCESS SERVICES

Index to Rates and Charges - (Cont'd)

14.3 Special Access Service - Continued

14.3.3 Digital Data Service

A.	Channel Termination, Per Termination	MTC-19
B.	Channel Mileage	
	1. Channel Mileage Facility, Per Mile	MTC-19
	2 Channel Mileage Termination,Per Termination	MTC-19
C.	Optional Features And Functions	
	1. Bridging, Per Port	MTC-20
	2. Loop Transfer Arrangement	MTC-20
	3. Public Packet Switching Network Interface Arrangement	MTC-20
D.	Channel Service Unit Per Termination	MTC-20

14.3.4 High Capacity Service

A.	Channel Termination Per Termination	MTC-21
B.	Channel Mileage	MTC-21
C.	Optional Features And Functions	
	1. Multiplexing -	MTC-22
	2. Automatic Loop Transfer	MTC-22
	3. Transfer Arrangement	MTC-22
D.	Network Channel Terminating Equipment (NCTE)	MTC-23

14.4 Other Services

14.4.1 Public Packet Data Network MTC-24

Pursuant to:
U-08-149(1)

Effective: December 20, 2008

Issued: November 3, 2008
Issued By: Mukluk Telephone Company, Inc.
By: Brenda Shepard Title: CEO

RECEIVED

NOV 0 4 2008

STATE OF ALASKA
REGULATORY COMMISSION OF ALASKA

MUKLUK TELEPHONE COMPANY SPECIFIC ACCESS SERVICES

Index to Rates and Charges - (Cont'd)

14.5 Additional Engineering, Additional Labor And Miscellaneous Service

14.5.1 Additional Engineering **MTC-25**

14.5.2 Additional Labor

A. Installation And Repair **MTC-25**

B. Standby **MTC-26**

C. Testing And Maintenance With Other Telephone Companies Or Other Labor **MTC-27**

14.5.3 Miscellaneous Services

A. Additional Cooperative Acceptance Testing-Switched Access **MTC-28**

B. Additional Automatic Testing – Switched Access to First Point of Switching **MTC-28**

C. Additional Manual Testing – Switched Access to First Point of Switching **MTC-28**

D. Additional Cooperative Acceptance Testing-Special Access **MTC-28**

E. Additional Manual Testing - Special Access **MTC-29**

F. Maintenance Of Service **MTC-29**

RECEIVED
DEC 14 2018
STATE OF ALASKA
REGULATORY COMMISSION OF ALASKA

14. Rates and Charges

14.1 Carrier Common Line Access Service (T)

A. General Description

Carrier Common Line Access provides for the use of MTC's common lines by interexchange carriers (IXC) for access to MTC's end users to furnish intrastate service.

Carrier Common Line Access is provided where MTC's end users subscribe to local exchange telephone service.

RECEIVED
DEC 14 2018
STATE OF ALASKA
REGULATORY COMMISSION OF ALASKA

14. Rates and Charges

14.1 Carrier Common Line Access Service (Cont'd) (T)

B. Limitations

1. A telephone number is not provided with Carrier Common Line Access.
2. Detail billing is not provided for Carrier Common Line Access.
3. Directory listings are not included in the rates and charges for Carrier Common Line Access.
4. Intercept arrangements are not included in the rates and charges for Carrier Common Line Access.

C. Undertaking of MTC

MTC will provide the use of MTC's common lines by an IXC for access to end users. The procedure for recovering the Carrier Common Line revenue requirement are set forth in these rules and regulations.

D. Obligations of the Customer

1. Any switched access service associated with Carrier Common Line Access shall be ordered under other sections of this tariff.
2. The IXC facilities at the premises of the ordering IXC shall provide the necessary on-hook and off-hook supervision.

RECEIVED
DEC 14 2018
STATE OF ALASKA
REGULATORY COMMISSION OF ALASKA

MUKLUK TELEPHONE COMPANY SPECIFIC ACCESS SERVICES

14. Rates and Charges

14.1 Carrier Common Line Access Service (Cont'd) (T)

E. Rate Regulation

A. The Carrier Common Line Access Charge will be billed as Essential Network Support to the Alaska Universal Service Administrataive Company (AUSAC) under this tariff in accordance with the regulations set forth below.

B. Annual Essential Network Support is an amount equal to (i) the amount of carrier common line support received for the year ended December 31, 2016, plus (ii) the amount of carrier of last resort support received for the year ended December 31, 2016. The ENS amount is frozen at that level. The monthly rate will be determined by dividing the annual ENS by twelve. **(D)(N)**

C. The Company will continue to use the frozen Essential Network Support amount, to be recovered from AUSAC pursuant to this tariff, in calculating the monthly ENS payable under this tariff until it is superseded by a subsequent order of the RCA. **(D)(N)**

RECEIVED
JUN 14 2011
STATE OF ALASKA
REGULATORY COMMISSION OF ALASKA

MUKLUK TELEPHONE COMPANY SPECIFIC ACCESS SERVICES

14. Rates and Charges

(D)

(D)

RECEIVED
DEC 14 2018
STATE OF ALASKA
REGULATORY COMMISSION OF ALASKA

MUKLUK TELEPHONE COMPANY SPECIFIC ACCESS SERVICES

14. Rates and Charges

14.1 Carrier Common Line Access Service (Cont'd) (T)

14.1.1 Carrier Common Line Access Service

Regulations concerning Carrier Common Line Access are set forth in 14.1 preceding.

(D)

14.1.2.a Recurring Charge - Carrier Common Line

This charge is billed to AUSAC as described in 14.1 preceding. (N)
(D)

(D)

	Monthly Rate	
		(D)
Essential Network Support	$29,010	(N)
		(D)

(D)

14.1.2.b Recurring Charge – Network Access Fee (NAF)

This charge is applied to the end user for intrastate access as described in Section 4.1.

Network Access Fee	$5.75/month

RECEIVED
JUL 23 2024
STATE OF ALASKA
REGULATORY COMMISSION OF ALASKA

MUKLUK TELEPHONE COMPANY SPECIFIC ACCESS SERVICES

14. Rates and Charges (Cont'd)

14.2 Switched Access Service

14.2.1 Non-Recurring Charges

	Rate	
A. Access Order		
Reference AECA Tariff Section 5.2	$85.69	(R)
B. Service Date Change Charge		
Reference AECA Tariff Section 5.7	$60.00	
C. Design Change Charge		
Reference AECA Tariff Section 5.7	$84.00	
D. Miscellaneous Service Order Charge		
Reference AECA Tariff Section 5.7	$123.00	
E. Transport – Installation Per Entrance Facility		
Reference AECA Tariff Section 6.8		
- Voice Grade Two-Wire	$489.07	
- Voice Grade Four-Wire	$489.07	
- High Capacity DS1	$358.67	
- High Capacity DS3	$483.64	
- Synchronous Optical Channel OC3	$391.26	
- Synchronous Optical Channel OC12	$391.26	
- ESALT 2 Mbps	$579.64	
- ESALT 10 Mbps	$579.64	
F. Transport – Trunk Activation Per Order		
Reference AECA Tariff Section 6.8	$498.85	
G. Interim NXX Translation Per Order		
Reference AECA Tariff Section 6.8	$239.11	
H. Telecommunications Service Priority Charge Per Circuit		
Reference AECA Tariff Section 9.3	$54.63	
I. FGC & FGD Conversion of MF Signaling to SS7 or SS7 to MF Signaling Per 24 Trunks Per Order		
Reference AECA Tariff Section 6.8	$480.38	
J. ESALT Direct Trunked Termination Per ESALT Direct Trunked Termination Installed		
Reference AECA Tariff Section 6.8	$381.88	

RECEIVED
JUL 23 2024
STATE OF ALASKA
REGULATORY COMMISSION OF ALASKA

MUKLUK TELEPHONE COMPANY SPECIFIC ACCESS SERVICES

14. Rates and Charges (Cont'd)

14.2 Switched Access Service (Cont'd)

14.2.2 Recurring Charges

	Monthly Rate	
A. Entrance Facility Per Termination		
Reference Tariff Section 6.2		
- Voice Grade Two-Wire	$129.09	(I)
- Voice Grade Four-Wire	$206.58	|
- High Capacity DS1	$629.28	|
- High Capacity DS3	$5,745.83	|
- Synchronous Optical Channel OC3	$5,859.17	|
- Synchronous Optical Channel OC12	$6,255.65	|
- ESALT 2 Mbps	$1,114.61	|
- ESALT 10 Mbps	$1,201.39	(I)
B. Direct Trunked Transport		
Reference Tariff Section 6.2		
Direct Trunked Facility, Per Mile		
- Voice Grade Two-Wire	$9.16	(I)
- Voice Grade Four-Wire	$9.16	|
- High Capacity DS1	$43.03	|
- High Capacity DS3	$375.49	|
- Synchronous Optical Channel OC3	$401.97	|
- Synchronous Optical Channel OC12	$504.54	(I)
Direct Trunked Facility, Per DTF-E1		
- ESALT 2 Mbps	$127.02	(I)
- ESALT 10 Mbps	$321.95	(I)
Direct Trunked Termination, Per Termination		
- Voice Grade Two-Wire	$92.35	(I)
- Voice Grade Four-Wire	$92.35	|
- High Capacity DS1	$223.68	|
- High Capacity DS3	$1,495.67	|
- Synchronous Optical Channel OC3	$3,256.45	(I)
- Synchronous Optical Channel OC12	$296.44	(R)
- ESALT 2 Mbps	$362.23	(I)
- ESALT 10 Mbps	$442.72	(I)

RECEIVED
JUL 23 2024
STATE OF ALASKA
REGULATORY COMMISSION OF ALASKA

MUKLUK TELEPHONE COMPANY SPECIFIC ACCESS SERVICES

14. Rates and Charges (Cont'd)

14.2 Switched Access Service (Cont'd)

14.2.2 Recurring Charges (Cont'd) **Monthly Rate**

C. Multiplexing
Reference AECA Tariff Section 6.2

Multiplexing, Per Arrangement		
- DS3 to DS1	$1,310.63	(I)
- DS1 to Voice	$506.02	(I)
		(D)
		(D)

D. Tandem Switched Transport (T)
Reference AECA Tariff Section 6.2

Tandem Switched Facility*		(N)
Per Access Minute Per Mile	$0.001845	
Tandem Switched Termination*		
Per Access Minute Per Termination	$0.009590	
Tandem Switching*		
Per Access Minute Per Tandem	$0.024192	
Joint Tandem Switched Transport*		
Per Originating Toll Free Only		
Per Access Minute Per Tandem	$0.001000	

*The Joint Tandem Switched Transport rate element applies per tandem to originating toll free minutes only in lieu of the Tandem Switched Facility, Tandem Switched Termination and Tandem Switching rate elements as of July 2, 2021.
(L) Text relocated to Sheet No. 11.2 (N)

RECEIVED
AUG 23 2024
STATE OF ALASKA
REGULATORY COMMISSION OF ALASKA

14. Rates and Charges (Cont'd)

14.2 Switched Access Service (Cont'd)

14.2.2 Recurring Charges (Cont'd)

	Monthly Rate	
E. Local Switching Per Minute of Use		(L)
Reference AECA Tariff Section 6.8		(L)
1. Originating – Non Toll Free	$0.014100	(L)
Originating – Toll Free	$0.000000	(L)
2. Terminating	$0.000000	(L)
F. Information Surcharge Per 100 Minutes		(L)
Reference AECA Tariff Section 6.8		(L)
1. Originating – Non Toll-Free	N/A	(N)
Originating – Toll Free	$0.000000	(N)
2. Terminating	$0.000000	(N)
G. Toll Free Data Base Access Service Queries		(T/L)
Reference AECA Tariff Section 6.8		|
1. Basic per Query	$0.000200	|
2. Basic with Vertical Feature per Query	$0.000200	(L)
H. Network Blocking Per Blocked Call		(N)
Reference AECA Tariff Section 6.8		(N)
Applies to FGD only	$0.070394	(N)

(L) Text relocated from Sheet No. 11.1 (N)

RECEIVED
APR 7 2014
STATE OF ALASKA
REGULATORY COMMISSION OF ALASKA

14. Rates and Charges (Cont'd)

14.2 Switched Access Service (Cont'd)

14.2.3 Equal Access Recovery Charge **Rate** (T)
Reference Tariff Section 6.8

Per Presubscribed Equal Access Line	n/a	

14.2.4 Presubscription Change Charge
Reference Tariff Section 9.3

Per Telephone Exchange Service Line or Trunk		
- Submitted using manual methods.	$5.50	(N)
- Submitted using electronic methods.	$1.25	
- Submitted using manual methods when both the interLATA PIC and intraLATA PIC selections are changed simultaeously.	$2.75	
- Submitted using electronic methods when both the interLATA PIC and intraLATA PIC selections are changed simultaeously.	$0.63	(N)

14.2.5 Assumed Minutes Of Use
Reference Tariff Section 6.8

		Assumed Minutes Per Month
A.	Feature Group A, Two Way Calling (1510 Originating, 2685 Terminating)	4,195
B.	Feature Group A, Originating Only	1,510
C.	Feature Group A, Terminating Only	2,685
D.	Feature Group B, Two Way Calling (3132 Originating, Terminating)	8,700
E.	Feature Group B, Originating Only	3,132
F.	Feature Group B, Terminating Only	5,568

RECEIVED

NOV 0 4 2008

STATE OF ALASKA
REGULATORY COMMISSION OF ALASKA

MUKLUK TELEPHONE COMPANY SPECIFIC ACCESS SERVICES

14. Rates and Charges (Cont'd)

14.3 Special Access Service

14.3.1a Surcharge For Special Access Service
Reference Tariff Section 7.3

Per Voice Grade Equivalent	$25.00

14.3.1b Telecommunications Service Priority Charge
Reference Tariff Section 9.3

Per Circuit – Monthly Recurring Charge	$1.00
Per Circuit – Non-Recurring Charge	$55.00

14.3.1c Special Access Ordering
Reference Tariff Section 5.2 and 5.8.

A. Access Order Charge per Order $97.00

B. Service Date Change Charge $44.00

A Service Date Change Charge will apply, on a per order per occurrence basis, for each service date changed. The Access Order Charge as specified in 14.3.1c(A) preceding does not apply.

C. Design Change Charge $44.00

The Design Change Charge will apply on a per order per occurrence basis, for each order requiring design change.

D. Miscellaneous Service Order Charge per Occurrence $44.00

Pursuant to:
U-08-149(1)

Effective: December 20, 2008

Issued: November 3, 2008
Issued By: Mukluk Telephone Company, Inc.
By: Brenda Shepard Title: CEO

RECEIVED
AUG 1 4 2009

MUKLUK TELEPHONE COMPANY SPECIFIC ACCESS SERVICES

14. Rates and Charges (Cont'd)

14.3 Special Access Service (Cont'd)

14.3.2 Voice Grade Service
Reference Tariff Section 7.4

A. Channel Termination Per Termination

Two-Wire, Monthly Recurring Charge	$ 71.54	(R)
Four-Wire, Monthly Recurring Charge	114.46	(R)
Non-Recurring Charge	325.00	

B. Channel Mileage

1. Channel Mileage Facility

Two-Wire, Monthly Recurring Charge per Mile	n/a
Four-Wire, Monthly Recurring Charge per Mile	n/a

2. Channel Mileage Termination Per Termination

Two-Wire, Monthly Recurring Charge	n/a
Four-Wire Monthly Recurring Charge	n/a

C. Optional Features And Functions

1. Bridging

a. Voice Bridging, Per Port

Two-Wire, Monthly Recurring Charge	ICB
Four-Wire, Monthly Recurring Charge	ICB
Non-Recurring Charge	ICB

b. Data Bridging, Per Port

Two-Wire, Monthly Recurring Charge	ICB
Four-Wire, Monthly Recurring Charge	ICB
Non-Recurring Charge	ICB

RECEIVED
NOV 0 4 2008
STATE OF ALASKA
REGULATORY COMMISSION OF ALASKA

MUKLUK TELEPHONE COMPANY SPECIFIC ACCESS SERVICES

14. Rates and Charges (Cont'd)

14.3 Special Access Service (Cont'd)

14.3.2 Voice Grade Service (Cont'd)
Reference Tariff Section 7.4

C. Optional Features And Functions (Cont'd)

1. Bridging (Cont'd)

c. Telephoto Bridging, Per Port

Two-Wire, Monthly Recurring Charge	ICB
Four-Wire, Monthly Recurring Charge	ICB
Non-Recurring Charge	ICB

d. Dataphone Select-A-Station

Sequential Arrangement, Ports per Channel Connected

Two-Wire, Monthly Recurring Charge	ICB
Four-Wire, Monthly Recurring Charge	ICB
Non-Recurring Charge	ICB

Addressable Arrangement, Ports Per Channel Connected

Two-Wire, Monthly Recurring Charge	ICB
Four-Wire, Monthly Recurring Charge	ICB
Non-Recurring Charge	ICB

e. Telemetry And Alarm Bridging

Active Bridging Channel Connections, Per Channel Connected

Split Band, Monthly Recurring Charge	ICB
Summation, Monthly Recurring Charge	ICB
Non-Recurring Charges	ICB

Passive Bridging Channel Connections, Per Channel Connected

Monthly Recurring Charge	ICB
Non-Recurring Charges	ICB

RECEIVED
AUG 3 4 2009

MUKLUK TELEPHONE COMPANY SPECIFIC ACCESS SERVICES

14. Rates and Charges (Cont'd)

14.3 Special Access Service (Cont'd)

14.3.2 Voice Grade Service (Cont'd)
Reference Tariff Section 7.4

C. Optional Features And Functions (Cont'd)

2. Conditioning Per Termination

a. C Type		
Monthly Recurring Charge	$11.81	(R)
Non-Recurring Charge	ICB	
b. Improved Attenuation Distortion		
Monthly Recurring Charge	ICB	
Non-Recurring Charge	ICB	
c. Improved Envelope Delay Distortion		
Monthly Recurring Charge	ICB	
Non-Recurring Charge	ICB	
d. Data Capability		
Monthly Recurring Charge	$8.10	(I)
Non-Recurring Charge	ICB	
e. Telephoto Capability		
Monthly Recurring Charge	ICB	
Non-Recurring Charge	ICB	
f. Telephoto Capability (VG11 & VGC)		
Monthly Recurring Charge	ICB	
Non-Recurring Charge	ICB	
g. Sealing Current		
Monthly Recurring Charge	ICB	
Non-Recurring Charge	ICB	

RECEIVED
AUG 14 2009

MUKLUK TELEPHONE COMPANY SPECIFIC ACCESS SERVICES

14. Rates and Charges (Cont'd)

14.3 Special Access Service (Cont'd)

14.3.2 Voice Grade Service (Cont'd)
Reference Tariff Section 7.4

C. Optional Features And Functions (Cont'd)

3. Improved Return Loss For Effective Two-Wire To Four-Wire Transmission Per Termination

Two-Wire, Monthly Recurring Charge	$20.96	(R)
Four-Wire, Monthly Recurring Charge	20.96	(R)
Non-Recurring Charge	ICB	

4. Customer-Specified Receive Level, Per Two-Wire Termination

Monthly Recurring Charge	$14.41	(R)
Non-Recurring Charge	ICB	

5. Multiplexing, Per Arrangement Voice To Telegraph Grade

Monthly Recurring Charge	ICB
Non-Recurring Charge	ICB

6. Signaling Capability

Monthly Recurring Charge		
- Per Termination	$21.24	(R)
- VG1 – Loop Start Either End	n/a	
- VG1 – Ground Start Either End	n/a	
- VG2 – Loop Start Closed End Only	n/a	
- VG2 – Ground Start to Centrex Station Line Only	n/a	
- VG2 – 20HZ Ringdown	n/a	
- VG3, VG7 – Loop Start	n/a	
- VG3, VG7 – Ground Start	n/a	
- VG3, VG7 – E & M	n/a	
- VG8, VG9 – Loop Start at Closed End	n/a	
- VG8, VG9 – E & M, SF, DX at Open End	n/a	
- VG8, VG9 – E & M at Closed End	n/a	
Non-Recurring Charge	n/a	

RECEIVED
AUG 14 2009

MUKLUK TELEPHONE COMPANY SPECIFIC ACCESS SERVICES

14. Rates and Charges (Cont'd)

14.3 Special Access Service (Cont'd)

14.3.2 Voice Grade Service (Cont'd)
Reference Tariff Section 7.4

C. Optional Features And Functions (Cont'd)

7. Selective Signaling Arrangement, Per Arrangement

Monthly Recurring Charge	$10.65	(R)
Non-Recurring Charge	ICB	

8. Transfer Arrangement (Key Activated* or Dial Up)**

Per Four Port Arrangement, Including Control Channel Termination (See Note)

Monthly Recurring Charge	ICB
Non-Recurring Charge	ICB

Per Five Port Arrangement, Including Control Channel Termination (See Note)

Monthly Recurring Charge	ICB
Non-Recurring Charge	ICB

9. Public Packet Switching Network (PPSN) Interface Arrangement, Per Arrangement

Monthly Recurring Charge	ICB
Non-Recurring Charge	ICB

* The key activated control channel is rated as a Voice Grade Channel Termination and Channel Mileage, if applicable.

** The Dial-Up option requires the customer to purchase the Controller Arrangement.

Note: An additional Channel Termination Charge will apply whenever a spare channel is configured as a leg to the customer designated premises. Additional channel mileage charges will also apply when the transfer arrangement is not located in the customer designated premises serving wire center.

AUG 1 4 2009

MUKLUK TELEPHONE COMPANY SPECIFIC ACCESS SERVICES

14. Rates and Charges (Cont'd)

14.3 Special Access Service (Cont'd)

14.3.3 Digital Data Service
Reference Tariff Section 7.7

A. Channel Termination Per Termination

Monthly Recurring Charge		
- 2.4 Kbps	$ 132.03	(R)
- 4.8 Kbps	132.03	(R)
- 9.6 Kbps	132.03	(R)
- 19.2 Kbps	132.03	(R)
- 56.0 Kbps	132.03	(R)
- 64.0 Kbps	132.03	(R)
Non-Recurring Charge	353.00	

B. Channel Mileage

1. Channel Mileage Facility Per Mile

Monthly Recurring Charge	
- 2.4 Kbps	ICB
- 4.8 Kbps	ICB
- 9.6 Kbps	ICB
- 19.2 Kbps	ICB
- 56.0 Kbps	ICB
- 64.0 Kbps	ICB
Non-Recurring Charge	n/a

2. Channel Mileage Termination per Termination

Monthly Recurring Charge	
- 2.4 Kbps	ICB
- 4.8 Kbps	ICB
- 9.6 Kbps	ICB
- 19.2 Kbps	ICB
- 56.0 Kbps	ICB
- 64.0 Kbps	ICB
Non-Recurring Charge	n/a

MUKLUK TELEPHONE COMPANY SPECIFIC ACCESS SERVICES

14. Rates and Charges (Cont'd)

14.3 Special Access Service (Cont'd)

14.3.3 Digital Data Service (Cont'd)

Reference Tariff Section 7

C. Optional Features And Functions

1. Bridging, Per Port

Monthly Recurring Charge	ICB	
Non-Recurring Charge	ICB	

2. Loop Transfer Arrangement (Key Activated* or Dial Up) Per Four Port Arrangement (See Note)**

Monthly Recurring Charge	ICB	
Non-Recurring Charge	ICB	

3. Public Packet Switching Network

a. Interface Arrangement – 9.6 Kbps

Monthly Recurring Charge	ICB	
Non-Recurring Charge	ICB	

b. Interface Arrangement – 56.0 Kbps

Monthly Recurring Charge	ICB	
Non-Recurring Charge	ICB	

D. Channel Service Unit Per Termination

Monthly Recurring Charge		
- 2.4 Kbps	$50.91	(R)
- 4.8 Kbps	50.91	(R)
- 9.6 Kbps	50.91	(R)
- 56.0 Kbps	50.91	(R)
Non-Recurring Charge	ICB	

* The key activiated control channel is rated as a Voice Grade Channel Termination and Channel Mileage, if applicable.

** The Dial Up option requires the customer to purchase the Controller Arrangement.

Note: An additional Channel Termination Charge will apply whenever a spare channel is configured as a leg to the customer designated premises. Additional channel mileage charges will also apply when the transfer arrangement is not located in the customer designated premises serving wire center.

AUG 1 4 2009

MUKLUK TELEPHONE COMPANY SPECIFIC ACCESS SERVICES

14. Rates and Charges (Cont'd)

14.3 Special Access Service (Cont'd)

14.3.4High Capacity Service
Reference Tariff Section 7.8

A. Channel Termination Per Termination

Monthly Recurring Charge		
- 1.544 Mbps	$374.38	(R)
- 3.152 Mbps	ICB	
- 6.312 Mbps	ICB	
- 44.736 Mbps	ICB	
- 274.176 Mbps	ICB	
Non-Recurring Charge	378.00	

B. Channel Mileage

1. Facility Per Mile

Monthly Recurring Charge	
- 64.0 Kpbs	n/a
- 1.544 Mbps	n/a
- 3.152 Mbps	n/a
- 6.312 Mbps	n/a
- 44.736 Mbps	n/a
- 274.176 Mbps	n/a
Non-Recurring Charge	n/a

2. Per Termination

Monthly Recurring Charge	
-64.0 Kbps	n/a
- 1.544 Mbps	n/a
- 3.152 Mbps	n/a
- 6.312 Mbps	n/a
- 44.736 Mbps	n/a
- 274.176 Mbps	n/a
Non-Recurring Charge	n/a

RECEIVED
AUG 14 2009

MUKLUK TELEPHONE COMPANY SPECIFIC ACCESS SERVICES

14. Rates and Charges (Cont'd)

14.3 Special Access Service (Cont'd)

14.3.4 High Capacity Service (Cont'd)

Reference Tariff Section 7.8

C. Optional Features and Functions

1. Multiplexing Per Arrangement		
Monthly Recurring Charge		
- DS4 to DS1	n/a	
- DS3 to DS1	n/a	
- DS2 to DS1	n/a	
- DS1C to DS1	n/a	
- DS1 to Voice*	$300.13	(R)
- DS1 to DS0	300.13	(R)
- DS0 to Subrates – Up to 20 2.4 Kbps Services	639.19	(R)
- DS0 to Subrates – Up to 10 4.8 Kbps Services	434.31	(R)
- DS0 to Subrates – Up to 5 9.6 Kbps Services	385.14	(R)
-Non-Recurring Charge	ICB	
2. Automatic Loop Transfer, Per Arrangement		
Monthly Recurring Charge	$258.95	(R)
Non-Recurring Charge	ICB	
3. Transfer Arrangement (Key Activated or Dial Up***) Per Four Port Arrangement, Including Control Channel Termination (See Note)**		
Monthly Recurring Charge	n/a	
Non-Recurring Charge	n/a	
4. High Capacity Synchronization		
Monthly Recurring Charge	n/a	
Non-Recurring Charge	n/a	

* A channel of this DS1 to the Hub can be used for Digital Data Service.

** The key activated control channel is rated as a Voice Grade Channel Termination and Channel Mileage, if applicable.

*** The Dial Up option requires the customer to purchase the Controller Arrangement.

Note: An additional Channel Termination Charge will apply whenever a spare channel is configured as a leg to the customer designated premises. Additional channel mileage charges will also apply when the transfer arrangement is not located in the customer designated premises serving wire center.

RECEIVED
AUG 1 4 2009

MUKLUK TELEPHONE COMPANY SPECIFIC ACCESS SERVICES

14. Rates and Charges (Cont'd)

14.3 Special Access Service (Cont'd)

14.3.4 High Capacity Service (Cont'd)

Reference Tariff Section 7.8

D. Network Channel Terminating Equipment (NCTE),

1. 1.544 Mbps Per Termination (Note)

Monthly Recurring Charge	$146.86	(R)
Non-Recurring Charge	ICB	

2. Automatic Loop Transfer, Per Termination (Note)

Monthly Recurring Charge	$590.02	(R)
Non-Recurring Charge	ICB	

Note 1: NCTE will only be provided under tariff if they existed in the Telephone Company's inventory as of November 18, 1983.

RECEIVED

NOV 0 4 2008

STATE OF ALASKA
REGULATORY COMMISSION OF ALASKA

14. Rates and Charges (Cont'd)

14.4 Other Services

14.4.1 Public Packet Data Network

A. Frame Relay Access Service
Reference Tariff Section 12

1. Connections – End User Port (Per Port)

Monthly Recurring Charge	
- 56.0 Kbps	**n/a**
- 64.0 Kbps	**n/a**
- 1.544 Mbps	**n/a**
Non-Recurring Charge	**n/a**

2. Access Customer Port (Per Port)

Monthly Recurring Charge	
- 1.544 Mbps	**n/a**
Non-Recurring Charge	**n/a**

3. Permanent Virtual Connections (PVC)

a. Standard – CIR

Monthly Recurring Charge	
- 8 Kbps	n/a
- 16 Kbps	n/a
- 28 Kbps	n/a
- 32 Kbps	n/a
- 56 Kbps	n/a
- 64 Kbps	n/a
- 128 Kbps	n/a
- 192 Kbps	n/a
- 256 Kbps	n/a
- 384 Kbps	n/a
- 512 Kbps	n/a
- 768 Kbps	n/a
Non-Recurring Charge	n/a

RECEIVED
APR 7 2014
STATE OF ALASKA
REGULATORY COMMISSION OF ALASKA

MUKLUK TELEPHONE COMPANY SPECIFIC ACCESS SERVICES

14. Rates and Charges (Cont'd)

14.5 Additional Engineering, Additional Labor And Miscellaneous Service

Reference Tariff Section 9
As Applies to:

	Special Access	Switched Access	
	Rate		(T)
14.5.1 Additional Engineering			
A. Basic Time, Normally Scheduled Working Hours, Per Engineer Each Half Hour or Fraction Thereof	$49.17	31.03	(N)
B. Overtime, Outside of Normally Scheduled Working Hours, Per Engineer Each Half Hour or Fraction Thereof	$73.77	46.55	(N)
C. Premium Time, Outside of Scheduled Work Day, Per Engineer Each Half Hour or Fraction Thereof	$98.34	62.06	(N)
14.5.2 Additional Labor			
A. Installation and Repair			
1. Overtime, Outside of Normally Scheduled Working Hours on a Scheduled Work Day, Per Technician Each Half Hour or Fraction Thereof*	$59.50	47.57	(N)
2. Premium Time, Outside of Normally Scheduled Work Day, Per Technician Each Half Hour or Fraction Thereof*	$79.32	63.42	(N)

*A call out of a Telephone Company employee at a time not consecutive with the employee's schedules working period is subject to a minimum charge of four hours.

RECEIVED
APR 7 2014
STATE OF ALASKA
REGULATORY COMMISSION OF ALASKA

MUKLUK TELEPHONE COMPANY SPECIFIC ACCESS SERVICES

14. Rates and Charges (Cont'd)

14.5 Additional Engineering, Additional Labor And Miscellaneous Service (Cont'd)
Reference Tariff Section 9
As Applies to:

	Special Access	Switched Access	
14.5.2 Additional Labor (cont'd)	**Rate**		(T)
B. Stand-By			
1. Basic Time, Normally Scheduled Working Hours, Per Technician Each Half Hour or Fraction Thereof*	$39.19	$21.18	(N)
2. Overtime, Outside of Normally Scheduled Working Hours on a Scheduled Work Day, Per Technician Each Half Hour or Fraction Thereof*	$59.50	$31.77	(N)
3. Premium Time, Outside of Scheduled Work Day, Per Technician Each Half Hour or Fraction Thereof*	$79.32	$42.36	(N)
C. Testing and Maintenance with Other Telephone Companies, or Other Labor			
1. Installation and Repair			
a. Basic Time, Normally Scheduled Working Hours, Per Technician Each Half Hour or Fraction Thereof*	$39.19	$31.71	(N)
b. Overtime, Outside of Normally Scheduled Working Hours on a Scheduled Work Day, Per Technician Each Half Hour or Fraction Thereof*	$59.50	47.57	(N)
c. Premium Time, Outside of Scheduled Work Day, Per Technician Each Half Hour or Fraction Thereof*	$79.32	63.42	(N)

*A call-out of a Telephone Company employee at a time not consecutive with the employee's scheduled working period is subject to a minimum charge of four hours.

RECEIVED
APR 7 2014
STATE OF ALASKA
REGULATORY COMMISSION OF ALASKA

MUKLUK TELEPHONE COMPANY SPECIFIC ACCESS SERVICES

14. Rates and Charges (Cont'd)

14.5 Additional Engineering, Additional Labor And Miscellaneous Service (Cont'd)
Reference Tariff Section 9
As Applies to:

	Special Access	Switched Access	
	Rate		(T)
14.5.2 Additional Labor (Cont'd)			
C. Testing And Maintenance with Other Telephone Companies, or Other Labor (Cont'd)			
2. Central Office Maintenance			
a. Basic Time, Normally Scheduled Working Hours, Per Technician Each Half Hour or Fraction Thereof*	$39.19	$34.66	(N)
b. Overtime, Outside of Normally Scheduled Working Hours on a Scheduled Work Day, Per Technician Each Half Hour or Fraction Thereof*	$59.90	$51.99	(N)
c. Premium Time, Outside of Scheduled Work Day, Per Technician Each Half Hour or Fraction Thereof*	$79.32	$69.32	(N)

14.5.3 Miscellaneous Services

A. Additional Cooperative Acceptance Testing – Switched Access

1. Testing Periods Basic Time, Overtime* and Premium Time*
See rates for Additional Labor as set forth in 14.5.2(C).

*A call-out of a Telephone Company employee at a time not consecutive with the employee's scheduled working period is subject to a minimum charge of four hours.

RECEIVED
APR 21 2014
STATE OF ALASKA
REGULATORY COMMISSION OF ALASKA

MUKLUK TELEPHONE COMPANY SPECIFIC ACCESS SERVICES

14. Rates and Charges (Cont'd)

14.5 Additional Engineering, Additional Labor And Miscellaneous Service (Cont'd)
Reference Tariff Section 9

14.5.3 Miscellaneous Services - (Cont'd)

B. Additional Automatic Testing –
Switched Access to First Point of Switching

Additional Tests - Per Test - Per Transmission Path		(T)
1. Gain-Slope Tests	$2.89	(N)
2. C-Notched Noise Tests	$2.89	|
3. 1004 Hz Loss**	$2.89	|
4. C-Message Noise**	$2.89	|
5. Balance (ret. loss)**	$2.89	(N)

C. Additional Manual Testing – (T)
Switched Access to First Point of Switching
Additional Tests – Per Technician – Each Half Hour or Fraction Thereof
1. Gain-Slope Tests
2. C-Notched Noise Tests
3. Any Other Agreed to Tests

See rates for Additional Labor as set for in 14.5.2(C).

D. Additional Cooperative Acceptance Testing –
Special Access

1. Tesing Periods – Each Half Hour or Fraction Thereof
Basic Time, Overtime* and Premium Time*

See rates for Additional Labor as set forth in 14.5.2(C).

* A call-out of a Telephone Company employee at a time not consecutive with the employee's scheduled workii period is subject to a minimum charge of four hours.

** 1004 Hz Loss, C-Message Noise and Balance are non-chargeable routine tests; however, they may be requested on an as needed or more than routine schedule basis, in which case the charges herein apply.

RECEIVED
APR 21 2014
STATE OF ALASKA
REGULATORY COMMISSION OF ALASKA

14. Rates and Charges (Cont'd)

14.5 Additional Engineering, Additional Labor And Miscellaneous Service (Cont'd)
Reference Tariff Section 9

14.5.3 Miscellaneous Services - (Cont'd)

E. Additional Manual Testing – Special Access

1. Testing Periods – Each Half Hour Or Fraction Thereof
   Basic Time, Overtime* and Premium Time*

   See rates for Additional Labor as set forth in 14.5.2(C).

F. Maintenance of Service (T)

1. Maintenance of Service Periods – Each Half Hour or Fraction Thereof
   Basic Time, Overtime* and Premium Time*

   See rates for Additional Labor as set forth in 14.5.2(C).

Pursuant to U-13-130(7)

* A call-out of a Telephone Company employee at a time not consecutive with the employee's scheduled workin period is subject to a minimum charge of four hours.

RECEIVED
OCT 27 2022
STATE OF ALASKA
REGULATORY COMMISSION OF ALASKA

NON-POOLED RATES FOR MATANUSKA TELECOM ASSOCIATION, INC. (T)

MTA 14.1 Carrier Common Line Access Service

A. Carrier Common Line Access Service provides for the use of MTA's common lines by interexchange carriers (IXC) for access to MTA's end users to furnish intrastate service.

Carrier Common Line Access is provided where MTA's end users subscribe to local exchange telephone service.

B. Limitations

1. A telephone number is not provided with Carrier Common Line Access.

2. Detail billing is not provided for Carrier Common Line Access.

3. Directory listings are not included in the rates and charges for Carrier Common Line Access.

4. Intercept arrangements are not included in the rates and charges for Carrier Common Line Access.

C. Undertaking of MTA

MTA will provide the use of MTA's common lines by an IXC for access to end users. The procedure for recovering the Carrier Common Line revenue requirement is set forth in these rules and regulations.

D. Obligations of the Customer

1. Any switched access service associated with Carrier Common Line Access shall be ordered under other sections of this tariff.

2. The IXC facilities at the premises of the ordering IXC shall provide the necessary on-hook and off- hook supervision.

RECEIVED
OCT 27 2022
STATE OF ALASKA
REGULATORY COMMISSION OF ALASKA

NON-POOLED RATES FOR MATANUSKA TELECOM ASSOCIATION, INC. (T)

MTA 14.1 Carrier Common Line Access Service (continued)

E. Rate Regulation

1. The Carrier Common Line Access Charge (CCL) will be billed as Essential Network Support (ENS) to the Alaska Universal Service Administrative Company (AUSAC) under this tariff in with the regulations set forth below.

2. Annual ENS is an amount equal to (i) the amount of carrier common line support received for the year ended December 31, 2016, plus (ii) the amount of carrier of last resort support Received for the year ended December 31, 2016. The ENS amount is frozen at that level. The monthly rate will be determined by dividing the annual ENS by twelve.

3. The Company will continue to use the frozen ENS amount, to be recovered from AUSAC pursuant to this tariff, in calculating the monthly ENS payable under this tariff until it is superseded by a subsequent order of the RCA.

RECEIVED
OCT 27 2022
STATE OF ALASKA
REGULATORY COMMISSION OF ALASKA

NON-POOLED RATES FOR MATANUSKA TELECOM ASSOCIATION, INC. (T)

MTA 14.1 Carrier Common Line Access Service (continued)

MTA 14.1.1 Carrier Common Line Access Service

Regulations concerning Carrier Common Line Access are set forth in 14.1 preceding.

MTA 14.1.2.a Recurring Charge – Carrier Common Line

This charge is billed to AUSAC as described in 14.1 preceding.

	Monthly Rate
Essential Network Support	$441,920

MTA 14.1.2.b Recurring Charge – Network Access Fee (NAF) $ 5.75 per line per month

This charge is applied to the end user for intrastate access as described in Section 4.1.

Issued By: Matanuska Telecom Association, Inc.
By: Larry G. Snipes Title: Manager, Regulatory Affairs
Larry G. Snipes

RECEIVED
OCT 27 2022
STATE OF ALASKA
REGULATORY COMMISSION OF ALASKA

NON-POOLED RATES FOR MATANUSKA TELECOM ASSOCIATION, INC. (T)

MTA 14.2 Switched Access Service

47 CFR § 51.909 required Transitional Intrastate Access Service (TIAS) rates be Subject to the same rates and rate structure as functionally equivalent interstate Rates, effective July 1, 2016.

MTA 14.2.1 Nonrecurring Charges	Rate
A. Access Order	$ 86.00
B. Service Date Change Charge	$ 60.00
C. Design Change Charge	$ 84.00
D. Miscellaneous Service Order Charge, per occurrence	$ 123.00
E. Trunk Activation Per Order	$ 490.64
F. Transport Installation per Entrance Facility	
1. Voice Grade Two Wire	$ 481.03
2. High Capacity DS1	$ 352.76
3. High Capacity DS3	$ 475.69
4. ESALT 2 Mbps	$ 570.09
5. ESALT 10 Mbps	$ 570.09
6. ESALT 50 Mbps	$ 570.09
G. Interim NXX Translation per Order	$ 235.17
H. Telecommunications Service Priority Change per Circuit	$ 61.74
I. ESALT Direct Trunked Termination, per ESALT Direct Trunked Termination Installed	$ 375.60
J. ESALT Entrance Facility Protection, per ESALT Entrance Facility	$ 576.26

Pursuant to U-22-028(3) Effective: September 30, 2022

Issued By: Matanuska Telecom Association, Inc.

By: Larry G. Snipes Title: Manager, Regulatory Affairs
Larry G. Snipes

RECEIVED
OCT 27 2022
STATE OF ALASKA
REGULATORY COMMISSION OF ALASKA

NON-POOLED RATES FOR MATANUSKA TELECOM ASSOCIATION, INC. (T)

MTA 14.2 Switched Access Service, continued

MTA 14.2.2 Recurring Charges

	Rate
A. Entrance Facility, per termination	
1. Voice Grade Two Wire	$ 30.97
2. High Capacity DS1	$ 151.00
3. High Capacity DS3	$ 1,378.77
4. ESALT 2 Mbps	$ 267.45
5. ESALT 10 Mbps	$ 288.27
6. ESALT 50 Mbps	$ 373.47

7. Collocation

The Entrance Facility charge specified in Section 6.2 of this tariff will not apply when: 1) the customer designated premises and the serving wire center are physically (including caged, cageless, shared and adjacent arrangements) or virtually collocated as those terms are used in 47 CFR 51.323, and (2) the customer obtains collocation for the purpose of interconnection with the Telephone Company's network for the transmission and routing of telephone exchange service, exchange access or both, and for the purpose of providing local exchange or exchange access services to its customers.

B. Direct Trunked Transport – DS1, DS3, ESALT	
1. Direct Trunked Transport Facility, per mile	
a. High Capacity DS1	$ 10.34
b. High Capacity DS3	$ 90.12
2. Direct Trunked Transport Facility, per DTF-E1 Facility	
a. ESALT 2 Mbps	$ 30.47
b. ESALT 10 Mbps	$ 77.27
c. ESALT 50 Mbps	$ 216.35

RECEIVED
June 28, 2023
STATE OF ALASKA
REGULATORY COMMISSION OF ALASKA

NON-POOLED RATES FOR MATANUSKA TELECOM ASSOCIATION, INC.

MTA 14.2 Switched Access Service, continued

MTA 14.2.2 Recurring Charges, continued

	Rate	
B. Direct Trunked Transport – DS1, DS3, ESALT, continued		
3. Direct Trunked Transport Facility, per DTF-E2 Facility		
a. ESALT 2 Mbps	$ 20.32	
b. ESALT 10 Mbps	$ 46.37	
c. ESALT 50 Mbps	$ 144.24	
4. Direct Trunked Transport Termination, per termination		
a. High Capacity DS1	$ 53.68	
b. High Capacity DS3	$ 344.68	
c. ESALT 2 Mbps	$ 71.11	
d. ESALT 10 Mbps	$ 86.93	
e. ESALT 50 Mbps	$ 106.24	
C. Terminating Tandem Switched Transport Access Service		
1. Terminating Tandem Switched Transport Facility	$ 0.000283	
2. Terminating Tandem Switched Termination	$ 0.001473	
C2. Originating Toll Free Joint Tandem Switched Transport	$ 0.001	
D. Common Transport per Originating Non-Toll Free Minute of Use	$ 0.001	
E. Local Switching		
1. Terminating	$ 0.000000	
2. Originating Non-Toll Free Rate	$ 0.010	
3. Originating Toll Free Rate	$ 0.000000	(R)
F. Information Surcharge, Premium, per 100 minutes		
1. Terminating	$ 0.000000	
2. Originating Non-Toll Free Rate	$ 0.382	
3. Originating Toll Free Rate	$ 0.000000	(R)

RECEIVED
June 28, 2023
STATE OF ALASKA
REGULATORY COMMISSION OF ALASKA

NON-POOLED RATES FOR MATANUSKA TELECOM ASSOCIATION, INC.

MTA 14.2 Switched Access Service, continued

MTA 14.2.2 Recurring Charges, continued

		Rate	
G. 800 Data Base Access Service Query (Equal Access), per query	$	0.0002	(R)
H. Multiplexing, per arrangement			
1. DS1 to Voice	$	121.42	
2. DS3 to DS1	$	314.49	
I. ESALT Real Time CoS / QoS, per ESALT Direct Trunked Facility, per option			
1. ESALT 2 Mbps	$	5.82	
2. ESALT 10 Mbps	$	29.10	
3. ESALT 50 Mbps	$	90.57	
J. ESALT Entrance Facility Protection, per ESALT Entrance Facility			
1. ESALT 2 Mbps	$	187.35	
2. ESALT 10 Mbps	$	187.35	
3. ESALT 50 Mbps	$	187.35	

MTA 14.2.3 Presubscription Change Charge, per line or trunk

1. Per intraLATA PIC change, submitted manually	$	5.50
2. Per intraLATA PIC change, submitted manually with a simultaneous interLATA PIC change	$	1.25

MTA 14.2.4 Meet Point Billing

When a Switched Access Service is provided by more than one telephone company, ordering and billing will be provided under the terms described in Tariff FCC No. 5 sections 2.4.7 and 5.3.

RECEIVED
OCT 27 2022
STATE OF ALASKA
REGULATORY COMMISSION OF ALASKA

NON-POOLED RATES FOR MATANUSKA TELECOM ASSOCIATION, INC. (T)

MTA 14.3 Special Access Service

MTA 14.3.3.1a Surcharge for Special Access Service $ 25.00 per voice grade equivalent
Regulations concerning charges associated with Surcharge for Special Access Service are set forth in section 7.3.

MTA 14.3.3.1b Telecommunications Service Priority Charge
Regulations concerning charges associated with Surcharge for Miscellaneous Service are set forth in section 9.3.

A. Recurring Charge $ 1.00 per circuit per month

B. Nonrecurring $ 55.00

MTA 14.3.1c Special Access Ordering
Regulations concerning charges associated with Access Ordering are set forth in sections 5.2 and 5.8.

A. Access Order Charge $ 93.00

B. Service Date Change Charge $ 44.00
Service Date Change Charge will apply, on a per order per occurrence basis, for each service changed. The Access Order Charge as specified in MTA 14.3.3.1c(A) does not apply.

C. Design Change Charge $ 44.00
The Design Change Charge will apply on a per order per occurrence basis, for each order requiring design change.

D. Miscellaneous Service Order Charge $ 44.00
Regulations concerning charges associated with Access Ordering are set forth in sections 5.2 and 5.8

Issued By: Matanuska Telecom Association, Inc.

By: Larry G. Snipes Title: Manager, Regulatory Affairs
Larry G. Snipes

RECEIVED
OCT 27 2022
STATE OF ALASKA
REGULATORY COMMISSION OF ALASKA

NON-POOLED RATES FOR MATANUSKA TELECOM ASSOCIATION, INC. (T)

MTA 14.3 Special Access Service (continued)

MTA 14.3.2 Voice Grade Service

Regulations concerning Voice Grade are set forth in section 7.4.

A. Channel Terminations

1. Collocation

The Channel Termination charge specified in Section7.2.1(A) of this tariff will not apply when: 1) the customer designated premises and the serving wire center are physically (including caged, cageless, shared and adjacent arrangements) or virtually collocated as those terms are used in 47 CFR 51.323, and (2) the customer obtains collocation for the purpose of interconnection with the Telephone Company's network for the transmission and routing of telephone exchange service, exchange access or both, and for the purpose of providing local exchange or exchange access services to its customers.

2. Voice Grade 2-Wire	$ 54.94 per termination per month
3. Voice Grade 4-Wire	$ 87.90 per termination per month
4. Nonrecurring Charge (2W and 4W)	$ 216.65

B. Channel Mileage

1. Channel Mileage Facility (2W and 4W)	$ 3.91 per mile
2. Channel Mileage Termination (2W and 4W)	$ 39.33 per termination

C. Optional Features and Functions

1. Bridging

a. Voice Bridging (2W and 4W)	$ 2.61 per port per month
b. Data Bridging (2W and 4W)	$ 2.61 per port per month

2. Conditioning

a. C-Type	$ 6.42 per termination per month
b. Intentionally left blank.	
c. Intentionally left blank.	
d. Data Capability	$ 4.41 per termination per month

Issued By: Matanuska Telecom Association, Inc.

By: Larry G. Snipes Title: Manager, Regulatory Affairs

Larry G. Snipes

RECEIVED
OCT 27 2022
STATE OF ALASKA
REGULATORY COMMISSION OF ALASKA

NON-POOLED RATES FOR MATANUSKA TELECOM ASSOCIATION, INC. (T)

MTA 14.3 Special Access Service (continued)

MTA 14.3.2 Voice Grade Service (continued)

C. Optional Features and Functions (continued)

3. Improved Return Loss for Effective Two-Wire to Four-Wire Transmission

a. 2-Wire and 4-Wire $ 11.40 per termination per month

4. Intentionally left blank.

5. Intentionally left blank.

6. Signaling Capability

a. Signaling Capability $ 11.54 per termination per month

MTA 14.3.3 Digital Data Service

Regulations concerning Digital Data Service are set forth in section 7.7.

A. Channel Termination

1. Collocation

The Channel Termination charge specified in Section7.2.1(A) of this tariff will not apply when: 1) the customer designated premises and the serving wire center are physically (including caged, cageless, shared and adjacent arrangements) or virtually collocated as those terms are used in 47 CFR 51.323, and (2) the customer obtains collocation for the purpose of interconnection with the Telephone Company's network for the transmission and routing of telephone exchange service, exchange access or both, and for the purpose of providing local exchange or exchange access services to its customers.

2. 2.4 Kbps to 64.0 Kbps $ 101.39 per termination per month

3. Nonrecurring Charge (2.4 Kbps to 64.0 Kbps) $ 259.31

B. Channel Mileage

1a. Channel Mileage Facility (2.4 Kbps to 19.2 Kbps) $ 3.73 per mile

1b. Channel Mileage Facility (56 Kbps to 64 Kbps) $ 5.28 per mile

2a. Channel Mileage Termination (2.4 Kbps to 19.2 Kbps) $ 37.35 per termination

2b. Channel Mileage Termination (56 Kbps to 64 Kbps) $ 52.94 per termination

Pursuant to U-22-028(3)

Effective: September 30, 2022

Issued By: Matanuska Telecom Association, Inc.

By: Larry G. Snipes Title: Manager, Regulatory Affairs

Larry G. Snipes

RECEIVED
OCT 27 2022
STATE OF ALASKA
REGULATORY COMMISSION OF ALASKA

NON-POOLED RATES FOR MATANUSKA TELECOM ASSOCIATION, INC. (T)

MTA 14.3 Special Access Service (continued)

MTA 14.3.3 Digital Data Service (continued)

C. Optional Features and Functions

1. Bridging	$ 2.02 per port
2. Intentionally Left Blank.	
3. Public Packet Switching Network	Individual Case Basis

MTA 14.3.4 High Capacity Service

Regulations concerning High Capacity Service are set forth in section 7.8.

A. Channel Termination

1. Collocation

The Channel Termination charge specified in Section7.2.1(A) of this tariff will not apply when: 1) the customer designated premises and the serving wire center are physically (including caged, cageless, shared and adjacent arrangements) or virtually collocated as those terms are used in 47 CFR 51.323, and (2) the customer obtains collocation for the purpose of interconnection with the Telephone Company's network for the transmission and routing of telephone exchange service, exchange access or both, and for the purpose of providing local exchange or exchange access services to its customers.

2. CT at 1.544 Mbps	$ 287.50 per termination per month
3. Nonrecurring 1.544 Mbps	$ 396.76
4. CT at 3.152 Mbps to 6.312 Mbps	Individual Case Basis
5. Nonrecurring at 3.152 Mbps to 6.312 Mbps	Individual Case Basis
6. CT at 44.736 Mbps	Individual Case Basis
7. Nonrecurring at 44.736 Mbps	Individual Case Basis
8. CT at 274.176 Mbps	Individual Case Basis
9. Nonrecurring at 274.176 Mbps	Individual Case Basis

Issued By: Matanuska Telecom Association, Inc.

By: Larry G. Snipes Title: Manager, Regulatory Affairs

RECEIVED
OCT 27 2022
STATE OF ALASKA
REGULATORY COMMISSION OF ALASKA

NON-POOLED RATES FOR MATANUSKA TELECOM ASSOCIATION, INC. (T)

MTA 14.3 Special Access Service (continued)

MTA 14.3.4 High Capacity Service (continued)

B. Channel Mileage (continued)

1. Channel Mileage Facility (CMF)

a. CMF at 64 Kbps	$ 3.71 per mile
b. CMF at 1.544 Mbps	$ 19.69 per mile
c. CMF at 3.152 Mbps and Up	Individual Case Basis

2. Channel Mileage Termination (CMT)

a. CMT at 64 Kbps	$ 37.22 per termination per month
b. CMT at 1.544 Mbps	$102.19 per termination per month
c. CMT at 3.152 Mbps and Up	Individual Case Basis

C. Optional Features and Functions

1. Multiplexing

a. DS4 to DS1	Individual Case Basis
b. DS3 to DS1	$ 422.63 per arrangement per month
c. DS2 to DS1	Individual Case Basis
d. DS1C to DS1	Individual Case Basis
e. DS1 to Voice*	$ 222.05 per arrangement per month
f. DS1 to DS0	$ 351.60 per arrangement per month
g. DS0 Subrate -Up to 20 2.4 Kbps Services	$ 347.50 per month
h. DS0 Subrate -Up to 10 4.8 Kbps Services	$ 236.12 per month
i. DSO Subrate -Up to 5 9.6 Kbps Services	$ 209.39 per month

2. Automatic Loop Transfer

a. Monthly Rate	$ 140.78 per arrangement

* A channel of this DS1 hub can be used for Digital Data Service.

Pursuant to U-22-028(3)

Effective: September 30, 2022

Issued By: Matanuska Telecom Association, Inc.

By: Larry G. Snipes Title: Manager Regulatory Affairs

Larry G. Snipes

RECEIVED
OCT 27 2022
STATE OF ALASKA
REGULATORY COMMISSION OF ALASKA

NON-POOLED RATES FOR MATANUSKA TELECOM ASSOCIATION, INC. (T)

MTA 14.4 Intentionally Left Blank

MTA 14.5 Additional Engineering, Labor, and Miscellaneous Services*
Applies to all Services Except Switched Access.
See Section MTA 14.6 for Switched Access Additional Engineering, Labor, and Miscellaneous Services.

MTA 14.5.1 Additional Labor

A. Journeyman Engineer

1. Basic Time	$ 45.53 per half-hour or fraction thereof
2. Overtime	$ 48.79 per half-hour or fraction thereof
3. Premium Time	$ 60.47 per half-hour or fraction thereof

B. Journeyman Telephone Technician

1. Basic Time	$ 46.20 per half-hour or fraction thereof
1. Overtime	$ 49.25 per half-hour or fraction thereof
2. Premium Time	$ 60.62 per half-hour or fraction thereof

C. Assigner

1. Basic Time	$ 46.20 per half-hour or fraction thereof
2. Overtime	$ 49.25 per half-hour or fraction thereof
3. Premium Time	$ 60.62 per half-hour or fraction thereof

D. Business Services Consultant

1. Basic Time	$ 25.92 per half-hour or fraction thereof
2. Overtime	$ 26.20 per half-hour or fraction thereof
3. Premium Time	$ 33.26 per half-hour or fraction thereof

*A call-out of a Telephone Company employee at a time not consecutive with the employee's scheduled working period is subject to a minimum charge of four hours.

Pursuant to U-22-028(3) Effective: September 30, 2022

Issued By: Matanuska Telephone Association, Inc.

By: Larry G. Snipes Title: Manager, Regulatory Affairs
Larry G. Snipes

RCA No. 999	Fifth Revised Sheet MTA-11
	Cancelling: Fourth Revised Sheet MTA-11
TELEPHONE EXCHANGE CARRIERS OF ALASKA	

RECEIVED
OCT 27 2022
STATE OF ALASKA
REGULATORY COMMISSION OF ALASKA

NON-POOLED RATES FOR MATANUSKA TELEPHONE ASSOCIATION, INC. (T)

MTA 14.6 Additional Engineering, Labor, and Miscellaneous Services – Switched Access Each Half Hour, or Fraction Thereof.

	Rate
MTA 14.6.1 Additional Engineering Periods, Each Half Hour, or Fraction Thereof.	
A. Basic Time, per engineer	$ 31.03
B. Overtime, per engineer	$ 46.55
C. Premium Time, per engineer	$ 62.02
MTA 14.6.2 Additional Labor Periods*	
A. Installation or Repair	
1. Overtime, per technician	$ 47.57
2. Premium Time, per technician	$ 63.42
B. Stand by	
1. Basic Time, per technician	$ 21.18
2. Overtime, per technician	$ 31.77
3. Premium Time, per technician	$ 42.36
C. Testing and Maintenance, Installation and Repair	
1. Basic Time, per technician	$ 31.71
2. Overtime, per technician	$ 47.57
3. Premium Time, per technician	$ 63.42
D. Central Office Maintenance Technician	
1. Basic Time, per technician	$ 34.66
2. Overtime, per technician	$ 51.99
3. Premium Time, per technician	$ 69.32

*A call-out of a Telephone Company employee at a time not consecutive with the employee's scheduled working period is subject to a minimum charge of four hours.

Pursuant to U-22-028(3) Effective: September 30, 2022

Issued By: Matanuska Telecom Association, Inc.
By: Larry G. Snipes Title: Manager, Regulatory Affairs
Larry G. Snipes